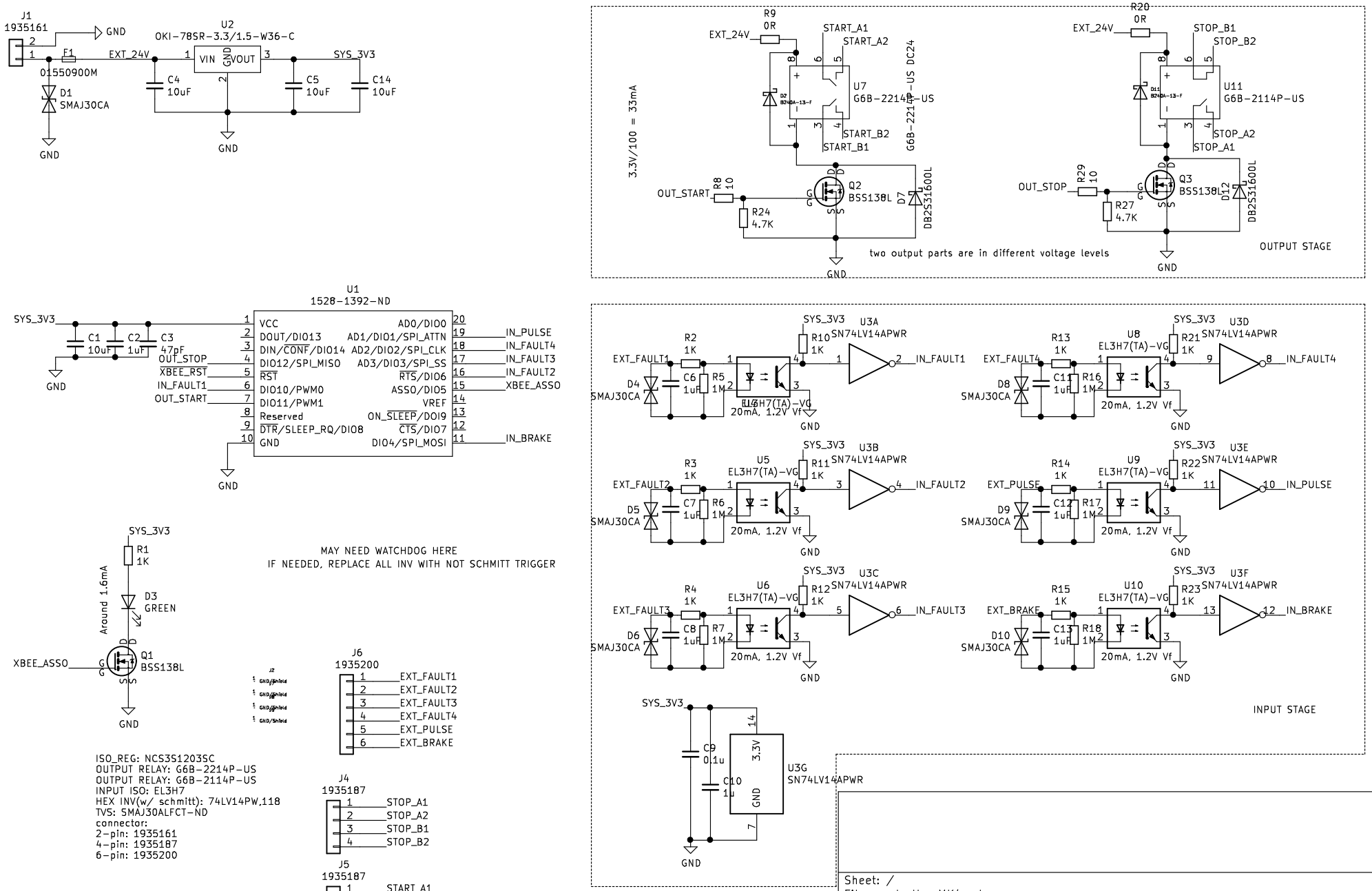
J1
1935161
GND
F1
01550900M
EXT_24V
D1
SMAJ30CA
U2
OKI-78SR-3.3/1.5-W36-C
VIN
GND
VOUT
SYS_3V3
C4
10uF
C5
10uF
C14
10uF
R9
0R
EXT_24V
START_A1
START_A2
U7
G6B-2214P-US
START_B2
START_B1
3.3V/100 = 33mA
OUT_START
R8
10
R24
4.7K
Q2
BSS138L
D7
DB2S31600L
two output parts are in different voltage levels
R20
0R
EXT_24V
STOP_B1
STOP_B2
U11
G6B-2114P-US
STOP_A2
STOP_A1
OUT_STOP
R29
10
R27
4.7K
Q3
BSS138L
D12
DB2S31600L
OUTPUT STAGE
U1
1528-1392-ND
SYS_3V3
C1
10uF
C2
1uF
C3
47pF
VCC
DOUT/DIO13
DIN/CONF/DIO14
DIO12/SPI_MISO
RST
DIO10/PWM0
DIO11/PWM1
Reserved
DTR/SLEEP_RQ/DIO8
GND
AD0/DIO0
AD1/DIO1/SPI_ATTN
AD2/DIO2/SPI_CLK
AD3/DIO3/SPI_SS
RTS/DIO6
ASS0/DIO5
VREF
ON_SLEEP/DOI9
CTS/DIO7
DIO4/SPI_MOSI
OUT_STOP
XBEE_RST
IN_FAULT1
OUT_START
IN_PULSE
IN_FAULT4
IN_FAULT3
IN_FAULT2
XBEE_ASSO
IN_BRAKE
EXT_FAULT1
R2
1K
C6
1uF
R5
1M
D4
SMAJ30CA
U5
EL3H7(TA)-VG
20mA, 1.2V Vf
R10
1K
U3A
SN74LV14APWR
IN_FAULT1
EXT_FAULT4
R13
1K
C11
1uF
R16
1M
D8
SMAJ30CA
U8
EL3H7(TA)-VG
R21
1K
U3D
SN74LV14APWR
IN_FAULT4
EXT_FAULT2
R3
1K
C7
1uF
R6
1M
D5
SMAJ30CA
U5
EL3H7(TA)-VG
R11
1K
U3B
SN74LV14APWR
IN_FAULT2
EXT_PULSE
R14
1K
C12
1uF
R17
1M
D9
SMAJ30CA
U9
EL3H7(TA)-VG
R22
1K
U3E
SN74LV14APWR
IN_PULSE
EXT_FAULT3
R4
1K
C8
1uF
R7
1M
D6
SMAJ30CA
U6
EL3H7(TA)-VG
R12
1K
U3C
SN74LV14APWR
IN_FAULT3
EXT_BRAKE
R15
1K
C13
1uF
R18
1M
D10
SMAJ30CA
U10
EL3H7(TA)-VG
R23
1K
U3F
SN74LV14APWR
IN_BRAKE
INPUT STAGE
SYS_3V3
C9
0.1u
C10
1u
3.3V
GND
U3G
SN74LV14APWR
SYS_3V3
R1
1K
D3
GREEN
Around 1.6mA
XBEE_ASSO
Q1
BSS138L
MAY NEED WATCHDOG HERE
IF NEEDED, REPLACE ALL INV WITH NOT SCHMITT TRIGGER
J6
1935200
EXT_FAULT1
EXT_FAULT2
EXT_FAULT3
EXT_FAULT4
EXT_PULSE
EXT_BRAKE
J4
1935187
STOP_A1
STOP_A2
STOP_B1
STOP_B2
J5
1935187
START_A1
START_A2
START_B1
START_B2
ISO_REG: NCS3S1203SC
OUTPUT RELAY: G6B-2214P-US
OUTPUT RELAY: G6B-2114P-US
INPUT ISO: EL3H7
HEX INV(w/ schmitt): 74LV14PW,118
TVS: SMAJ30ALFCT-ND
connector:
2-pin: 1935161
4-pin: 1935187
6-pin: 1935200
Sheet: /
File: controller_MK4.sch
Title: turbine controller mk1
Size: A4
Date: 2018-04-24
Rev: 0.1
KiCad E.D.A. kicad 5.0.0-rc2-dev-unknown-26ee67364ubuntu16.04.1
Id: 1/1