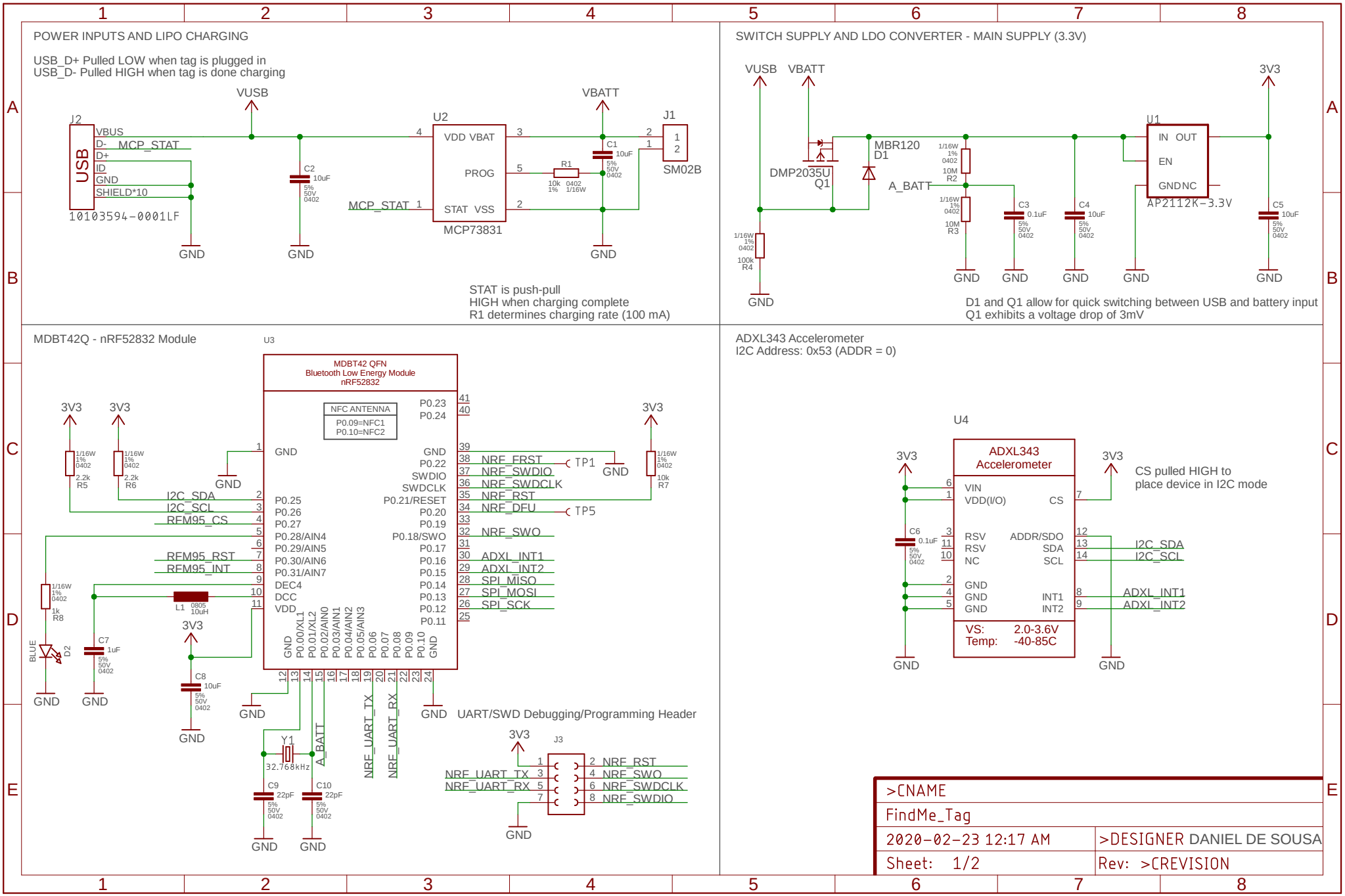
POWER INPUTS AND LIPO CHARGING
USB_D+ Pulled LOW when tag is plugged in
USB_D- Pulled HIGH when tag is done charging
J2
USB
VBUS
D- MCP_STAT
D+
ID
GND
SHIELD*10
10103594-0001LF
VUSB
C2 10uF 5% 50V 0402
U2
VDD VBAT
PROG
STAT VSS
MCP73831
MCP_STAT
R1 10k 1% 0402 1/16W
C1 10uF 5% 50V 0402
VBATT
J1
SM02B
STAT is push-pull
HIGH when charging complete
R1 determines charging rate (100 mA)
SWITCH SUPPLY AND LDO CONVERTER - MAIN SUPPLY (3.3V)
VUSB VBATT
DMP2035U Q1
MBR120 D1
A_BATT
R2 10M 1% 0402 1/16W
R3 10M 1% 0402 1/16W
R4 100k 1% 0402 1/16W
C3 0.1uF 5% 50V 0402
C4 10uF 5% 50V 0402
U1
IN OUT
EN
GND NC
AP2112K-3.3V
C5 10uF 5% 50V 0402
3V3
D1 and Q1 allow for quick switching between USB and battery input
Q1 exhibits a voltage drop of 3mV
MDBT42Q - nRF52832 Module
U3
MDBT42 QFN
Bluetooth Low Energy Module
nRF52832
NFC ANTENNA
P0.09=NFC1
P0.10=NFC2
R5 2.2k 1/16W 1% 0402
R6 2.2k 1/16W 1% 0402
R7 10k 1/16W 1% 0402
R8 1k 1/16W 1% 0402
I2C_SDA
I2C_SCL
RFM95_CS
RFM95_RST
RFM95_INT
NRF_FRST
NRF_SWDIO
NRF_SWDCLK
NRF_RST
NRF_DFU
NRF_SWO
ADXL_INT1
ADXL_INT2
SPI_MISO
SPI_MOSI
SPI_SCK
TP1
TP5
L1 0805 10uH
D2 BLUE
C7 1uF 5% 50V 0402
C8 10uF 5% 50V 0402
Y1 32.768kHz
C9 22pF 5% 50V 0402
C10 22pF 5% 50V 0402
NRF_UART_TX
NRF_UART_RX
UART/SWD Debugging/Programming Header
J3
NRF_RST
NRF_SWO
NRF_SWDCLK
NRF_SWDIO
ADXL343 Accelerometer
I2C Address: 0x53 (ADDR = 0)
U4
ADXL343 Accelerometer
VIN
VDD(I/O)
CS
RSV
RSV
NC
ADDR/SDO
SDA
SCL
GND
GND
GND
INT1
INT2
VS: 2.0-3.6V
Temp: -40-85C
C6 0.1uF 5% 50V 0402
CS pulled HIGH to
place device in I2C mode
ADXL_INT1
ADXL_INT2
>CNAME
FindMe_Tag
2020-02-23 12:17 AM
>DESIGNER DANIEL DE SOUSA
Sheet: 1/2
Rev: >CREVISION

RFM95W LoRa Transciever

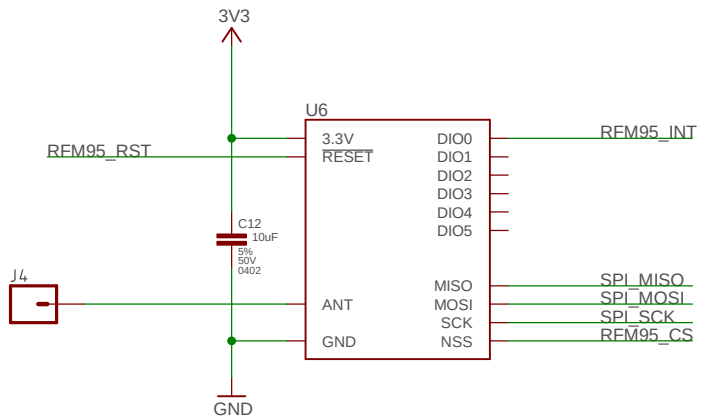

Add a hole for antenna mech. stability

Resistors not needed on CS and RST

SAM-M8Q GPS
I2C ADDRESS: 0x42 (can be changed in SW)

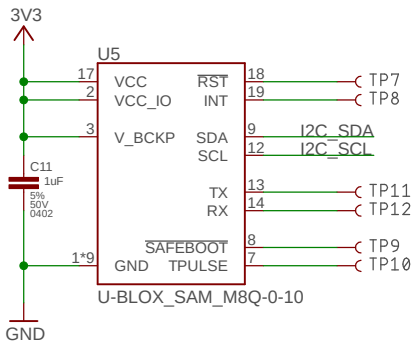

>CNAME	
FindMe_Tag	
2020-02-23 12:17 AM	>DESIGNER DANIEL DE SOUSA
Sheet: 2/2	Rev: >CREVISION