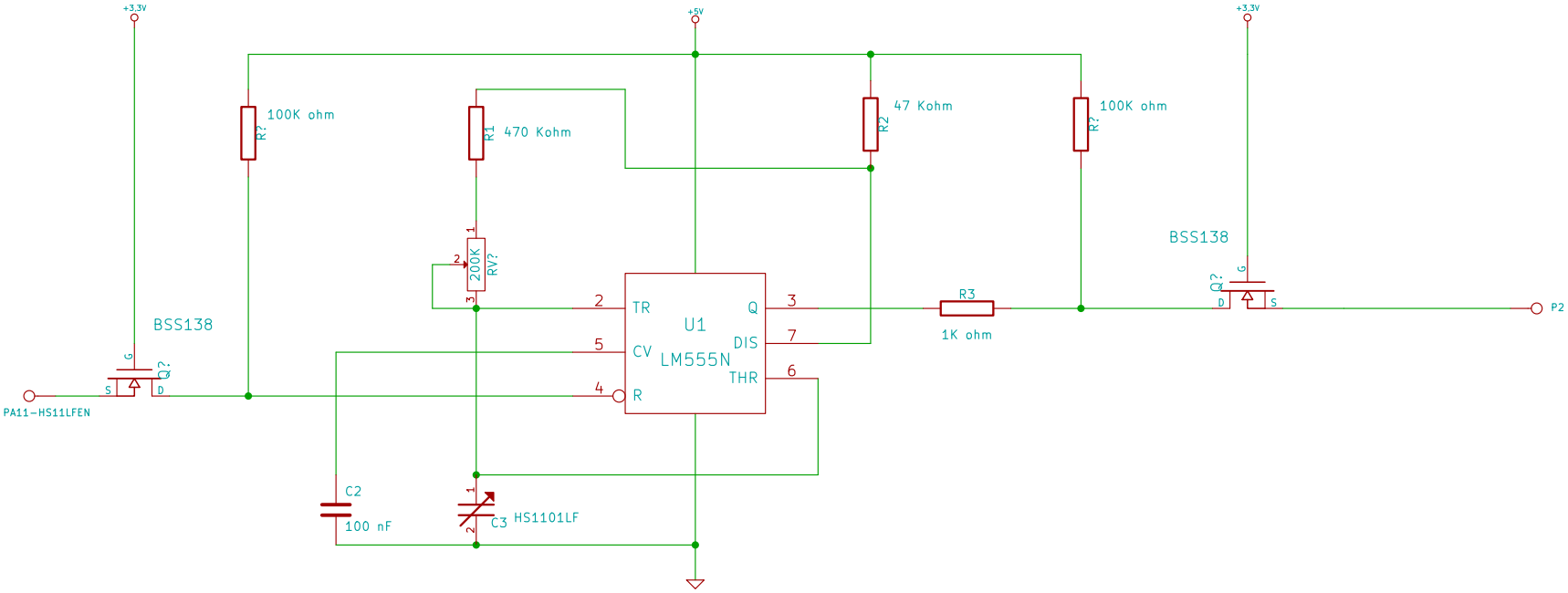

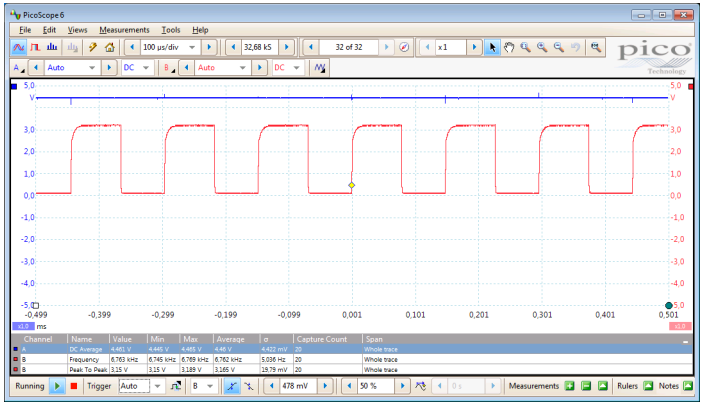

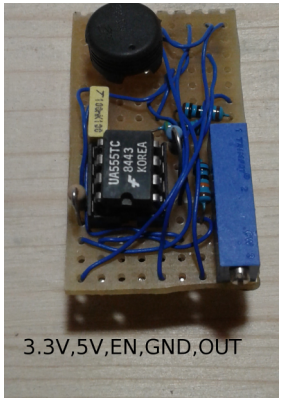

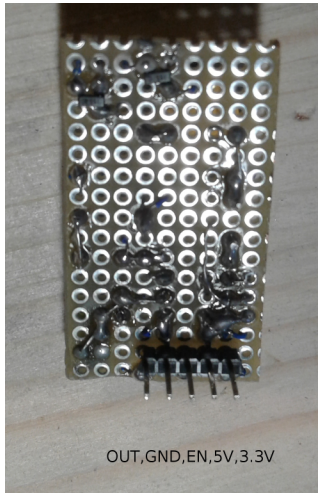

File: humidity.sch		
Sheet: /		
Title: Igrometro		
Size: A4	Date: 26 aug 2017	Rev:
KiCad E.D.A.		Id: 1/1