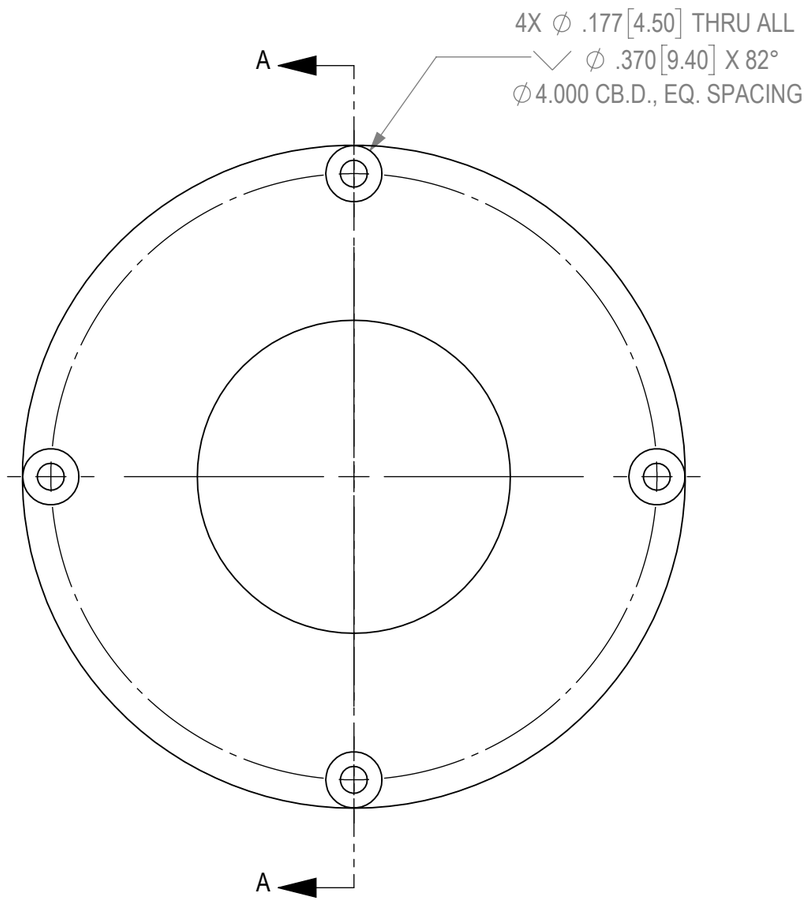


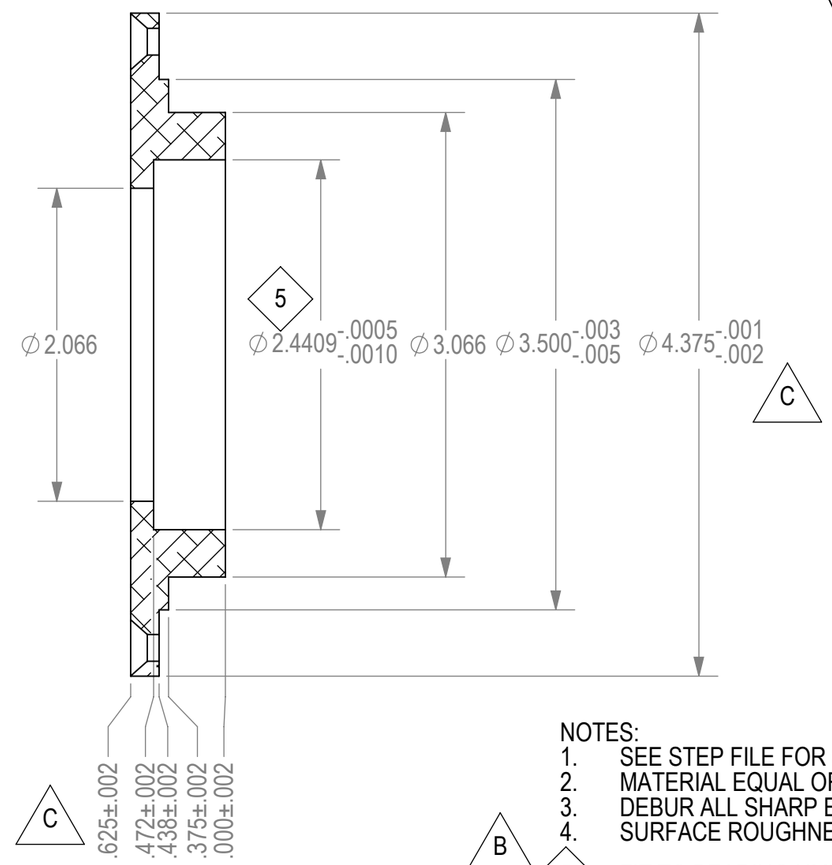


SECTION A-A

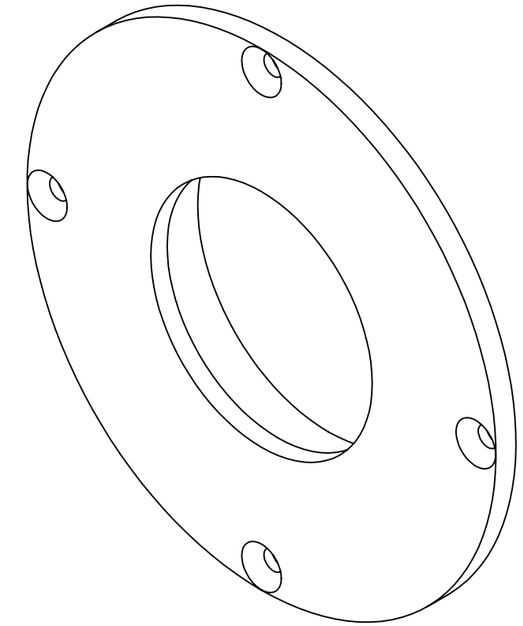

NOTES:
1. SEE STEP FILE FOR COMPLETE PROFILE.
2. MATERIAL EQUAL OR GREATER THAN SPECIFIED.
3. DEBUR ALL SHARP EDGES.
4. SURFACE ROUGHNESS 125uin OR BETTER. NO FINISH REQUIRED.
5. FIT TO BEARING HMK5012 FROM MISUMI USA.

| REV | DESCRIPTION | DR | DATE | BY |
|---|---|---|---|---|
| C | INCREASED TOLERANCES | | 2018 NOV 27 | DF |
| B | DECREASED TOLERANCES | | 2018 NOV 18 | DF |
| A | FIRST ISSUE | 1000 | 2018 NOV 03 | DF |

REVISIONS

USST

THIS DRAWING AND ALL INFORMATION CONTAINED HEREIN IS PROPIETARY TO THE USST. ANY USE OR REPRODUCTION OF THIS DRAWING BY OTHER PARTIES REQUIRES THE WRITTEN PERMISSION OF THE USST.

UNLESS OTHERWISE SPECIFIED, DIMENSIONS ARE IN INCHES

TOLERANCES ARE:
FRACTIONS ± 1/16 DECIMALS .XX ± .01 .XXX ± .005 ANGLES ± 1°

CLICK HERE FOR GENERAL TORQUE SPECS: 179053

THIRD ANGLE PROJECTION

| APPROVALS | | DATE (YYYY-MMM-DD) |
|---|---|---|
| DRAWN | DANIEL F | 2018 NOV 03 |
| CHECKED | | |
| DXF | DANIEL F | 2018 NOV 18 |

MATERIAL 5052-H32

WEIGHT 0.3 LB AREA N/A

TITLE:
SHOULDER DRIVE RETAINING CAP

SIZE B DWG. NO. ARM1819-P009C REV. C

SCALE NTS TYPE ARM SHEET 1 OF 1

SOLIDWORKS Educational Product. For Instructional Use Only.