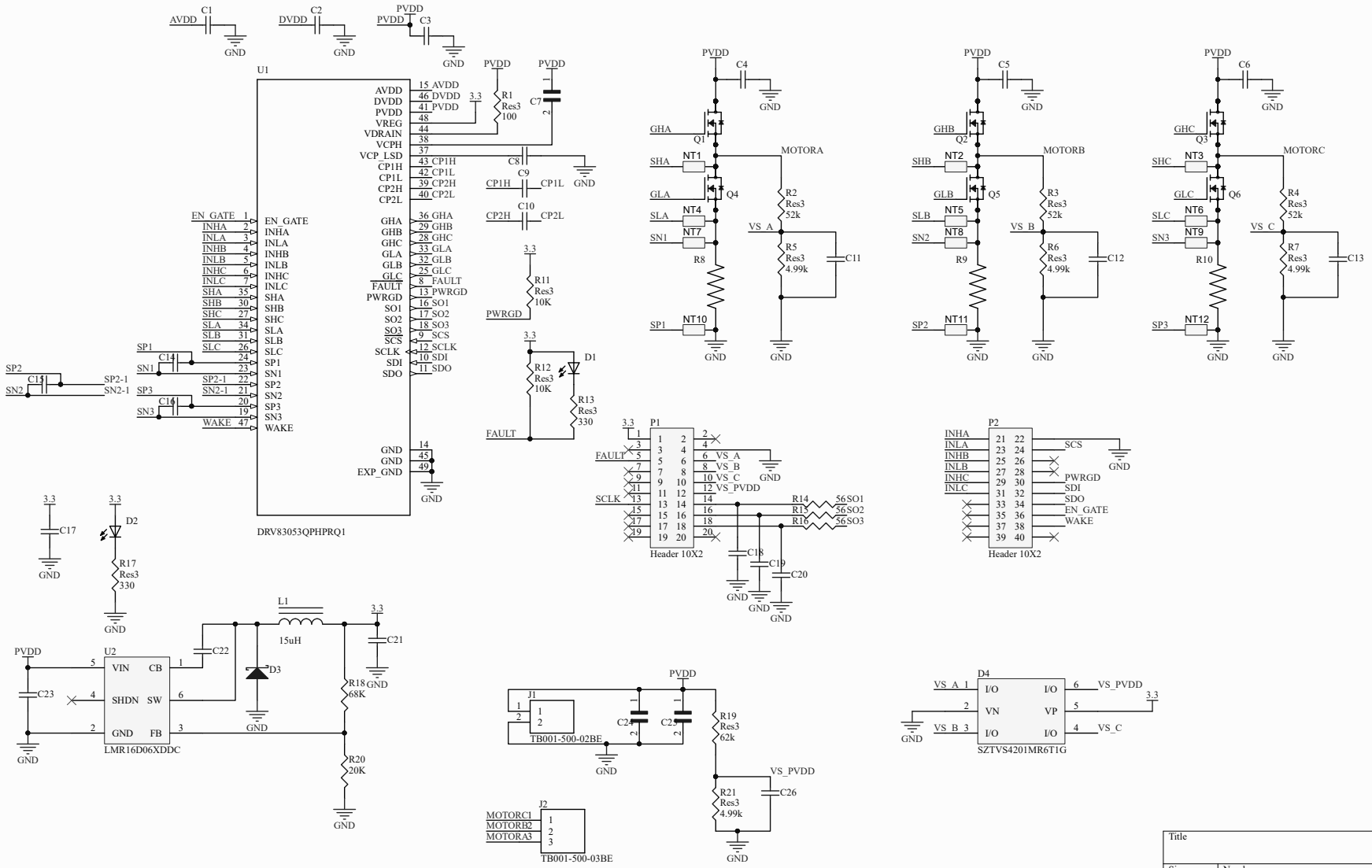

Title		
Size B	Number	Revision
Date: 1/29/2020	Sheet	of
File: C:\Users\..\ESchematic.SchDoc	Drawn By:	