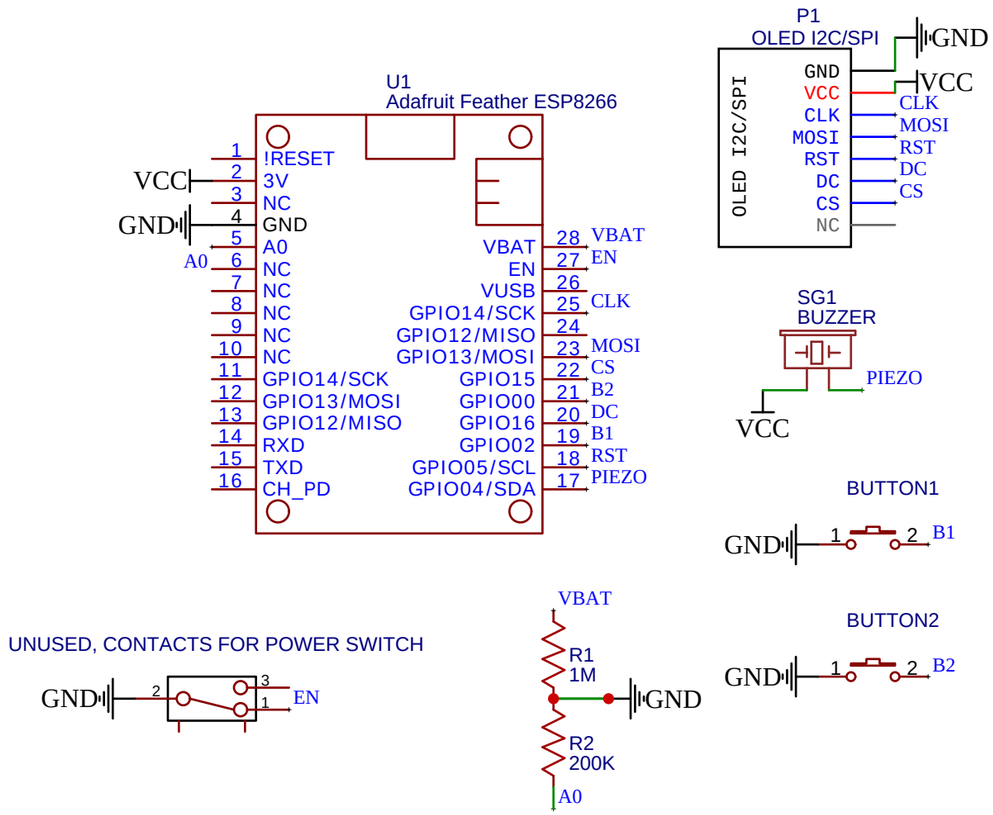

TITLE: Pager Schematic		REV: 1.0
EasyEDA	Company: Your Company	Sheet: 1/1
	Date: 2025-07-07 Drawn By: danieliscrazy	