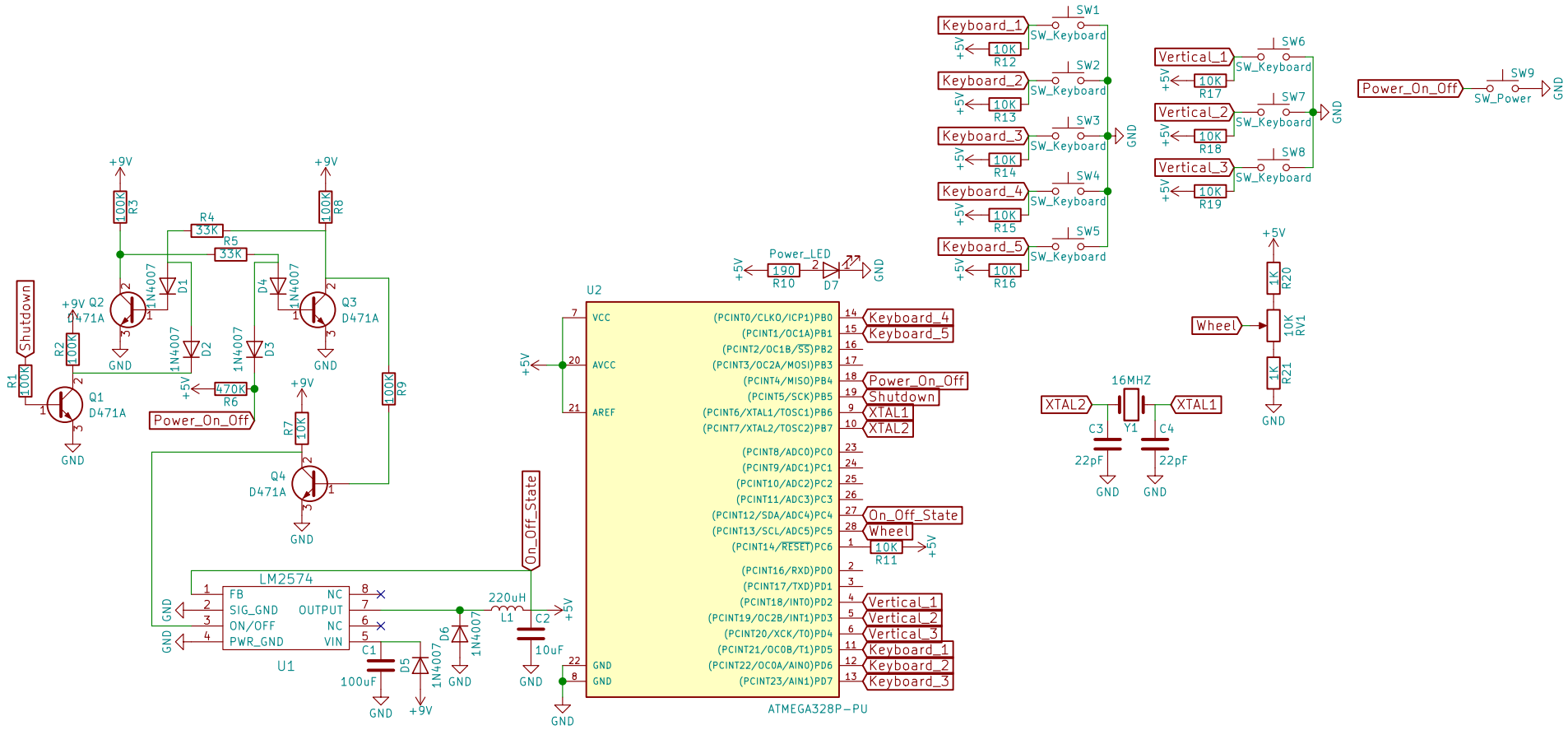
Keyboard_1
Keyboard_2
Keyboard_3
Keyboard_4
Keyboard_5
Vertical_1
Vertical_2
Vertical_3
Power_On_Off
Shutdown
Wheel
On_Off_State
XTAL1
XTAL2
Power_LED
SW_Keyboard
SW_Power
ATMEGA328P-PU
LM2574
16MHZ
+9V
+5V
GND