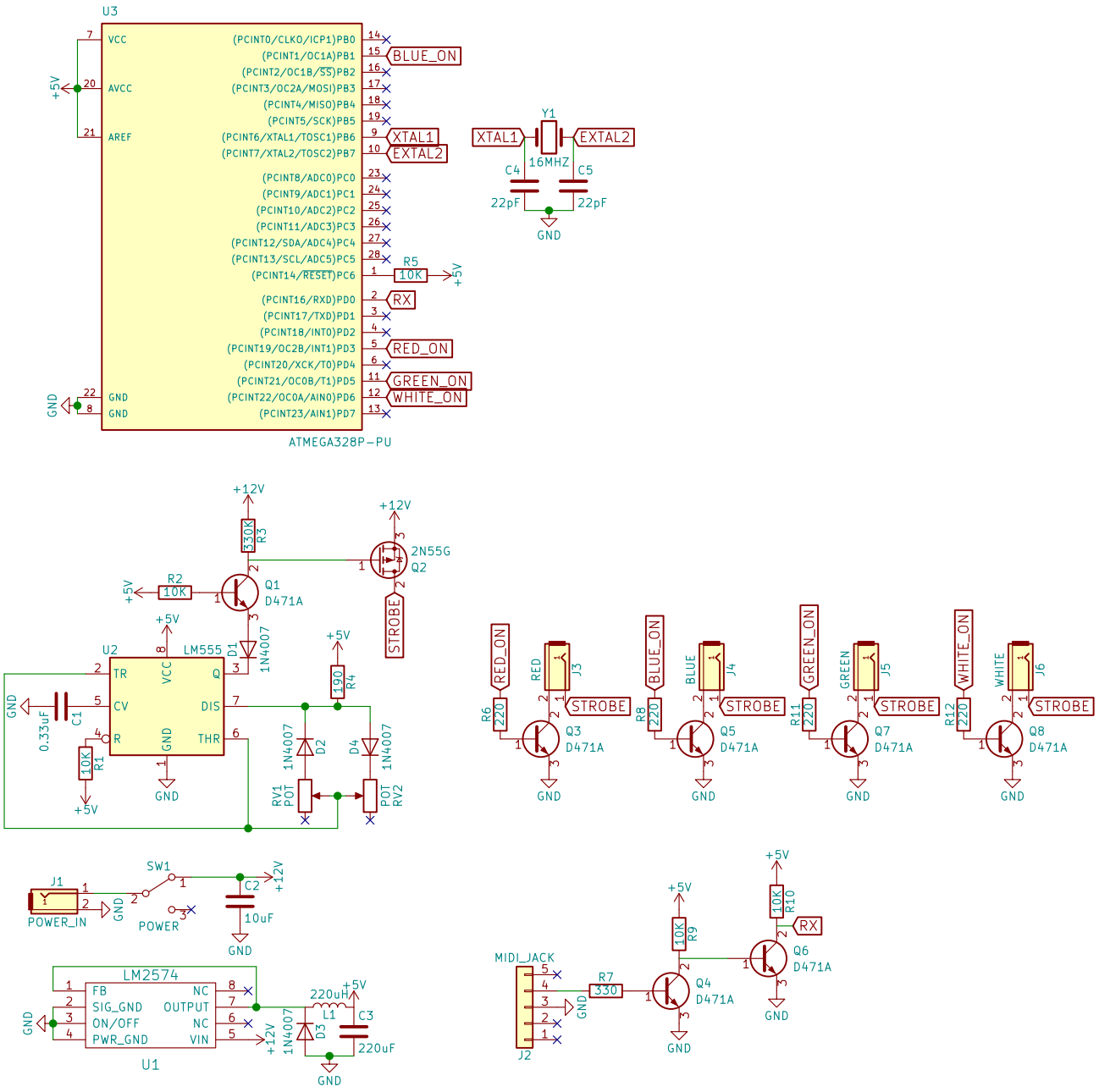
U3
VCC
AVCC
AREF
GND
GND
+5V
(PCINT0/CLKO/ICP1)PB0
(PCINT1/OC1A)PB1
(PCINT2/OC1B/SS)PB2
(PCINT3/OC2A/MOSI)PB3
(PCINT4/MISO)PB4
(PCINT5/SCK)PB5
(PCINT6/XTAL1/TOSC1)PB6
(PCINT7/XTAL2/TOSC2)PB7
(PCINT8/ADC0)PC0
(PCINT9/ADC1)PC1
(PCINT10/ADC2)PC2
(PCINT11/ADC3)PC3
(PCINT12/SDA/ADC4)PC4
(PCINT13/SCL/ADC5)PC5
(PCINT14/RESET)PC6
(PCINT16/RXD)PD0
(PCINT17/TXD)PD1
(PCINT18/INT0)PD2
(PCINT19/OC2B/INT1)PD3
(PCINT20/XCK/T0)PD4
(PCINT21/OC0B/T1)PD5
(PCINT22/OC0A/AIN0)PD6
(PCINT23/AIN1)PD7
BLUE_ON
XTAL1
EXTAL2
RX
RED_ON
GREEN_ON
WHITE_ON
R5
10K
ATMEGA328P-PU
Y1
16MHZ
C4
22pF
C5
22pF
GND
+12V
R3
330K
2N55G
Q2
STROBE
R2
10K
Q1
D471A
D1
1N4007
U2
LM555
TR
CV
R
VCC
DIS
GND
THR
Q
C1
0.33uF
R1
10K
R4
190
D2
1N4007
D4
1N4007
RV1
POT
RV2
POT
RED_ON
R6
220
RED
J3
Q3
D471A
BLUE_ON
R8
220
BLUE
J4
Q5
D471A
GREEN_ON
R11
220
GREEN
J5
Q7
D471A
WHITE_ON
R12
220
WHITE
J6
Q8
D471A
J1
POWER_IN
SW1
POWER
C2
10uF
LM2574
FB
SIG_GND
ON/OFF
PWR_GND
NC
OUTPUT
NC
VIN
U1
220uH
L1
C3
220uF
D3
1N4007
MIDI_JACK
J2
R7
330
Q4
D471A
R9
10K
R10
10K
Q6
D471A