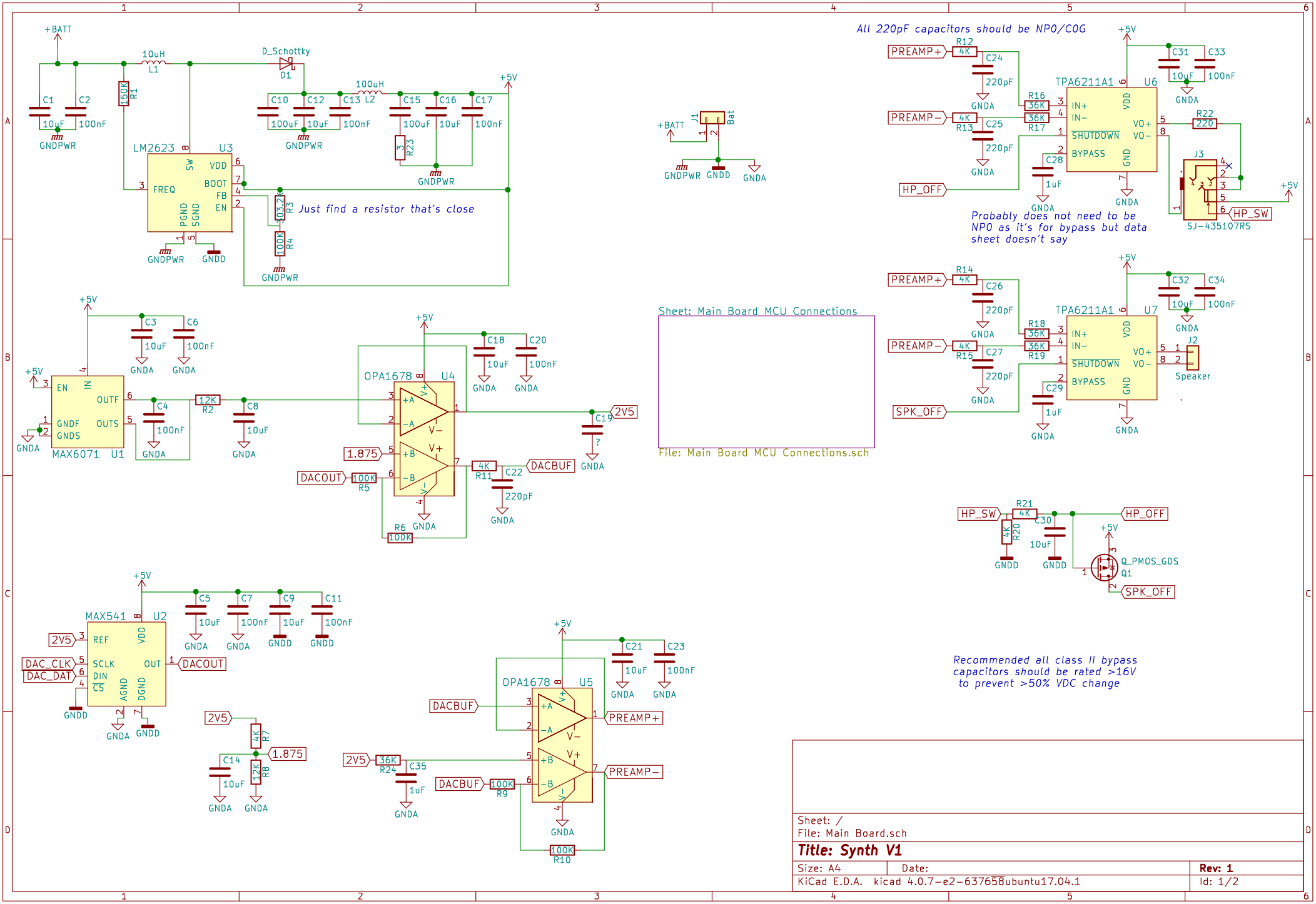
+BATT
10uH
L1
D_Schottky
D1
C1
C2
10uF
100nF
150K
R1
GNDPWR
LM2623
U3
SW
VDD
BOOT
FB
EN
FREQ
PGND
SGND
GNDD
C10
C12
C13
L2
100uH
C15
C16
C17
+5V
R23
3
103.2
R3
100K
R4
Just find a resistor that's close
J1
Bat
GNDA
All 220pF capacitors should be NPO/COG
PREAMP+
PREAMP−
HP_OFF
R12
R13
4K
C24
C25
220pF
R16
R17
36K
TPA6211A1
U6
IN+
IN−
SHUTDOWN
BYPASS
VDD
VO+
VO−
GND
C28
1uF
C31
C33
R22
220
J3
SJ-435107RS
HP_SW
Probably does not need to be NPO as it's for bypass but data sheet doesn't say
R14
R15
C26
C27
R18
R19
U7
C32
C34
J2
Speaker
SPK_OFF
C29
C3
C6
C4
C8
EN
IN
OUTF
OUTS
GNDF
GNDS
MAX6071
U1
12K
R2
OPA1678
U4
+A
−A
+B
−B
V−
V+
C18
C20
C19
2V5
1.875
DACOUT
100K
R5
R6
4K
R11
C22
DACBUF
Sheet: Main Board MCU Connections
File: Main Board MCU Connections.sch
HP_SW
R21
R20
C30
10uF
Q_PMOS_GDS
Q1
MAX541
U2
REF
SCLK
DIN
CS
AGND
DGND
OUT
DAC_CLK
DAC_DAT
C5
C7
C9
C11
R7
R8
C14
OPA1678
U5
C21
C23
PREAMP+
PREAMP−
R24
36K
C35
1uF
R9
R10
Recommended all class II bypass capacitors should be rated >16V to prevent >50% VDC change
Sheet: /
File: Main Board.sch
Title: Synth V1
Size: A4
Date:
Rev: 1
KiCad E.D.A. kicad 4.0.7-e2-637658ubuntu17.04.1
Id: 1/2

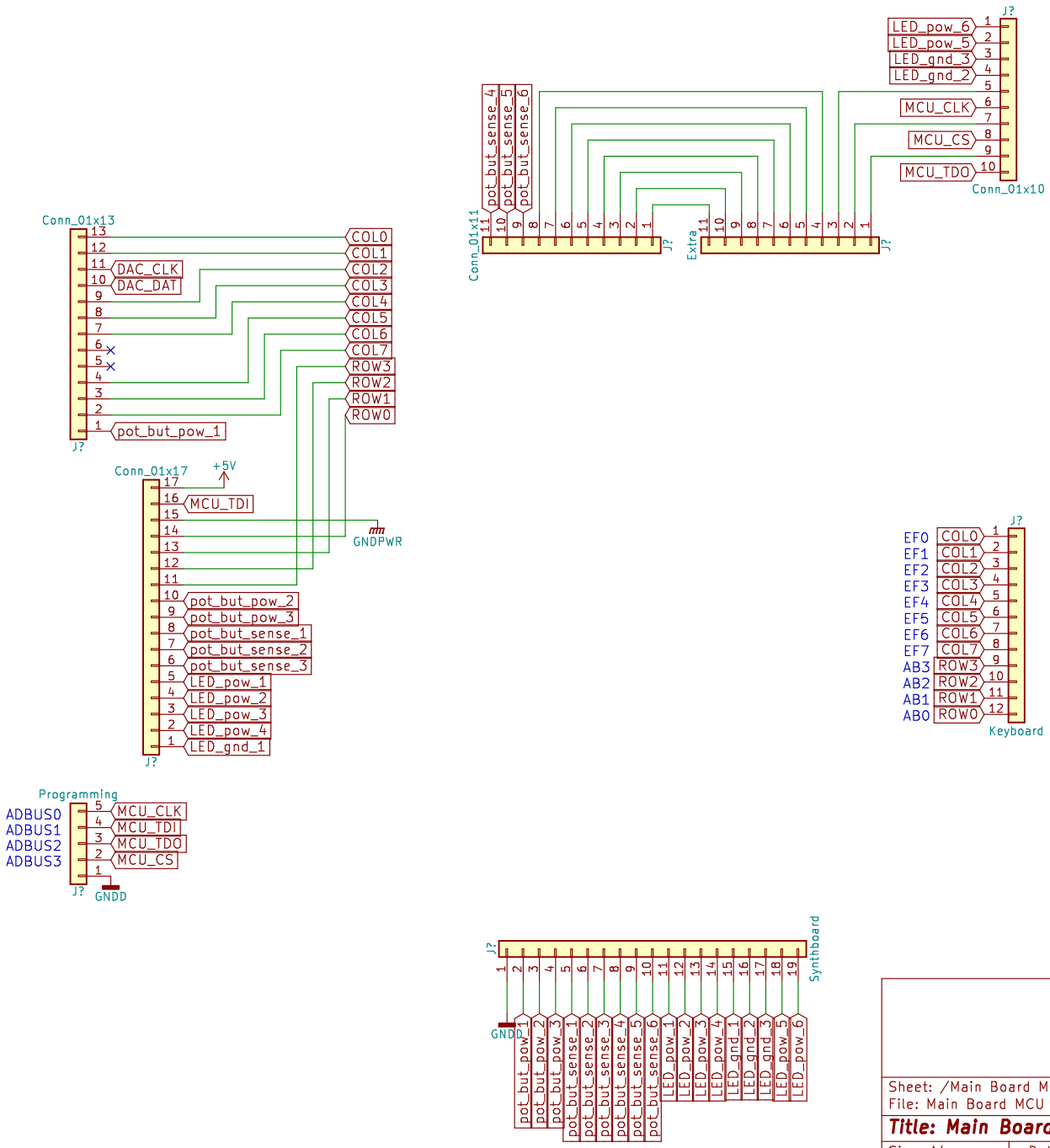

Sheet: /Main Board MCU Connections/
File: Main Board MCU Connections.sch

Title: Main Board Connections

Size: A4	Date: 2018-08-11	Rev: 1
KiCad E.D.A. kicad 4.0.7-e2-637658ubuntu17.04.1		Id: 2/2