Introduction to Electricity and Electronics

Student Guide

Prepared by BLIS GLOBAL Robotics Department

Copyright @2024

Introduction

This document is showing the list of experiments and procedures which will be conducted by students in this course

As Facilitator you should be in advance in the following topics:

Week 1: Overview of Electricity and Circuits

1. **Introduction:**

   Electricity is the flow of electric charge, typically through a conductor like a wire, due to the movement of electrons. It is a fundamental form of energy that powers many of the devices and systems in our daily lives, from lighting and heating to communication and transportation.

   Importance of Electricity:

- **Powering Devices:** Electricity is essential for running household appliances, computers, smartphones, and industrial machines.
- **Communication:** It enables telecommunication systems, the internet, and broadcasting.
- **Healthcare:** Vital for operating medical equipment and maintaining hospital systems.
- **Transportation:** Powers electric vehicles, trains, and traffic control systems.
- **Economic Growth:** Drives industries, promotes technological innovation, and enhances productivity.

  Electricity is integral to modern life, making it a cornerstone of technological and economic development.

2. **Simple Circuit Construction:**

|This is a practical of how a simple electric circuit is made

A. <u>components of a simple circuit</u>

Anny simple circuit should have 4 main components:

1) **Resistor** which represents the electric power consumer
2) The **conductor** or **wire** which has a function of electric power transportation
3) The **Switch** which has a function of controlling power (On/OFF)
4) The **power supply** which has the function of providing the electric power

<u>PRACTICAL No1: Simple circuit construction</u>

- Connect a battery to a bulb using wires to create a simple circuit.
- Add a switch to control the flow of electricity.

3. **Observation:** Observe how the bulb lights up when the switch is closed and goes off when open.

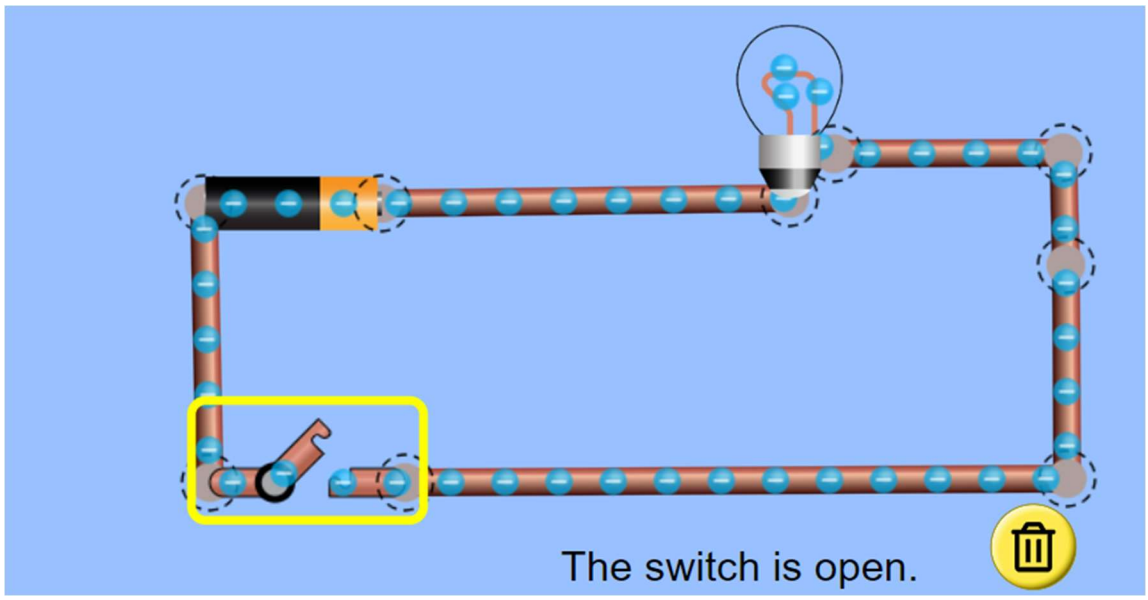

Electric circuit No1(when the switch is open)

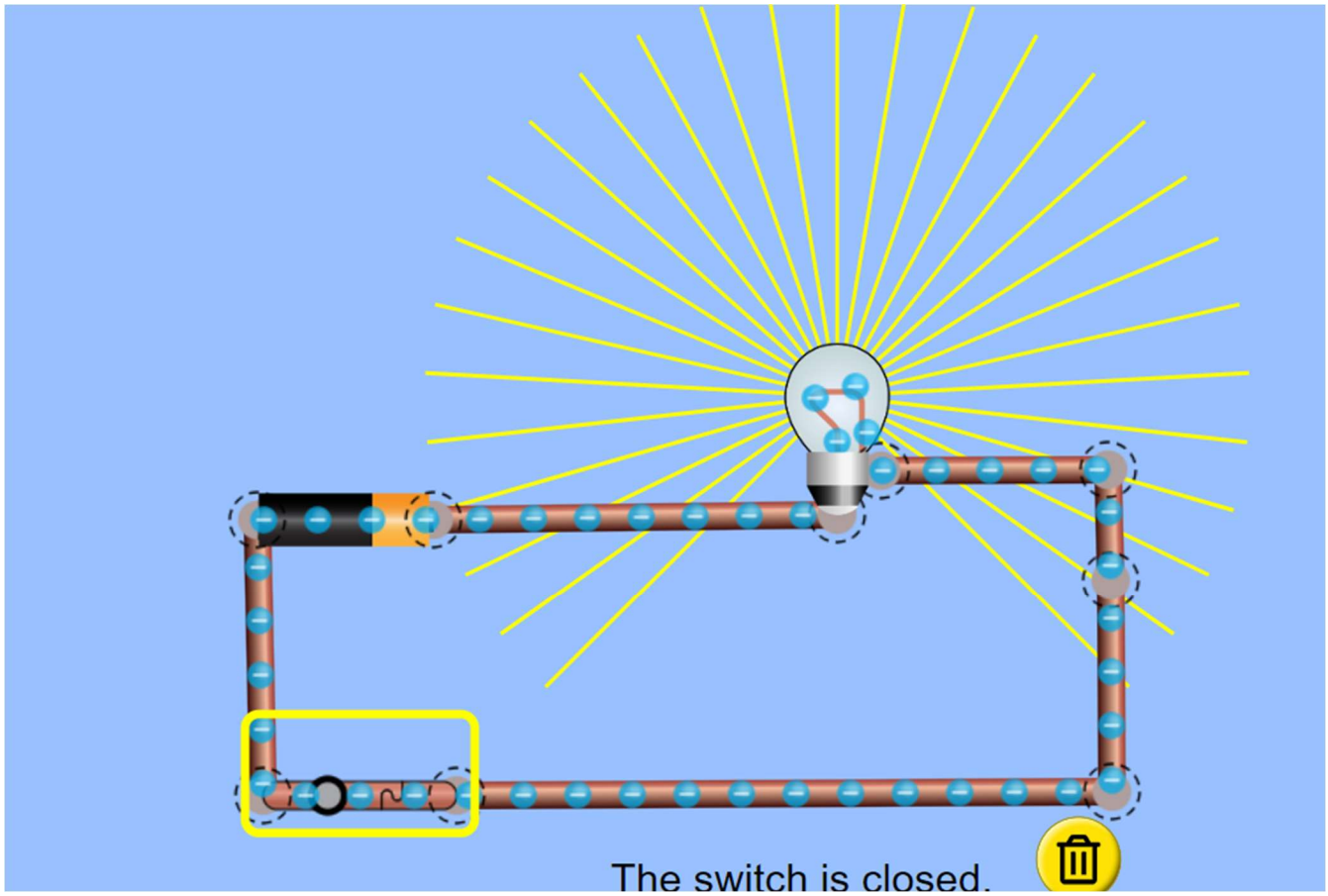

Electric circuit No1(when the switch is Closed)

<u>Your Own Research:</u>

You as a student you will find and get:

1) all laws governing the simple circuit
2) How you can increase the voltage source
3) How you can increase the bright ness of your bulb
4) Types of electricity which exist and examples

External resources Using this simulation explore how to construct a simple circuit

1) https://phet.colorado.edu/sims/html/circuit-construction-kit-dc/latest/circuit-construction-kit-dc_all.html