Introduction to Electricity and Electronics

Student Guide

Prepared by BLIS GLOBAL Robotics Department

Copyright @2024

Week 3: Understanding Voltage, Current, and Resistance

Introduction to Key Concepts

1. Voltage (V):
   - What is it?
     - Voltage is the potential difference between two points in an electrical circuit. Think of it as the force that pushes electric charges through a conductor, like the pressure that pushes water through a hose.
   - Unit of Measurement:
     - Volts (V)
2. Current (I):
   - What is it?
     - Current is the flow of electric charge through a conductor. It's similar to the amount of water flowing through a hose per second.
   - Unit of Measurement:
     - Amperes (A)
3. Resistance (R):
   - What is it?
     - Resistance is the opposition to the flow of current in a circuit. Imagine a constriction in a hose that limits the flow of water. That's what resistance does to electric current.
   - Unit of Measurement:
     - Ohms (Ω)

Understanding the Relationship: Ohm’s Law

- Ohm’s Law Formula:
  - V=I×RV = I \times RV=I×R
- How It Works:
  - Voltage (V) is the product of Current (I) and Resistance (R). This law shows how these three are related. For example:
    - If you increase the voltage while keeping resistance the same, the current increases.
    - If you increase the resistance while keeping voltage the same, the current decreases.

Practical Demonstration: Seeing Ohm’s Law in Action

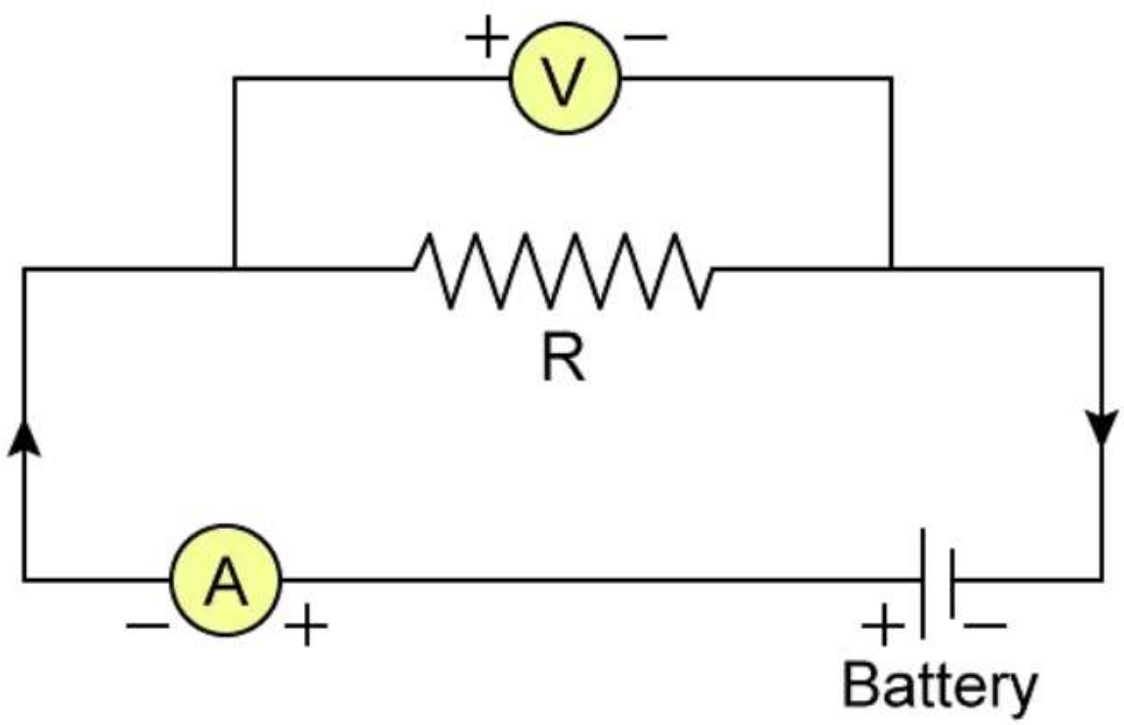

- What You'll Need:

- A battery, a resistor, an ammeter, a variable power supply, and a multimeter.

- Steps:

1. Set Up the Circuit:
    - Connect the battery, resistor, and ammeter in a simple series circuit.
2. Measure Voltage and Current:
    - Use the multimeter to measure the voltage across the resistor and the current through the circuit.
3. Apply Ohm's Law:
    - Calculate the resistance using the formula R=VIR = \frac{V}{I}R=IV.
4. Experiment with Voltage:
    - Increase the voltage and observe how the current changes.
5. Discussion:
    - Notice how increasing the voltage causes more current to flow, and how resistance affects this relationship.

Real-Life Applications of Voltage, Current, and Resistance

- In Your Home:
    - Devices like your phone charger and TV rely on the right voltage and current to operate safely.
- In Electronics:
    - Smartphones, laptops, and other gadgets carefully manage voltage and current to avoid damage.
- Safety First:
    - Proper insulation and resistance in wiring protect us from electrical shocks.

Recap & Quick Review

- What You Learned:
  - Voltage is like the pressure pushing electricity through a wire.
  - Current is the flow of electricity.
  - Resistance slows down the flow, like a narrow pipe restricts water flow.
- Quick Questions:
  - What happens to the current if you increase the resistance but keep the voltage the same?
  - How do voltage and current work together in your everyday electronics?

This lesson gives you a clear understanding of the basic building blocks of electricity: voltage, current, and resistance, and how they interact in an electrical circuit.