Introduction to Electricity and Electronics

Student Guide

Prepared by BLIS GLOBAL Robotics Department

Copyright @2024

Week 4: Introduction to Electronic Components

Objective:

By the end of this lesson, students will be able to identify and understand the basic functions of common electronic components, such as resistors, capacitors, diodes, transistors, and integrated circuits (ICs).

Lesson Outline:

1. **What are Electronic Components? (5 minutes)**

- Definition: Electronic components are the building blocks of electronic circuits. They control the flow of electricity and enable the creation of devices like computers, radios, and smartphones.
- Importance: Understanding electronic components is crucial for anyone interested in electronics, as they are fundamental to designing, troubleshooting, and building electronic circuits.

---

2. **Common Electronic Components (20 minutes)**

a. **Resistors (5 minutes)**

- Function: Resistors limit the flow of electric current in a circuit. They help control the amount of current reaching other components.
- Symbol and Unit:
  - Symbol: A zigzag line or a rectangle.
  - Unit: Ohms (Ω).
- Practical Use: Resistors are used in almost every electronic circuit to prevent components from receiving too much current, which could damage them.

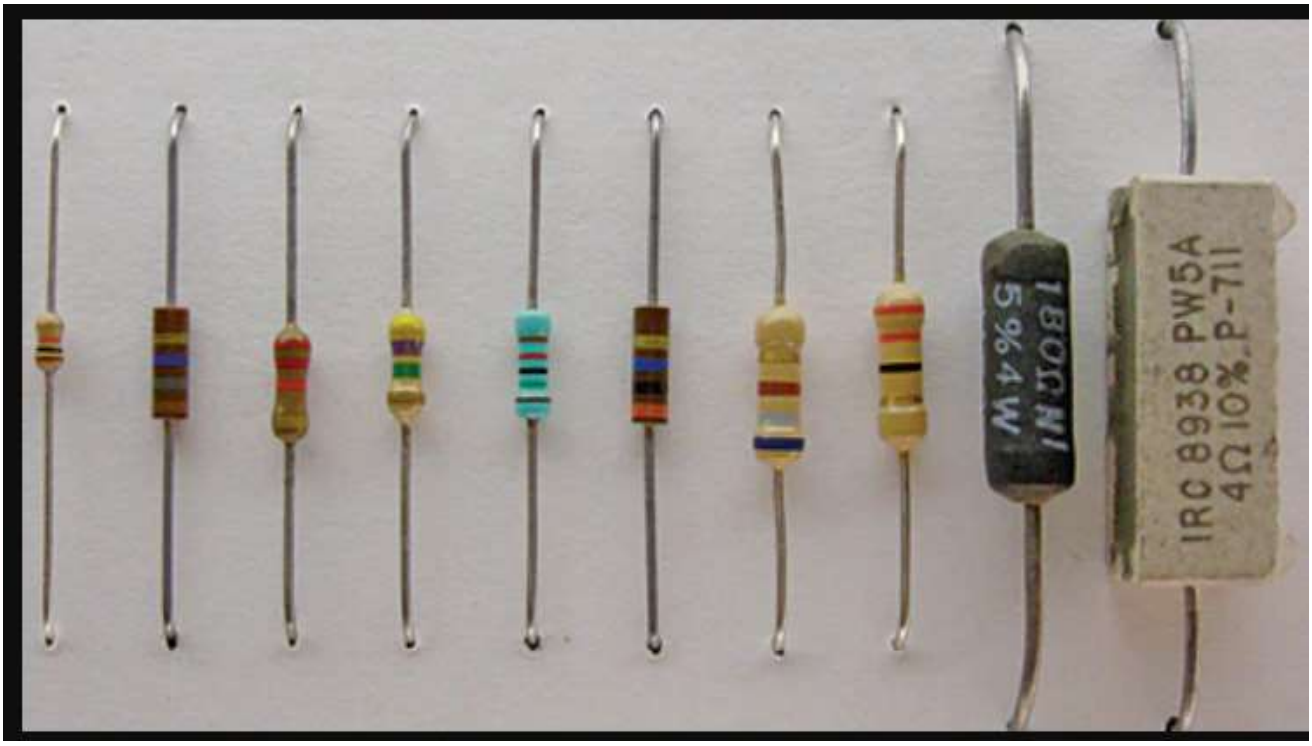

Image 1: Resistors

Ref1: https://www.te.com/en/products/passive-components/resistors/intersection/resistor-color-codes.html (how to calculate Resistor based on colors)

b. **Capacitors (5 minutes)**

- Function: Capacitors store and release electrical energy. They can smooth out voltage fluctuations and are used in filtering applications.
- Symbol and Unit:
  - Symbol: Two parallel lines.
  - Unit: Farads (F).
- Practical Use: Capacitors are commonly found in power supplies to stabilize voltage levels and in timing circuits.

Image 2: All types of capacitors

c. **Diodes (3 minutes)**

- Function: Diodes allow current to flow in only one direction, acting as a one-way valve for electricity.
- Symbol: A triangle pointing to a line.
- Practical Use: Diodes are used in rectifiers, which convert AC (alternating current) to DC (direct current), and in protecting circuits from voltage spikes.

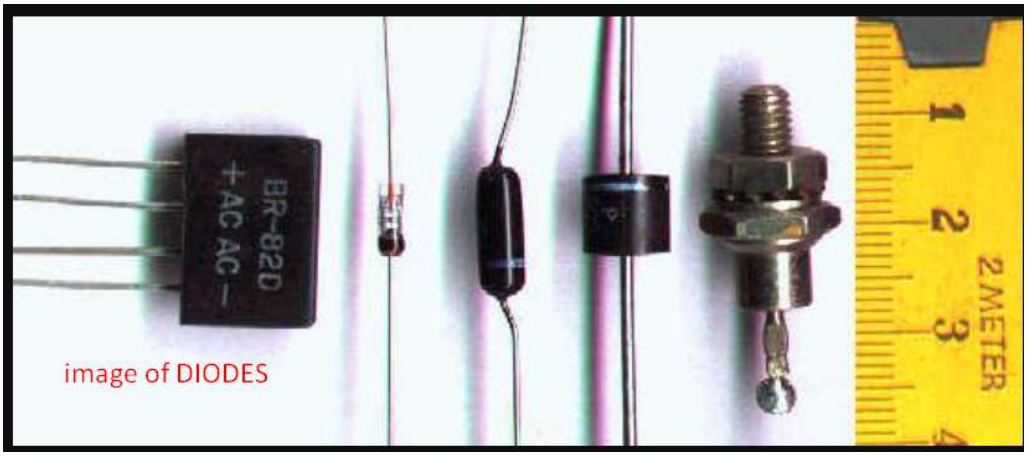

Image 3: Most common types of Diodes

d. **Transistors (4 minutes)**

- Function: Transistors act as switches or amplifiers in circuits. They can turn a small input signal into a larger output signal.
- Symbol: A combination of lines with a circle, representing the three terminals: base, collector, and emitter.
- Practical Use: Transistors are essential in digital electronics, forming the foundation of logic gates and microprocessors.

Image 4: Most common types of Transistors

e**(ICs) (3 minutes)**

- Function: ICs are complex circuits embedded in a small chip, containing multiple electronic components such as transistors, resistors, and diodes.
- Symbol: A rectangle with pins on either side.
- Practical Use: ICs are used in almost all modern electronic devices, from simple timers to complex microprocessors.

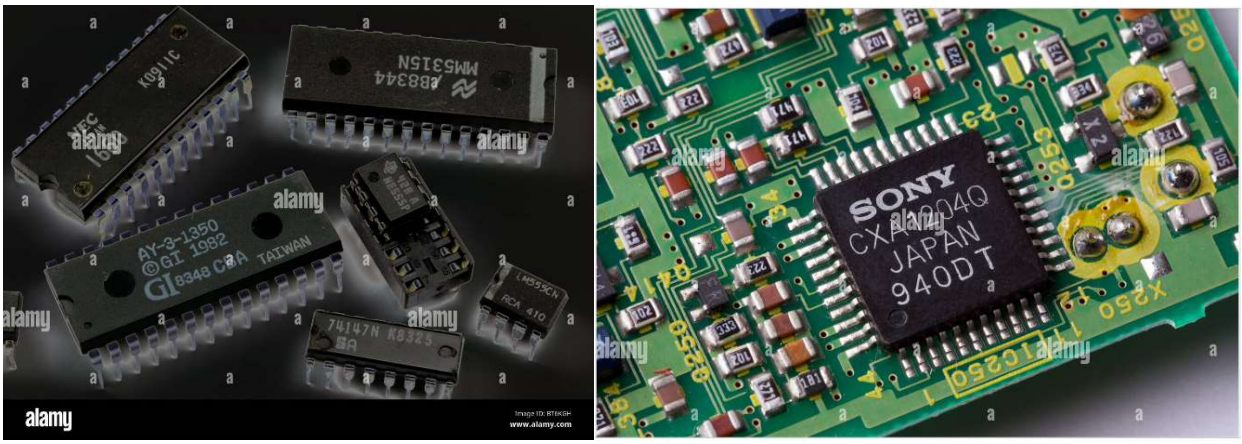

Image 5: Most common types of IC

---

3. **Conclusion and Q&A (5 minutes)**

- Recap: Review the functions and importance of each component discussed.
- Q&A: Open the floor for any questions students might have.

---

4. Laboratory Practical on each component behaviors

Experiment 1: Resistor behaviors

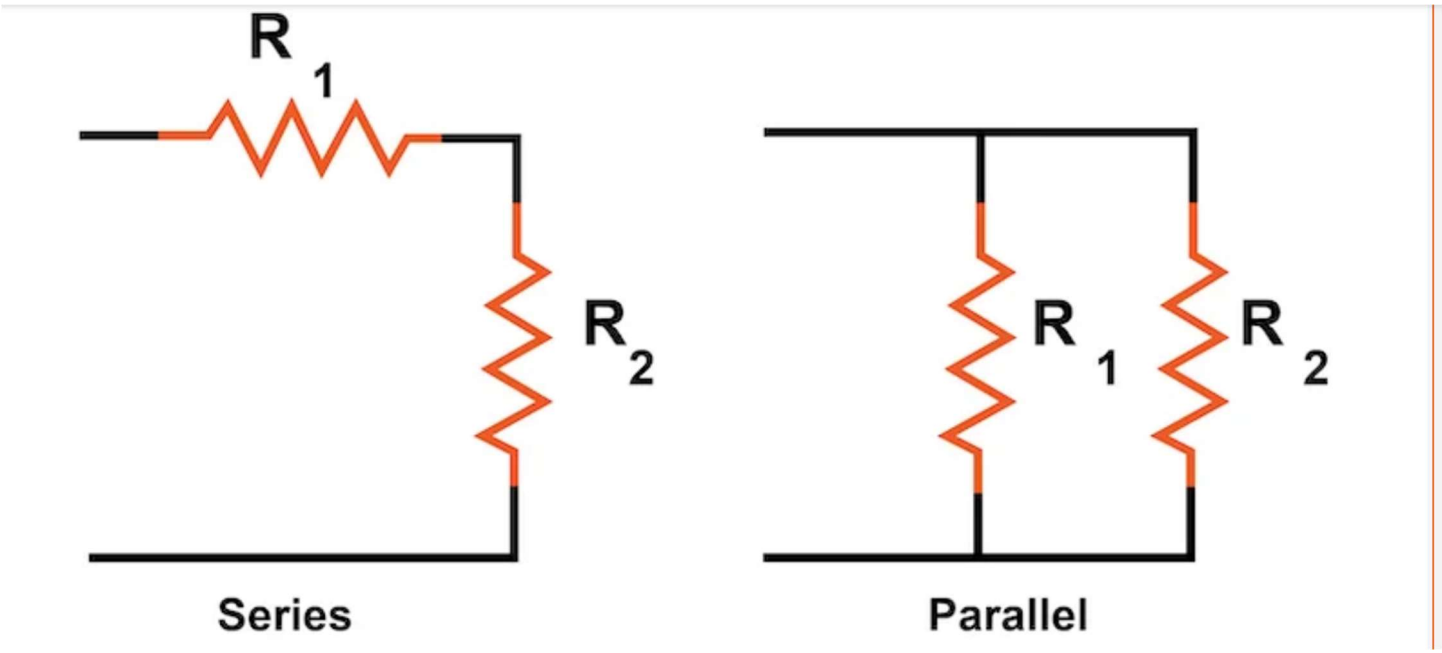

Use a 1KΩ Resistor in place of R1, R2, R3 and R4 and construct those circuits

a) Using the multimeter measure the total resistor in Series and Parallel circuit and make comparison.
b) Apply 7.4 v a cross each circuit and measure the voltage across R2 on each circuit

Let us Discuss the behaviors of Resistor.

Experiment 2: Capacitor behaviors

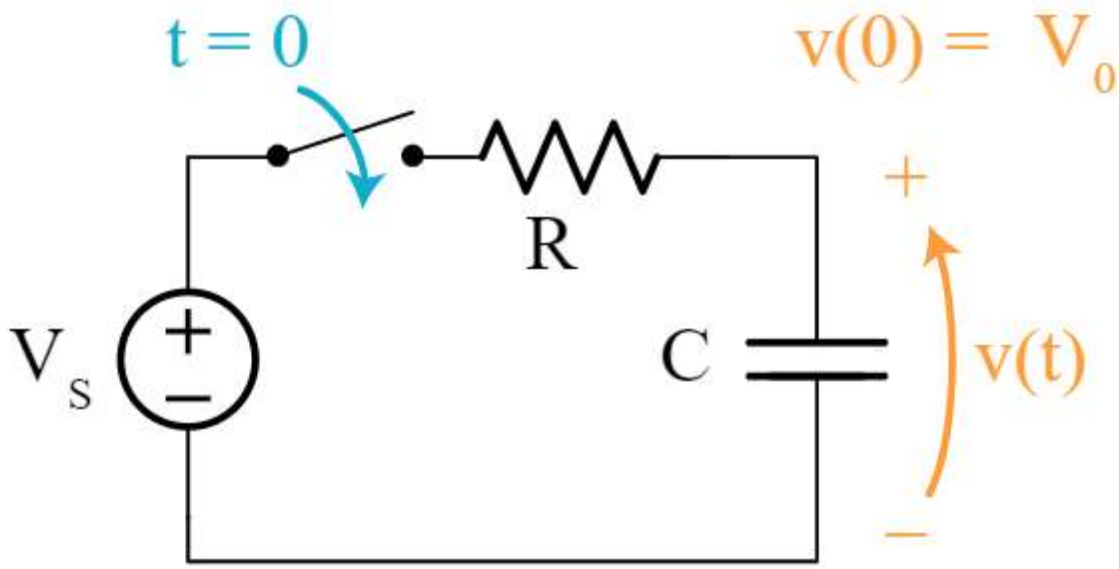

Make the above circuit on your breadboard and use the voltage of 7.4v as Vs and 10kΩ as R and 100µF capacitor:

a) Using 2 multimeters measure the voltage before switching on the circuit acro Vs and C (on your multimeter you should have 7.4 v and 0 v)
b) Switch on the circuit and record the time of switching (check the voltage change across C and the duration of change up to the maximum change)
c) Switch off the circuit measure the voltage across C
d) Remove the power supply and connect the switch with the capacitor
e) Switch on the circuit again and measure the variation of voltage across C

Let us Discuss the behaviors of Capacitor

Experiment 3: Diode behaviors

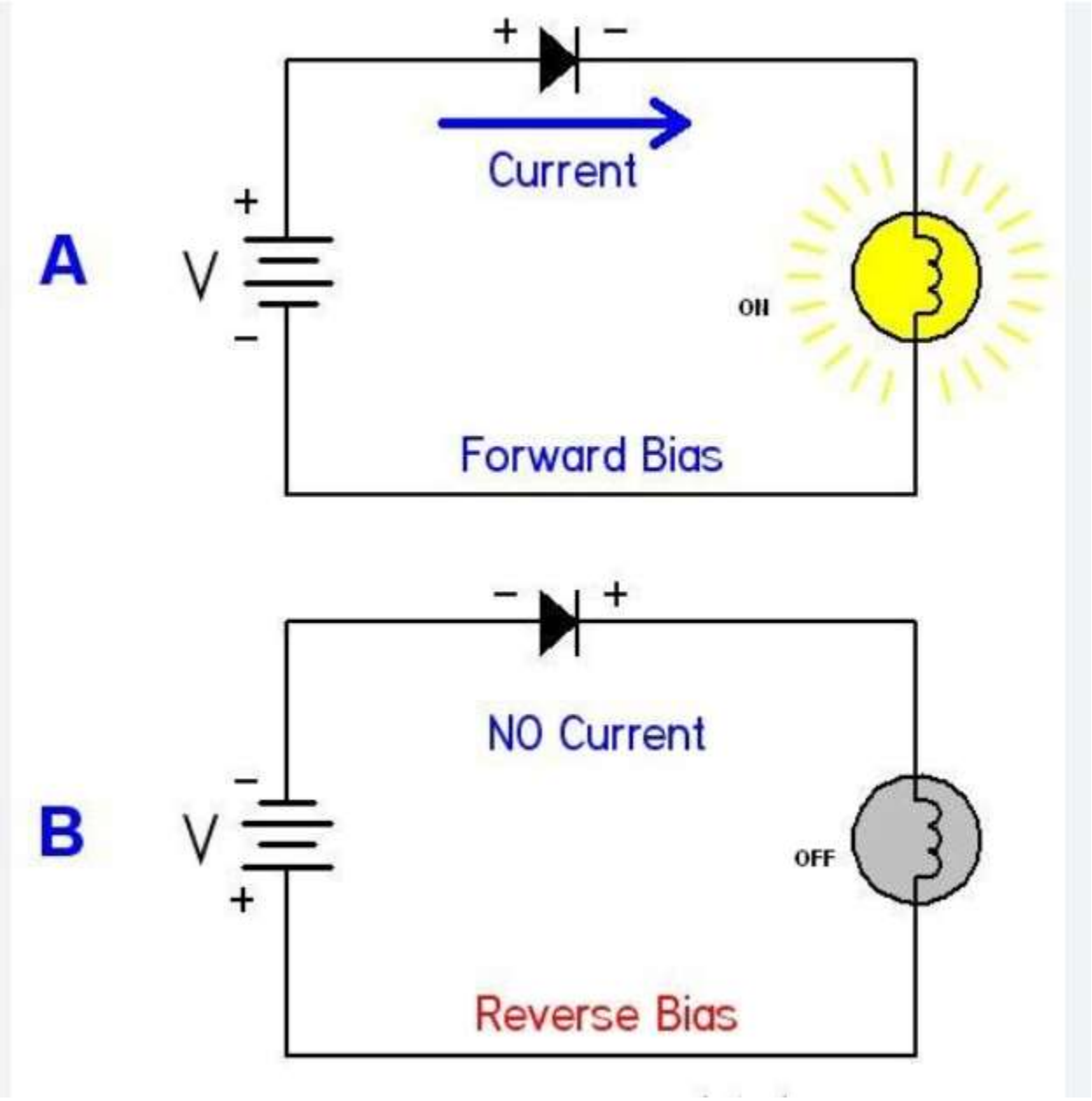

Using 12 v Battery ,1Diode and 1 Lamp and wires make the circuit A and check if the lamp is ON or OFF. if so, reverse your Diode and check if the state will change (If it was ON it will be off and if it was OFF, it will be ON).

Experiment 4: Transistor behaviors

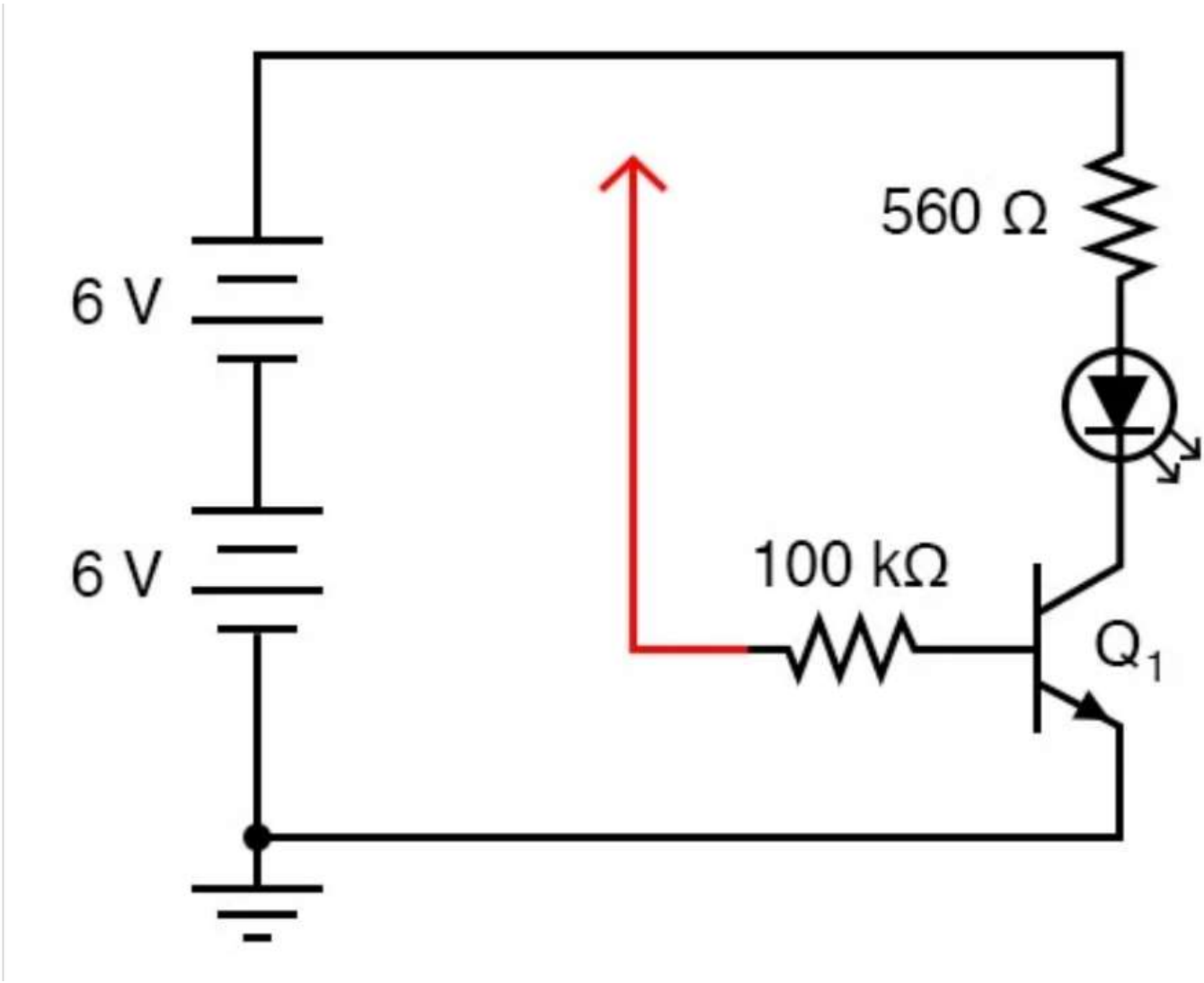

|Make this circuit using any NPN transistor

a) After completing this circuit connect the red wire on ground and record the brightness of the LED (ON/OFF/ dimmer)
b) Connect again the red wire on VCC and record the result

Let us Discuss the behaviors of Transistor

Further Reading:

- Encourage students to explore hands-on projects that involve these components, such as building a simple LED circuit or a transistor amplifier.

This lesson gives a foundational understanding of electronic components, setting the stage for more complex topics in electronics.