EXPERIMENT No1: Simple Circuit

Student Guide

Prepared by BLIS GLOBAL Robotics Department

Copyright @2024

Introduction:

What is a Simple Circuit?

A simple circuit is the most basic form of an electrical circuit. It consists of a power source, conductors, and a load (like a light bulb). In a simple circuit, electrical current flows from the power source, through the conductors, and into the load, allowing the load to perform its function (e.g., lighting a bulb).

Objective:

Understand and build a simple electrical circuit using basic components.

Basic Components of a Simple Circuit:

1. Power Source (Battery):
    - A device that provides the energy needed for the circuit to work.
    - Example: AA or 9V battery,12v Power adapter.
2. Conductors (Wires):
    - Materials (usually made of copper) that allow electric current to flow through them.
    - Wires connect the components in the circuit and form a path for the electricity.
3. Load (Light Bulb, Resistor, etc.):
    - A device that converts electrical energy into another form, such as light, heat, or mechanical work.
    - Example: A small light bulb that lights up when the circuit is complete.
4. Switch (Optional):
    - A device that can open or close the circuit, allowing you to control the flow of electricity.
    - When the switch is open, the circuit is incomplete, and the current cannot flow. When the switch is closed, the circuit is complete, and current flows through the components.

SIMPLE ELECTRICAL CIRCUITS

One simple circuit

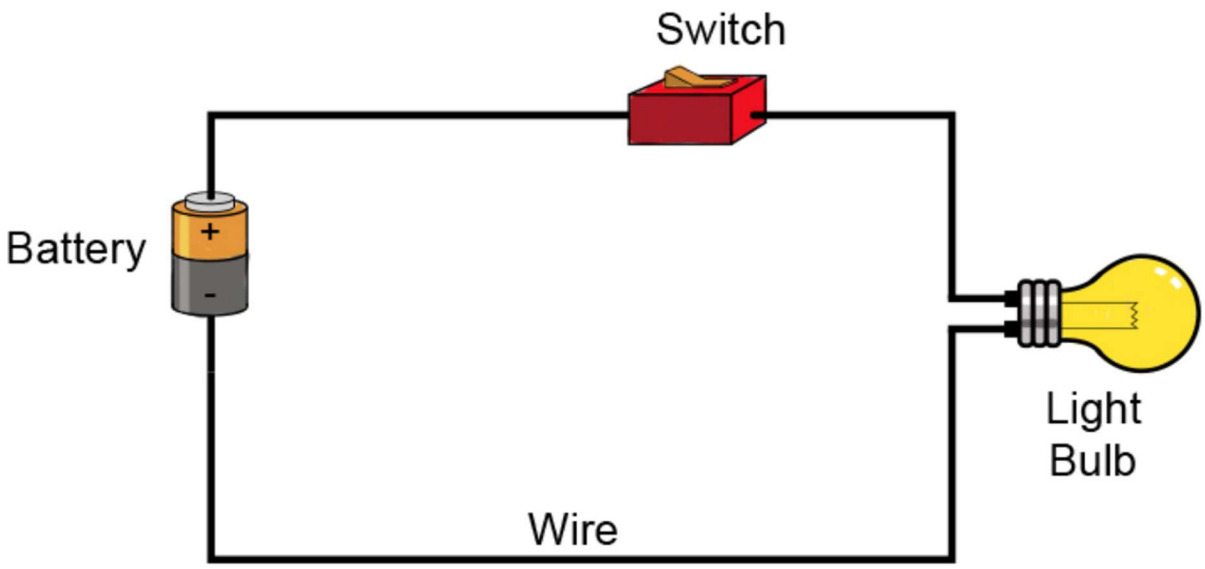

Summary:

A simple circuit demonstrates how electrical energy flows through a closed loop, powering a device such as a light bulb. Understanding the flow of electricity through components like conductors, batteries, and loads is the foundation of all electrical and electronic systems.