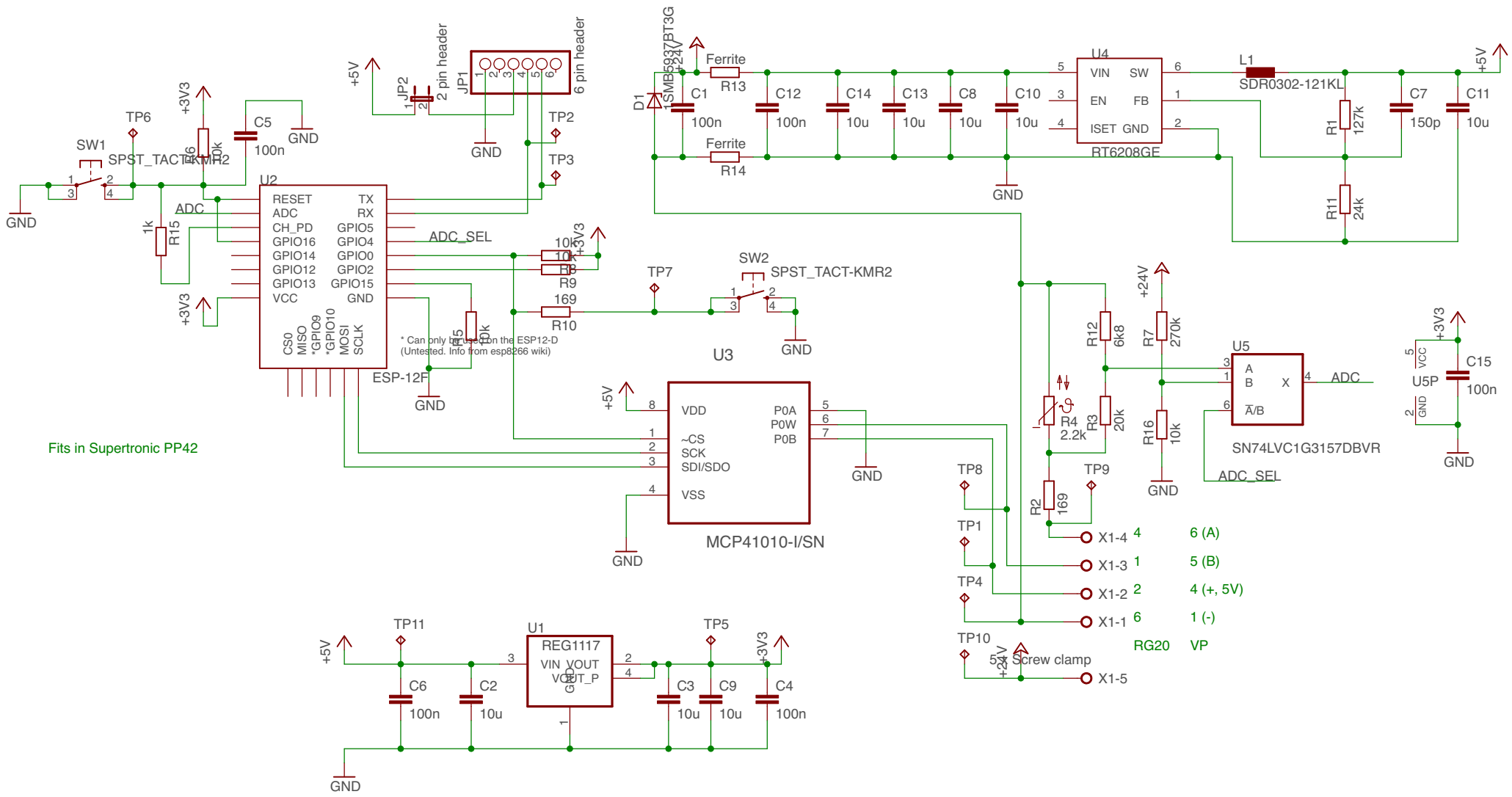

2017-11-29 22:35 /Users/olal/Documents/eagle/VPThermo/VPThermo.sch (Sheet: 1/1)