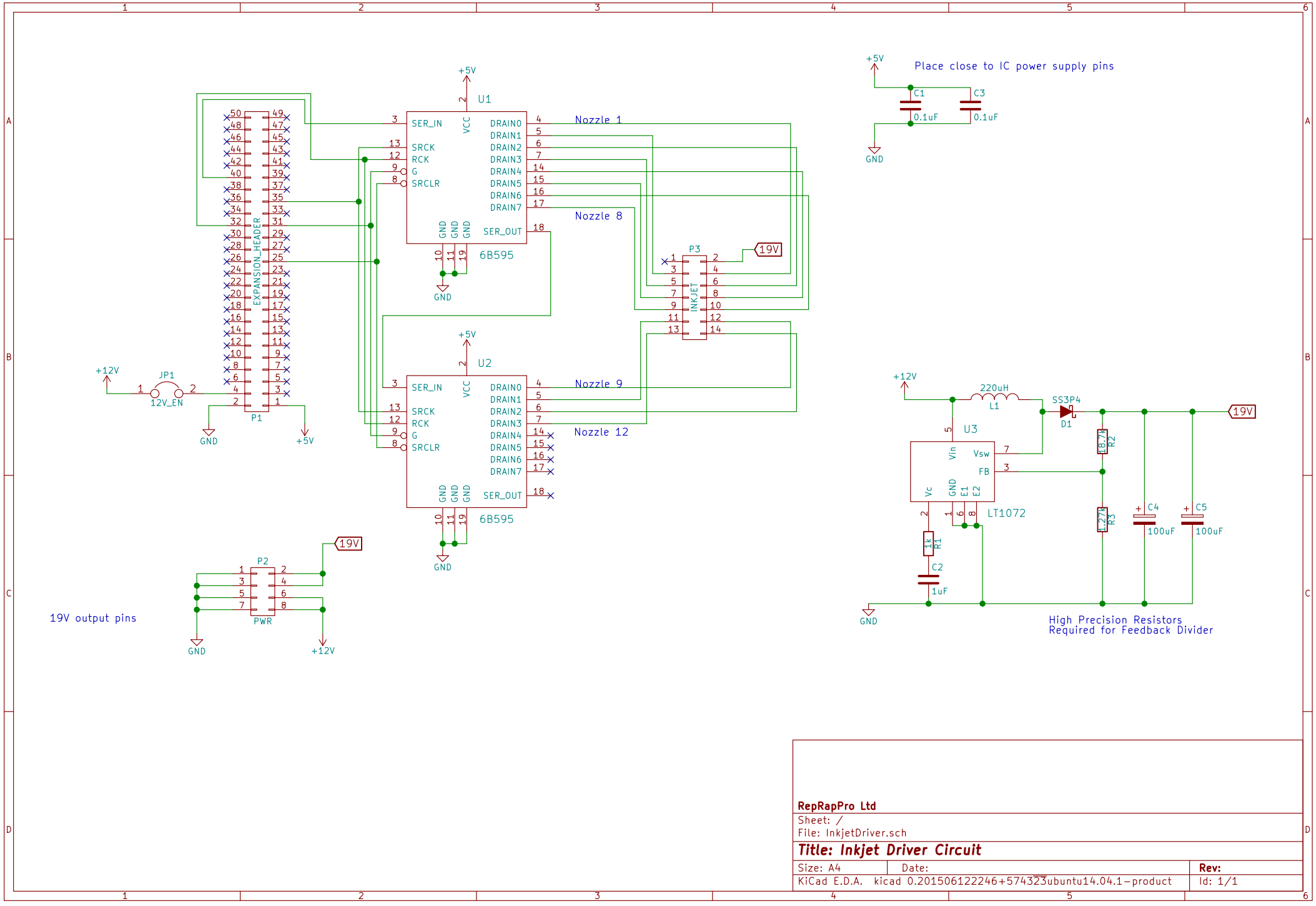

RepRapPro Ltd

Sheet: /

File: InkjetDriver.sch

Title: Inkjet Driver Circuit

Size: A4	Date:	Rev:
KiCad E.D.A. kicad 0.201506122246+574323ubuntu14.04.1-product		Id: 1/1