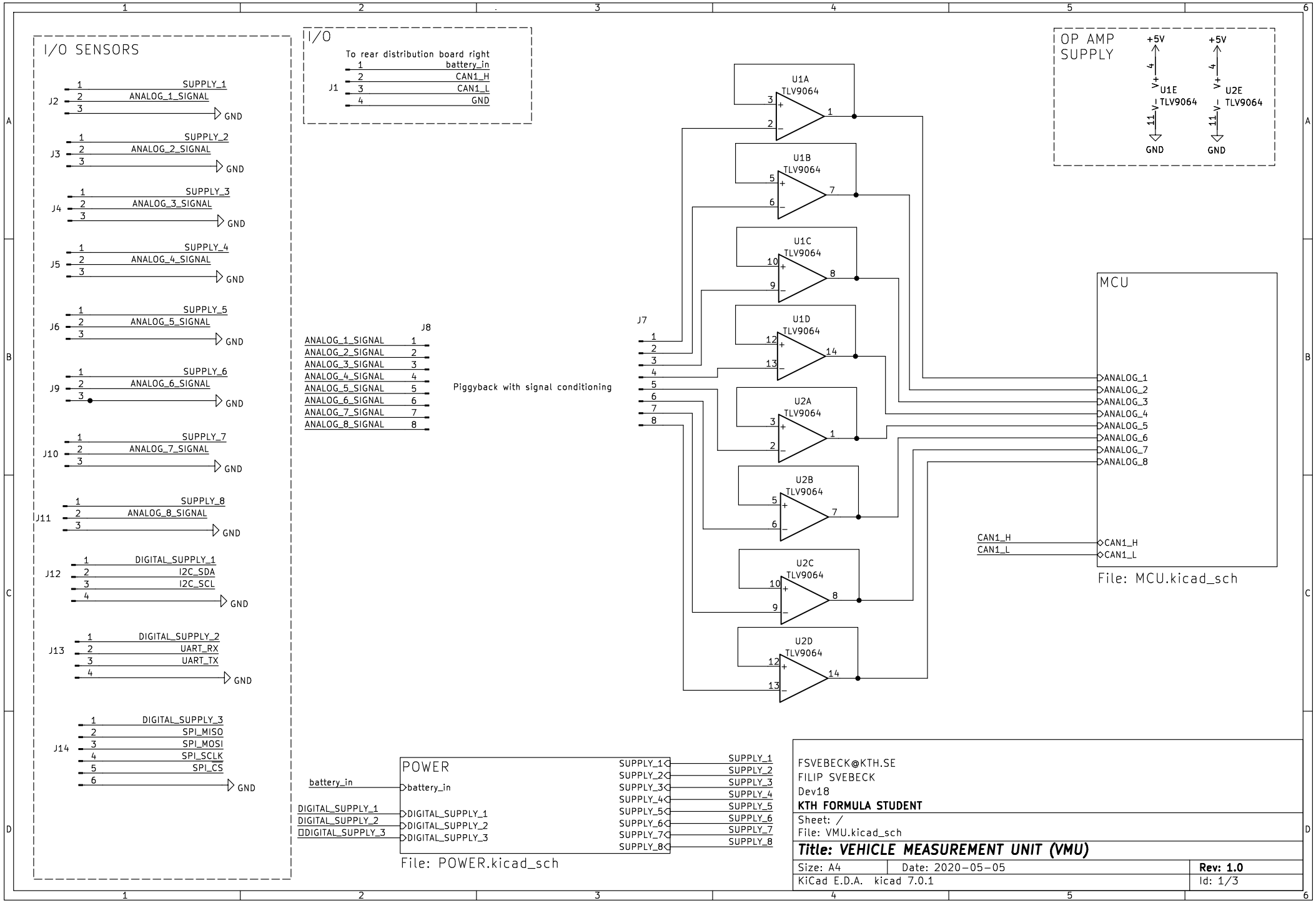
I/O SENSORS
J2 SUPPLY_1 ANALOG_1_SIGNAL GND
J3 SUPPLY_2 ANALOG_2_SIGNAL GND
J4 SUPPLY_3 ANALOG_3_SIGNAL GND
J5 SUPPLY_4 ANALOG_4_SIGNAL GND
J6 SUPPLY_5 ANALOG_5_SIGNAL GND
J9 SUPPLY_6 ANALOG_6_SIGNAL GND
J10 SUPPLY_7 ANALOG_7_SIGNAL GND
J11 SUPPLY_8 ANALOG_8_SIGNAL GND
J12 DIGITAL_SUPPLY_1 I2C_SDA I2C_SCL GND
J13 DIGITAL_SUPPLY_2 UART_RX UART_TX GND
J14 DIGITAL_SUPPLY_3 SPI_MISO SPI_MOSI SPI_SCLK SPI_CS GND
I/O
To rear distribution board right
J1 battery_in CAN1_H CAN1_L GND
OP AMP SUPPLY
+5V U1E TLV9064 GND
+5V U2E TLV9064 GND
U1A TLV9064
U1B TLV9064
U1C TLV9064
U1D TLV9064
U2A TLV9064
U2B TLV9064
U2C TLV9064
U2D TLV9064
J7
J8
ANALOG_1_SIGNAL
ANALOG_2_SIGNAL
ANALOG_3_SIGNAL
ANALOG_4_SIGNAL
ANALOG_5_SIGNAL
ANALOG_6_SIGNAL
ANALOG_7_SIGNAL
ANALOG_8_SIGNAL
Piggyback with signal conditioning
MCU
ANALOG_1
ANALOG_2
ANALOG_3
ANALOG_4
ANALOG_5
ANALOG_6
ANALOG_7
ANALOG_8
CAN1_H
CAN1_L
File: MCU.kicad_sch
POWER
battery_in
DIGITAL_SUPPLY_1
DIGITAL_SUPPLY_2
DIGITAL_SUPPLY_3
SUPPLY_1
SUPPLY_2
SUPPLY_3
SUPPLY_4
SUPPLY_5
SUPPLY_6
SUPPLY_7
SUPPLY_8
File: POWER.kicad_sch
FSVEBECK@KTH.SE
FILIP SVEBECK
Dev18
KTH FORMULA STUDENT
Sheet: /
File: VMU.kicad_sch
Title: VEHICLE MEASUREMENT UNIT (VMU)
Size: A4
Date: 2020-05-05
Rev: 1.0
KiCad E.D.A. kicad 7.0.1
Id: 1/3

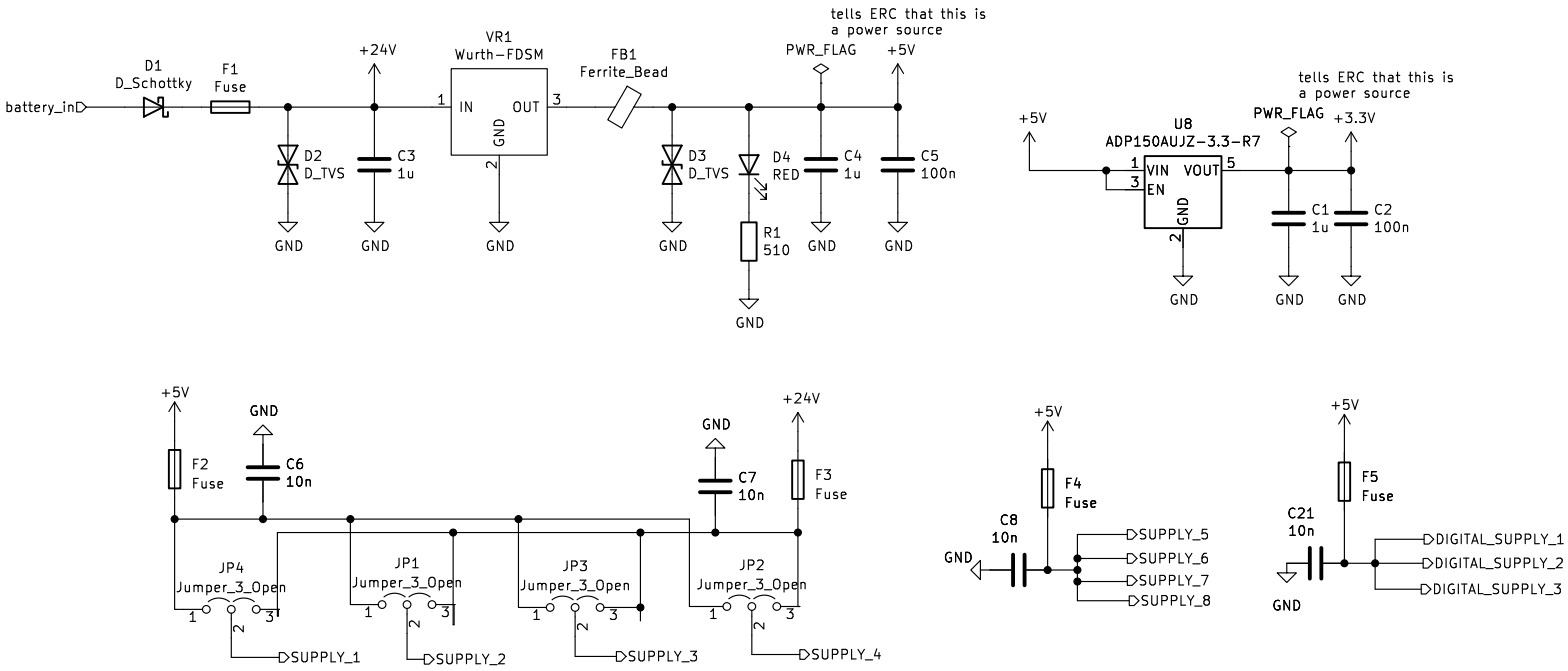

FSVEBECK@KTH.SE
FILIP SVEBECK
DeV18
KTH FORMULA STUDENT

Sheet: /POWER/
File: POWER.kicad_sch

Title: VEHICLE MEASUREMENT UNIT (VMU)

Size: A4	Date:	**Rev: 1.0**
KiCad E.D.A. kicad 7.0.1		Id: 2/3

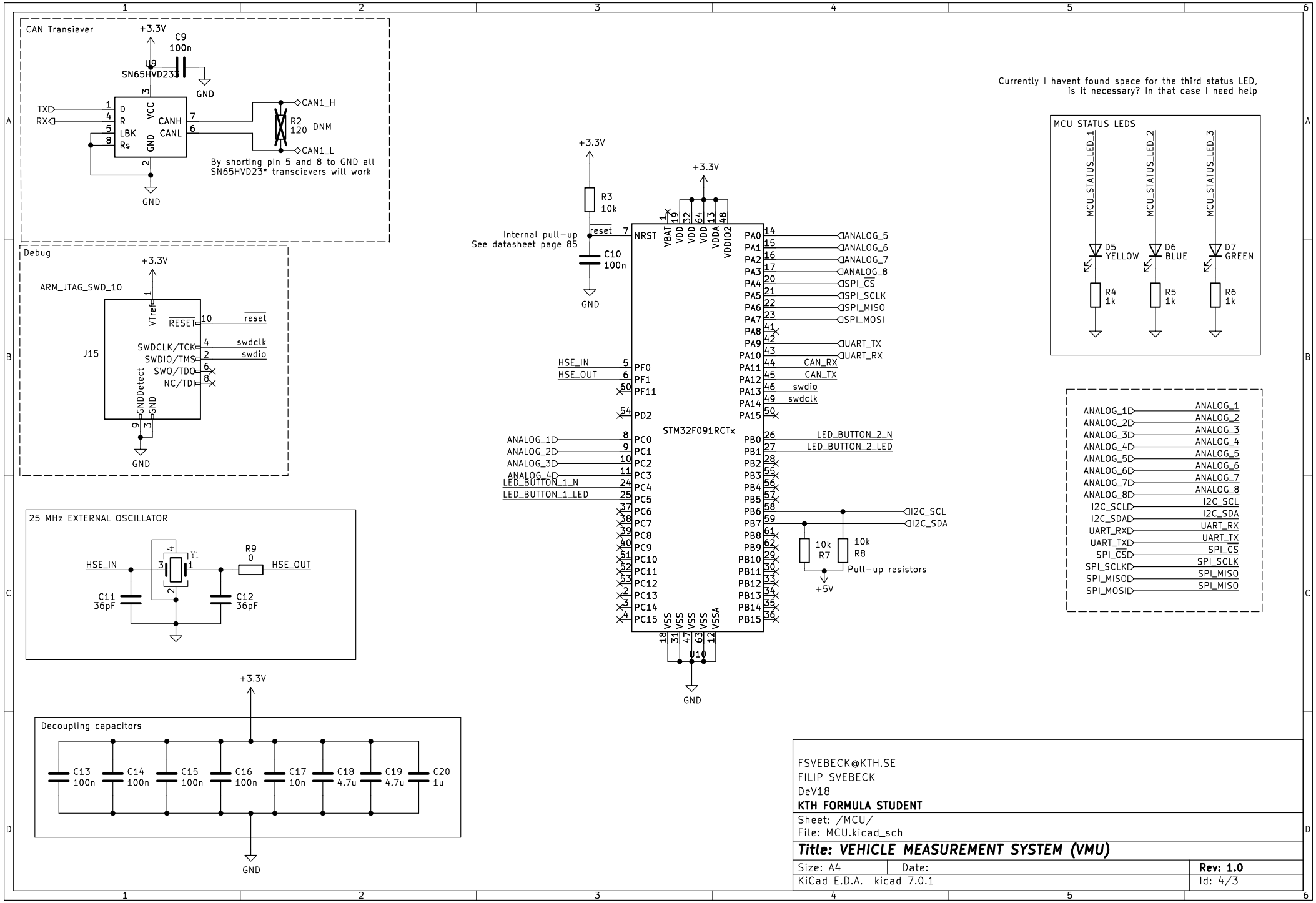
CAN Transiever
+3.3V
C9
100n
U9
SN65HVD233
GND
TX
RX
D
R
LBK
Rs
VCC
CANH
CANL
GND
CAN1_H
R2
120
DNM
CAN1_L
By shorting pin 5 and 8 to GND all
SN65HVD23* transcievers will work
Debug
ARM_JTAG_SWD_10
J15
VTref
RESET
reset
SWDCLK/TCK
swdclk
SWDIO/TMS
swdio
SWO/TDO
NC/TDI
GNDDetect
Internal pull-up
See datasheet page 85
R3
10k
C10
100n
NRST
VBAT
VDD
VDDA
VDDIO2
STM32F091RCTx
HSE_IN
HSE_OUT
ANALOG_1
ANALOG_2
ANALOG_3
ANALOG_4
LED_BUTTON_1_N
LED_BUTTON_1_LED
ANALOG_5
ANALOG_6
ANALOG_7
ANALOG_8
SPI_CS
SPI_SCLK
SPI_MISO
SPI_MOSI
UART_TX
UART_RX
CAN_RX
CAN_TX
LED_BUTTON_2_N
LED_BUTTON_2_LED
I2C_SCL
I2C_SDA
10k
R7
R8
Pull-up resistors
+5V
U10
Currently I havent found space for the third status LED,
is it necessary? In that case I need help
MCU STATUS LEDS
MCU_STATUS_LED_1
MCU_STATUS_LED_2
MCU_STATUS_LED_3
D5
YELLOW
D6
BLUE
D7
GREEN
R4
1k
R5
1k
R6
1k
25 MHz EXTERNAL OSCILLATOR
Y1
R9
0
C11
36pF
C12
36pF
Decoupling capacitors
C13
100n
C14
100n
C15
100n
C16
100n
C17
10n
C18
4.7u
C19
4.7u
C20
1u
FSVEBECK@KTH.SE
FILIP SVEBECK
DeV18
KTH FORMULA STUDENT
Sheet: /MCU/
File: MCU.kicad_sch
Title: VEHICLE MEASUREMENT SYSTEM (VMU)
Size: A4
Date:
Rev: 1.0
KiCad E.D.A. kicad 7.0.1
Id: 4/3