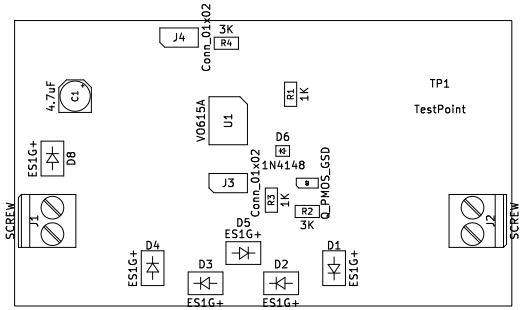

Dcc Diy Tools

Sheet:
File: AbcStop.kicad_pcb

Title: AbcStop

Size: A4	Date: 2023-06-01	**Rev: 0.0.2**
${KICAD_VERSION}		Id: 1/1