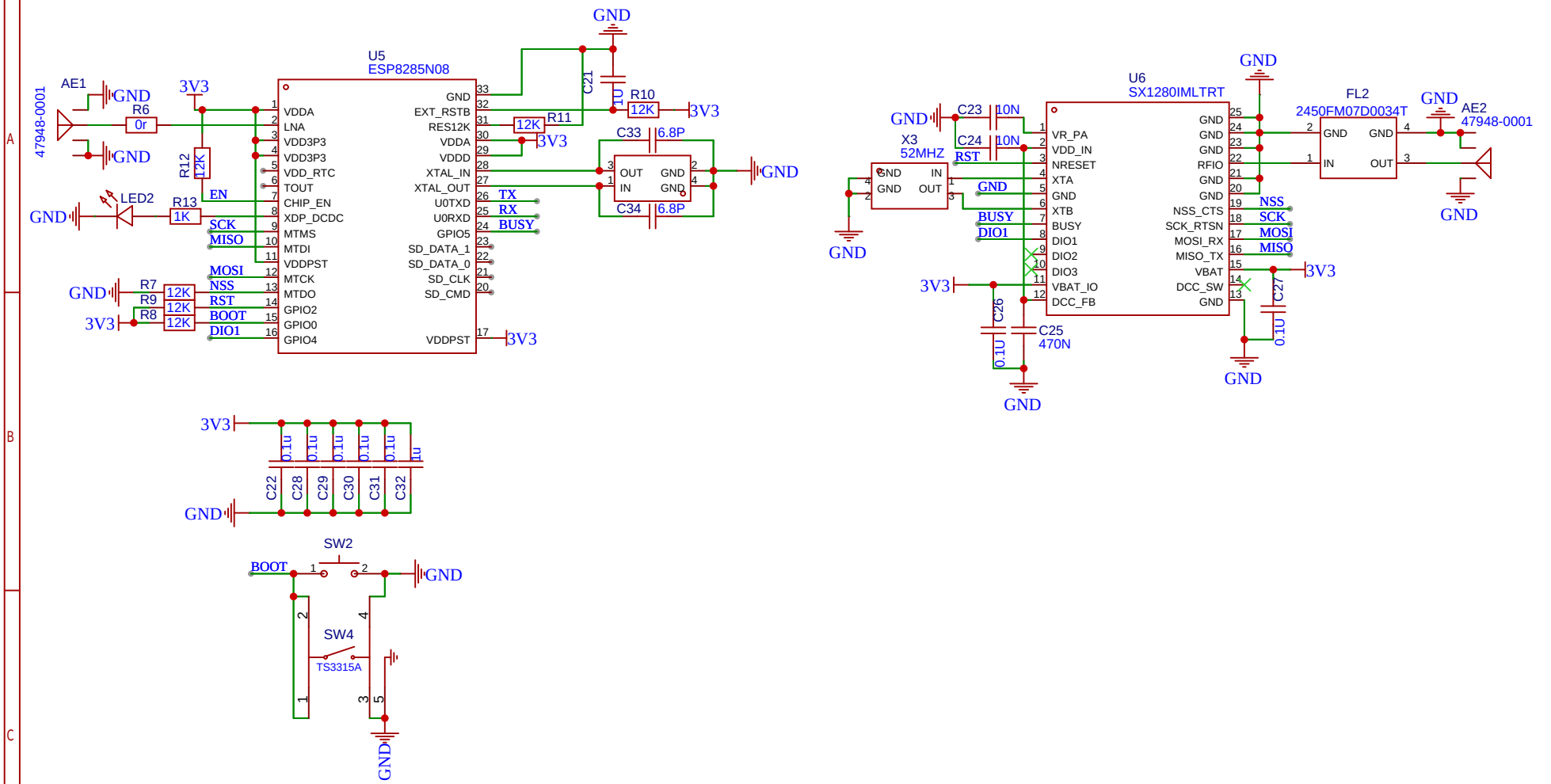

TITLE:		REV: 1.1
	Company:	Sheet: 1/1
	Date: Drawn By: HGLRC	