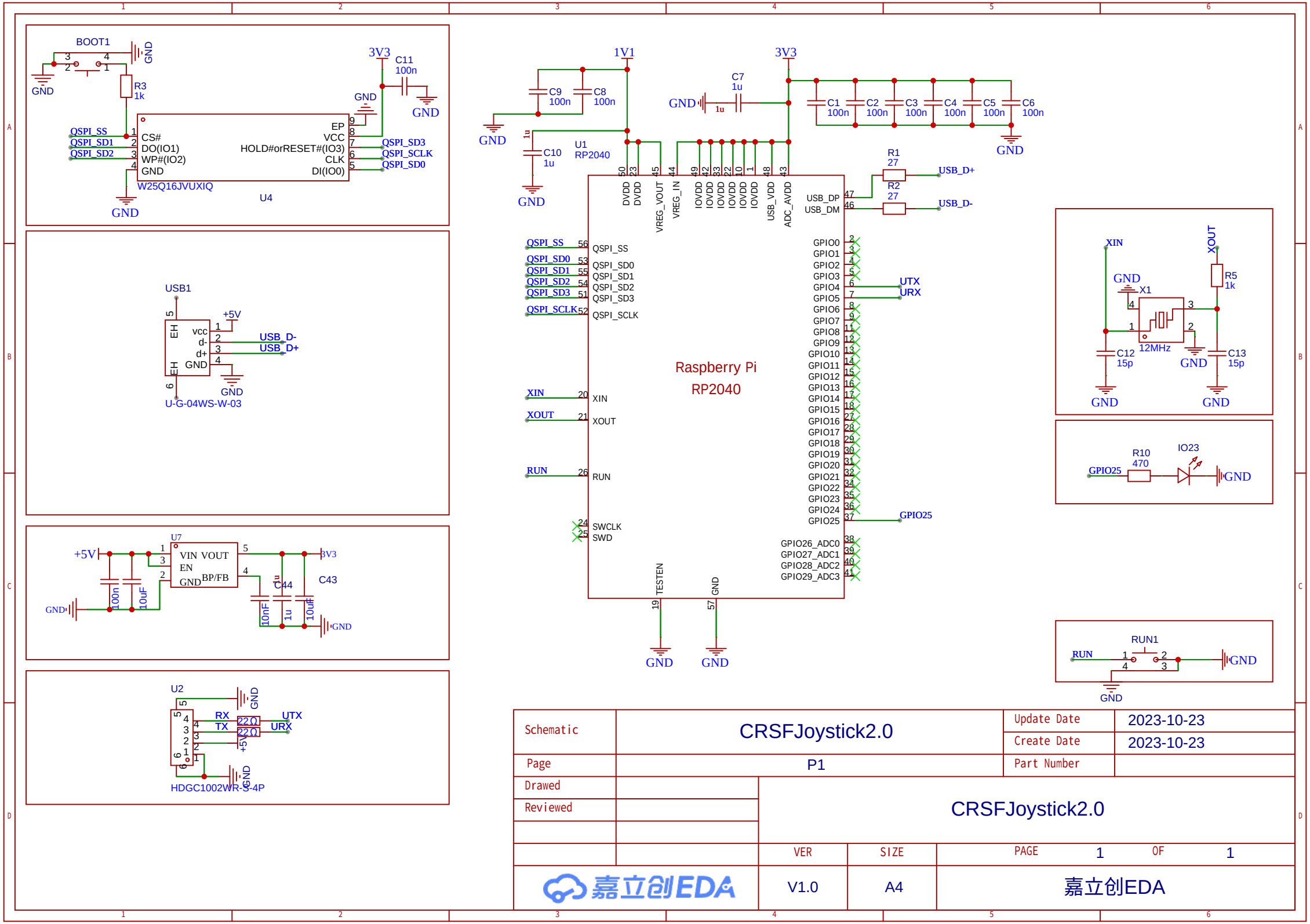

Schematic	CRSFJoystick2.0	Update Date	2023-10-23
		Create Date	2023-10-23
Page	P1	Part Number	
Drawed		CRSFJoystick2.0	
Reviewed			
		VER	SIZE	PAGE 1 OF 1
嘉立创EDA		V1.0	A4	嘉立创EDA