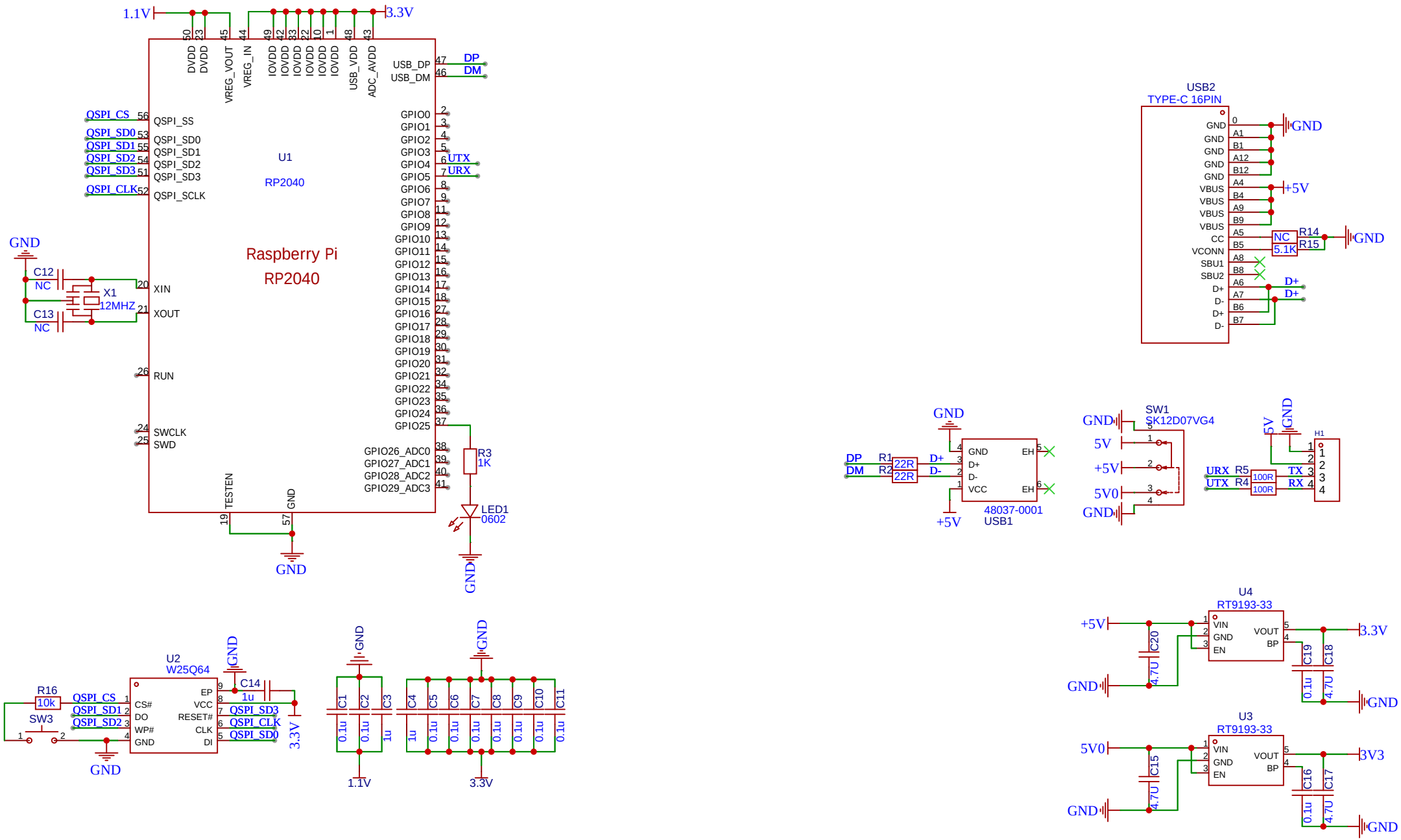

TITLE:	REV:
Company:	Sheet:
Date:	Drawn By: HGLRC