Scuttle robot Wiring Guide (rev 2019.02.06)

Important Info:

To match the beaglebone pins to the pin numbers on the diagram:

The tiny white circle on the silkscreen at each connector indicates “pin1”

All images of this style are copied directly from the beaglebone schematic

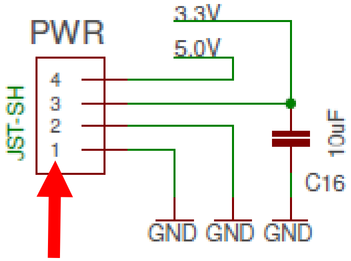
PWR
3.3V
5.0V
JST-SH
4
3
2
1
10uF
C16
GND GND GND

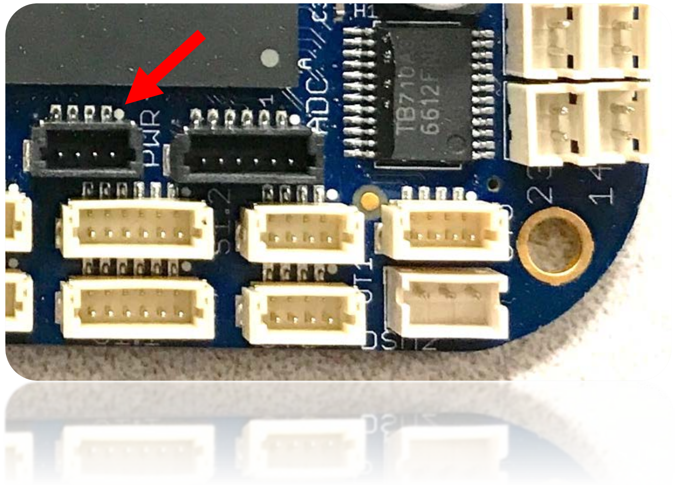

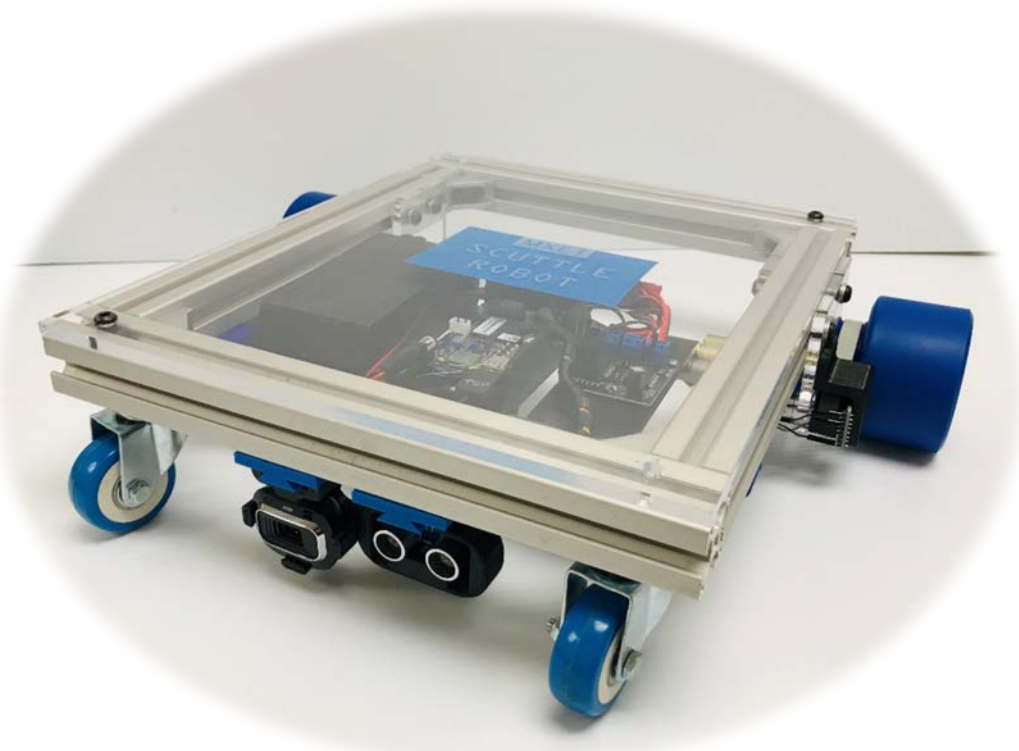
SCUTTLE ROBOT

All Sensors on BeagleBone

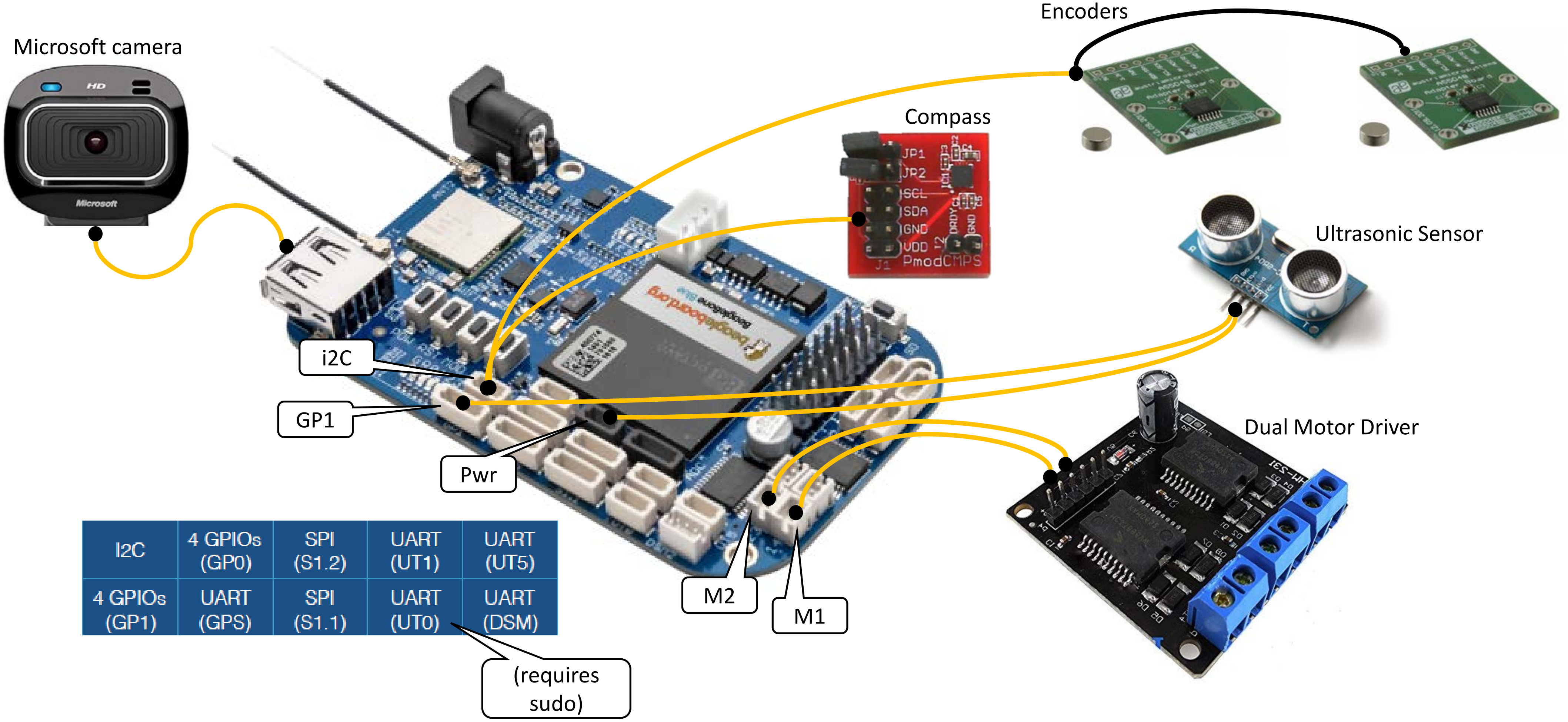
Microsoft camera
Encoders
Compass
Ultrasonic Sensor
Dual Motor Driver
i2C
GP1
Pwr
M2
M1
(requires sudo)

I2C	4 GPIOs (GP0)	SPI (S1.2)	UART (UT1)	UART (UT5)
4 GPIOs (GP1)	UART (GPS)	SPI (S1.1)	UART (UT0)	UART (DSM)

BeagleBone to Compass (I2C)

BeagleBone I2C Connector
Style: JST-SH 4-pin

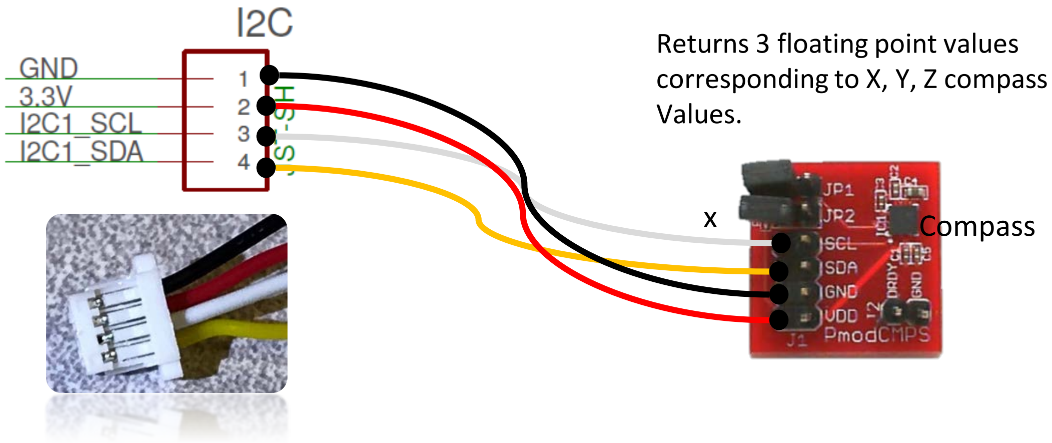
I2C
GND
3.3V
I2C1_SCL
I2C1_SDA
1
2
3
4
JS-SH
x
JP1
JP2
SCL
SDA
GND
VDD
J1
PmodCMPS
Compass

Returns 3 floating point values corresponding to X, Y, Z compass Values.

This diagram does not show encoders which couple to the same i2C bus

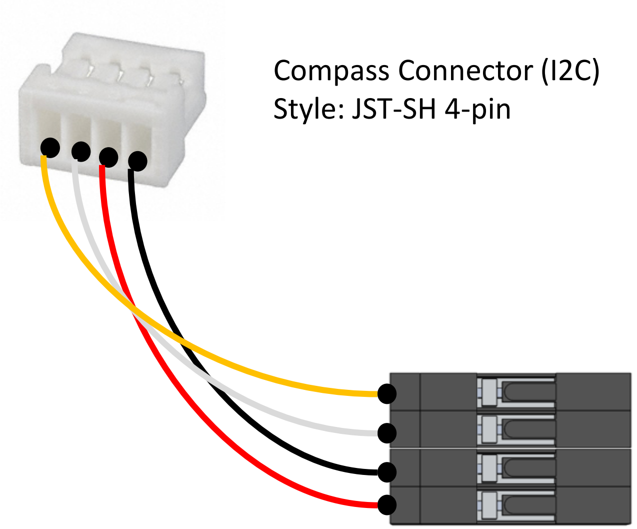

Compass Connector (I2C)
Style: JST-SH 4-pin

BeagleBone to Motor Driver (PWM)

M2 controls
Right motor

M1 controls
Left motor

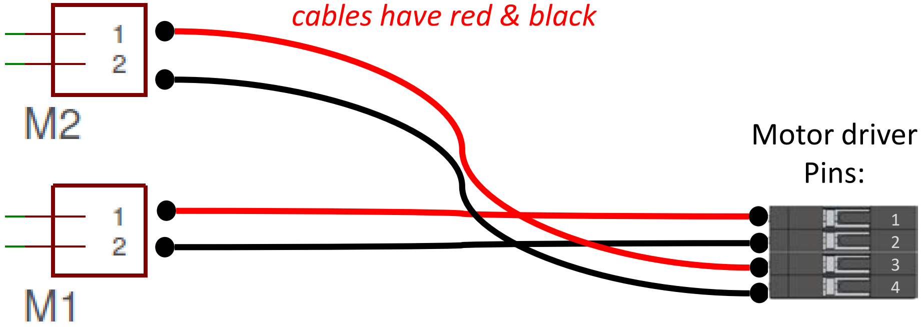

There is no "polarity" but some cables have red & black

Motor driver
Pins:

Ground is not connected because the BBB has a common ground to the battery pack.

HW 231 Motor Driver

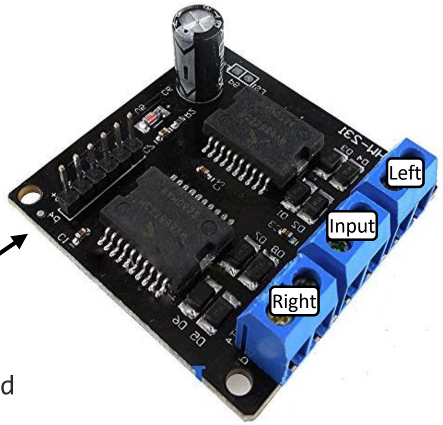

this is a mirrored image

L298N Motor Driver

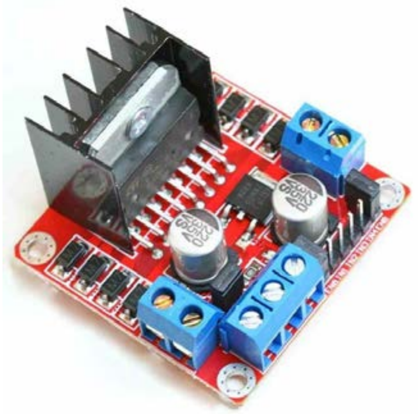

L298N is an alternative motor driver.
It has less current-carrying capacity.

Motor Driver Power Cables (18awg)

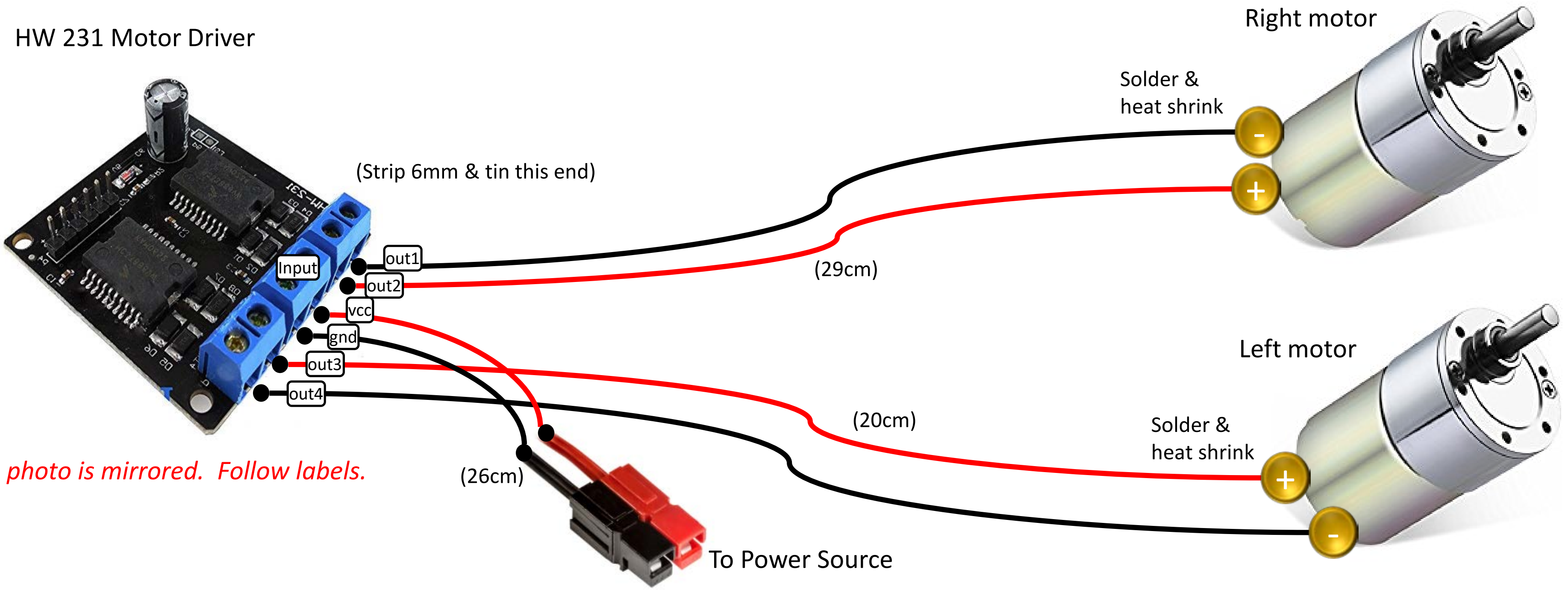
Input
out1
out2
vcc
gnd
out3
out4
-
+
+
-

HW 231 Motor Driver

(Strip 6mm & tin this end)

Right motor

Solder &
heat shrink

(29cm)

Left motor

Solder &
heat shrink

(20cm)

This photo is mirrored. Follow labels.

(26cm)

To Power Source

Ultrasonic Distance Sensor (GPIO)

Connector Style: JST-SH 4-pin

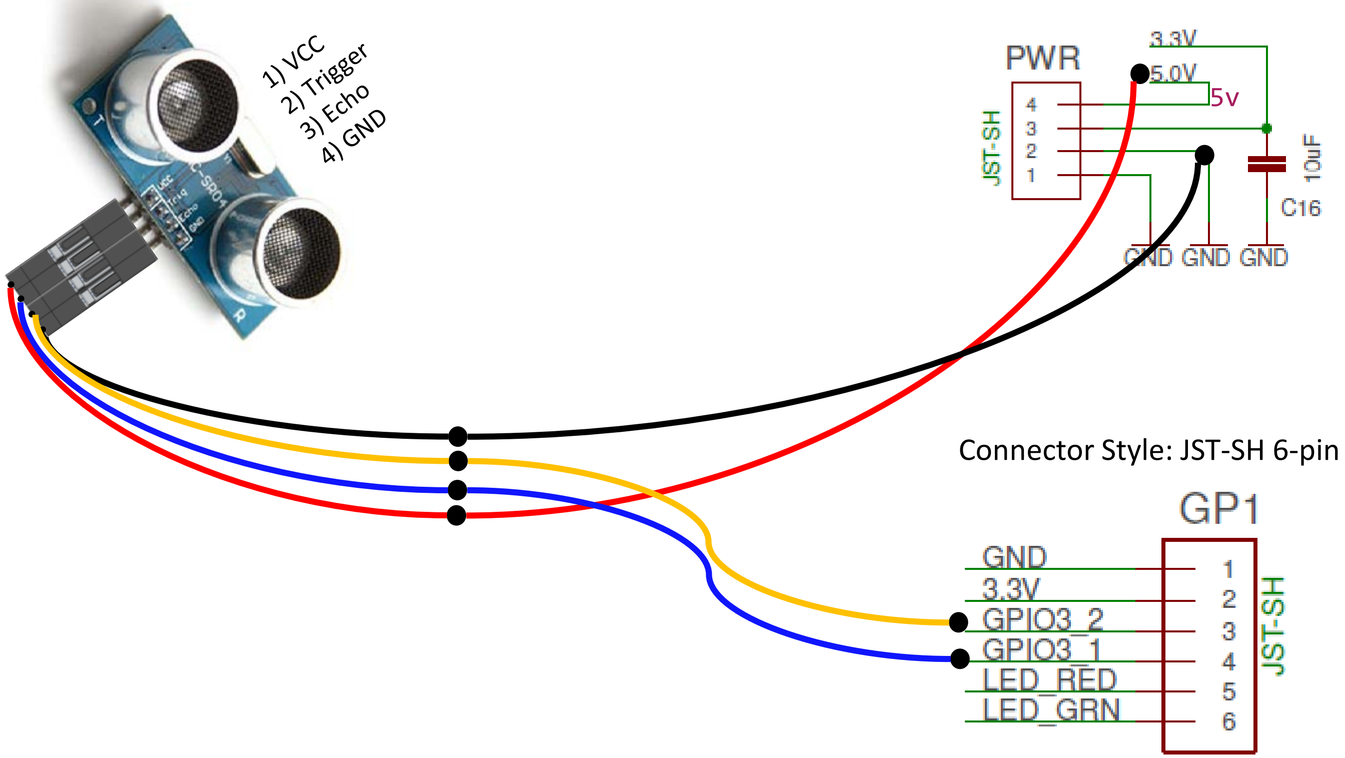
1) VCC
2) Trigger
3) Echo
4) GND
PWR
JST-SH
4
3
2
1
3.3V
5.0V
5v
10uF
C16
GND
GND
GND
GP1
GND
3.3V
GPIO3_2
GPIO3_1
LED_RED
LED_GRN
1
2
3
4
5
6
JST-SH

Connector Style: JST-SH 6-pin

Encoder AS5048 (I2C)

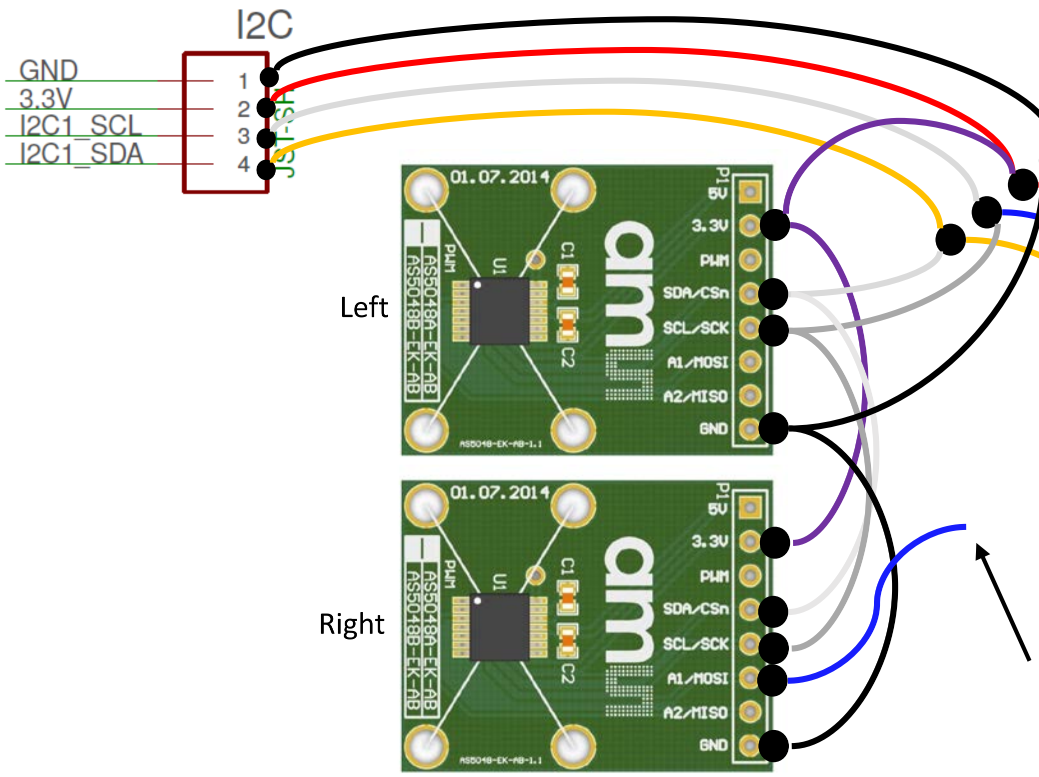
I2C
GND
3.3V
I2C1_SCL
I2C1_SDA
1
2
3
4
Left
Right
Compass
01.07.2014
P1
5V
3.3V
PWM
SDA/CSn
SCL/SCK
A1/MOSI
A2/MISO
GND
AS5048A-EK-AB
AS5048B-EK-AB
PWM
U1
C1
C2
JP1
JP2
SCL
SDA
GND
VDD
J1
PmodCMPS

Encoder with A1 pulled up to 3.3v is
encoder address 0x41 (right hand side)
Other encoder is 0x40 (left hand side)

Battery

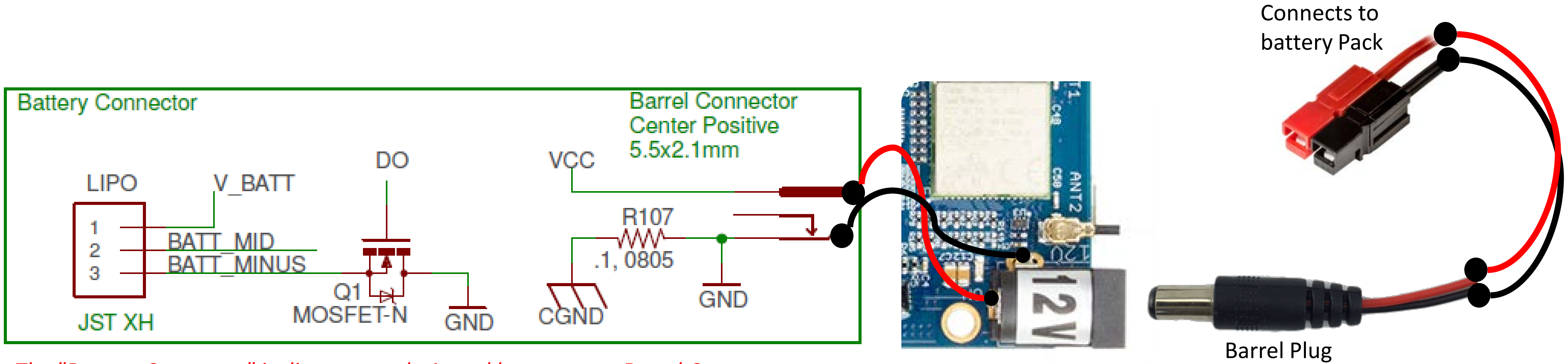
Connects to battery Pack
Battery Connector
Barrel Connector Center Positive 5.5x2.1mm
LIPO
V_BATT
DO
VCC
1
2
3
BATT_MID
BATT_MINUS
R107
.1, 0805
Q1
MOSFET-N
GND
CGND
GND
JST XH
12V
Barrel Plug

The "Battery Connector" is disconnected. Actual battery uses Barrel Connector.