Journal of Electroanalytical Chemistry 936 (2023) 117380

Contents lists available at ScienceDirect

Journal of Electroanalytical Chemistry

journal homepage: www.elsevier.com/locate/jelechem

# Potentiostat design keys for analytical applications

Dmytro Snizhko [a,b,*], Yuriy Zholudov [a,b], Anatoliy Kukoba [a], Guobao Xu [b]

[a] Laboratory of Analytical Optochemotronics, Kharkiv National University of Radio Electronics, 14 Nauky Ave, Kharkiv 61166, Ukraine
[b] State Key Laboratory of Electroanalytical Chemistry, Changchun Institute of Applied Chemistry, Chinese Academy of Sciences, 5625 Renmin Street, Changchun 130022, Jilin, China

ARTICLE INFO

*Keywords:*
Potentiostat
Operational amplifier
Integrated circuit
Electrode
Cell
Instrumentation
Ohmic-drop compensation

ABSTRACT

In this article the principles of potentiostat designs are discussed. Novel technical solutions for the design of electrochemical devices with a focus on portable applications are considered. Known solutions for analytical potentiostats are discussed, and the functionality of existing devices is analysed. Key points of the discussion include a brief introduction to specific terminology for potentiostat characterization, analysis of schematics, operation principles and requirements for basic units including control amplifier, voltage follower and transimpedance amplifier. Moreover, the substantial functions of potentiostat unit operation and corresponding limitations were described. The reasons for the inevitably high cost of versatile devices, as well as design recommendations for potentiostats, are also discussed. The proposed explanation will be helpful for potentiostats' comprehensive design and application in analytical practice, for recognition and exclusion of artefacts from experimental data.

## 1. Introduction

A potentiostat is a principal device for electroanalysis. Unfortunately, in many laboratories it is used as a black box. Insufficient description of electronics in chemistry books and poor discussion of potentiostats in electronics books due to specific area of applications do not assist understanding a potentiostat freely and easily. Many works of the last decade show the efforts of different authors to construct their own potentiostat. Although the description level of certain potentiostats related electronics is increasing in literature, unfortunately, this does not lead to a systematic understanding of the potentiostat's fundamentals. A potentiostat, as a complex electronic device, is the holy grail for electrochemists, so to defeat its mystic essence, its basics and features of usage are explained. The article explains theoretical principles and practical solutions of potentiostat schematic to remove misunderstandings between electronic engineers and analytical chemists in a discussion on potentiostat. Various realizations of potentiostat and its features are explained as the tricks and not magic.

Jaroslav Heyrovsky's discovery of the dependence of redox processes on electrodes polarization in a cell stimulates electronic engineers to design instrumentation assisting this kind of assay [1]. A polarograph and later a potentiostat had come as essential analytical instrumentation to chemical laboratories. The development of these valuable electronic devices is not pausing from the first days of their introduction. The evolution of electronic parts and components assumes refinement in the devices. A broad interest in electrochemical sensors requires corresponding low-budget instrumentation. The review of potentiostats (Table 1) has shown a diversity of commercial devices from manufacturing companies [2–6,18] as well as proprietary designs [7–28], monolithic solutions [29–31] and even open-source projects [8,9,11,13–15,19,26,31]. The latter opens access to ready-to-use solutions or can be a starting point for further adjustment to a specific task. This article discusses general questions of potentiostat schematic and analyses practical implementations, especially for pocket-sized devices. While desktop versions of potentiostats usually have extensive functionality, a different situation is for portable devices. Multiple functions and versatile capabilities of professional potentiostats are owing to a long list of electronic parts and reasonable schematics. And all that has its price. A portable version of a potentiostat is a compromise between cost, size of the case, complexity of built-in electronics and functional versatility. Secrets of engineering solutions for commercial devices or a lack of understanding of operation principles impedes new designs of front-end electronics for elec-

*Abbreviations:* CA, control amplifier; CE, counter electrode; EC, electrochemical; IC, integrated circuit; OCP, open cell potential; op-amp, operational amplifier; RE, reference electrode; Ref, references; LP filter, low-pass filter; TIA, transimpedance amplifier; WE, working electrode.

* Corresponding author at: Laboratory of Analytical Optochemotronics, Kharkiv National University of Radio Electronics, 14 Nauky Ave, Kharkiv 61166, Ukraine.
*E-mail address:* dmytro.snizhko@nure.ua (D. Snizhko).

https://doi.org/10.1016/j.jelechem.2023.117380
Received 9 February 2023; Received in revised form 20 March 2023; Accepted 21 March 2023
Available online 23 March 2023
1572-6657/© 2023 The Author(s). Published by Elsevier B.V.
This is an open access article under the CC BY-NC-ND license (http://creativecommons.org/licenses/by-nc-nd/4.0/).

**Table 1**
Modern potentiostats and their main features.

| Device | Data acquisition | Supported Techniques | Compliance voltage | Input Current Range | Supports Multiplexed Measurements | Connectivity | Dimensions WHD ($mm^3$) | Weight (g) | Price (USD) | Ref. |
|---|---|---|---|---|---|---|---|---|---|---|
| Sensit Smart | 1,000 datapoints/s | LS, CV, SWV, DP, NP, CA, CC, MA, PAD, OCP, EIS | −2.0 to +2.3 V | Multiple current ranges (±100 nA up to ±3 mA) | No | USB-C (phone, computer) | 43 × 11 × 25 | 10 No USB-C (phone, computer) | >700 | [2] |
| Palmsens 4 | 150,000 datapoints/s | LS, CV, ACV, SWV, DP, NP, CA, ZRA, CC, MA, FAM, PAD, MPAD, LSP, CP, MP, OCP, SCP EIS | ±10 V | Multiple current ranges (±100 pA up to ±10 mA) | With additional module | Bluetooth, USB (phone, computer) | 157 × 35 × 97 | ~500 | >5,000 | [3] |
| µStat-I 400 | Frequency range 1 mHz to 1 MHz | LS, CV, ACV, SWV, DP, NP, CA, ZRA, CC, MA, FAM, PAD, MPAD, LSP, CP, MP, OCP, SCP EIS | ±4 V | Multiple current ranges (±1 nA up to ±10 mA) | Yes (bipotentiostat) | Bluetooth, USB (computer) | 100 × 36 × 132 | 540 | >5,000 | [4] |
| CS100E | 150,000 data points/s | LSV, CV, ACV, SWV, DP, NP, CA, ZRA, CC, MA, FAM, PAD, MPAD, LSP, CP, MP, OCP, EIS | ±12 V | Multiple current ranges (±200 pA up to ±50 mA) | No | USB or Bluetooth | 150 × 90 × 30 | 500 | n.d. | [5] |
| ECAS 100 | | LSV, CV, SWV, DPV, IT, OCP | ±2 V | Multiple current ranges (±1 nA up to ±1 mA) | No | USB (flash card) | | | | [6] |
| UWED | 20 samples/s | LS, CV, SWV, DP, CA, CP | ±1.5 V | ±180µA | No | Bluetooth (phone) | 80 × 23 × 40 | 56 | ~60 | [7] |
| DStat | 30,000 samples/s | LS, CV, SWV, DP, CA, CP | ±1.5 V | Multiple current ranges (±1 µA up to ±100 µA) | No | USB (computer) | 92 × 31 × 84 | ~100 | ~100 | [8] |
| Cheapstat | Frequency Range: 1–1000 Hz | LS, CV, SWV | ±990 mV | Multiple current ranges (±100 nA up to ±10 µA) | No | USB (computer) | 140 × 28 × 66 | 115 | <80 | [9] |
| Enactsense | 2,000 samples/s | LS, CV, SWV, DP, NP, CA | ±1.5 V | ±10 µA | Yes (bipotentiostat) | Bluetooth (phone) | 75 × 15 × 45 | 50 | ~100 | [10] |
| SweepStat | n.d. | CV, LSV, CA, CC | ±1.5 V | Multiple current ranges ±10 pA up to ±1.5 µA | No | USB | 64 × n.d. × 89 | n.d. | 55 | [11] |
| KickStat | 230 samples/s | CV, CA, NPV, SWV | ±0.792 V | Multiple current ranges ±1.5 nA up to ±10 mA | No | USB | 20 × n.d. × 22 | n.d. | 11 | [12] |
| MYStat | 11 samples/s | CV, CA, SWV, OCP, + | ±12 V | Multiple current ranges ±2 µA up to ±200 mA | No | USB | 60 × n.d. × 81 | n.d. | 226 | [13] |
| – | 11 samples/s | CV, CA, SWV, OCP, + | ±8 V | Multiple current ranges ±10 nA up to ±25 mA | No | USB | 50 × n.d. × 50 | n.d. | 100 | [14] |
| ABE-stat | 2,000 samples/s | CV, DPV, EIS | ±1.5 V | Multiple current ranges ±0.1 nA up to ±10 mA | No | BLE, Wi-Fi | 74 × n.d. × 89 | n.d. | 114 | [15] |
| PSoC-Stat | 50,000 samples/s | CV, SWV, DPV | ±2 V | Multiple current ranges ±2.5 nA up to ±10 mA | No | USB | 120 × n.d. × 26 | n.d. | 10 | [16] |
| SStat | n.d. | CV, LSV, CA, SV | ±1.5 V | Multiple current ranges (±10 nA up to ±0.15 mA) | No | BLE | n.d. | n.d. | 50 | [17] |
| Rodeostat | n.d. | CV, LSW, SV, CVV, CA, MSV | ±10 V | Multiple current ranges (±10 nA up to ±1 mA) | No | USB | 145 × n.d. × 89 | n.d. | 200 | [18] |

troanalytical applications. The skills of an electronic engineer are necessary, but not sufficient, to design an appropriate potentiostat. To encourage researchers' efforts in designing new potentiostat solutions, the article discusses theoretical and practical approaches to the potentiostat schematic. Understanding the general concepts assists in finding the right solution and excludes regrettable mistakes in experiments even if the potentiostat is utilized as a black box.

## 2. Main and auxiliary functions

Registration of the current response to polarization stimulus looks like an ordinary job for chemists. In the case of a two-electrode electrochemical (EC) cell, the current–voltage curve combines information about both electrode processes. The itch to separate the study of processes at each electrode led to the invention the three-electrode potentiostat [32]. It helps to focus on one half-cell and isolate the observation of EC processes on the working electrode and eliminate effects on the counter electrode (CE) in the recorded current–voltage curve.

The polarization current flowing through the EC cell changes the equilibrium potential in the cell. Thus, the potentiostat should be able to monitor the equilibrium potential. The measured reference electrode potential is related to the equilibrium potential in the EC cell. Consequently, the reference electrode potential is used to monitor the potential difference between the working electrode and the solution, also known as the polarization potential. Since the analytical application of the potentiostat is the registration of the dependence between the current variation and the polarization potential, the potentiostat sets the potential difference between the working electrode and the solution according to the polarization program.

Therefore, a few principal functions of a potentiostat are sufficient: i) polarization of the counter electrode depending on the experimental program and the reference electrode potential; ii) measurement of the reference electrode potential (with or without its acquisition); iii) measurement of current through the EC cell. As it will be shown later, the three corresponding units are the base of almost any potentiostat. Moreover, in many cases a minimum set of operational amplifiers (op-amps) corresponding to the number of functional units (three) is not enough, but the schematic can be simplified to appropriate level by imposing certain limitations on the experimental conditions. Consecutively, a minimal front-end of a potentiostat consists of three op-amps.

Different schematics realizing the potentiostat functions can be classified according to the following features: i) which electrode is grounded (connected to a common line), ii) where/how the current through the EC cell is measured. Additionally, iii) the presence of ohmic drop compensation (iR-compensation), iv) the support of galvanostat mode, v) the support of electrochemical impedance spectroscopy (EIS), vi) the support of large polarization currents, vii) fast operation mode. Consideration of the general concepts of potentiostat will help us to further consider each specific group, so let's discover the potentiostat.

## 3. Basic schematic

The concept of a potentiostat is easily found in many electrochemical tutorials and primers [33,34]. In many cases, it is based on one operational amplifier, also called the control amplifier (CA). But it will not work in practice and is useful only for basic theory explanation. The main operation function of the potentiostat considered in the previous section requires essential electronic units that will be discussed further (Fig. 1). The polarization of one of the electrodes is done by the CA unit. The equilibrium potential of the reference electrode (RE) is measured by the second electronic unit, and frequently the non-alternate solution for it is a voltage follower (VF). Whereas the

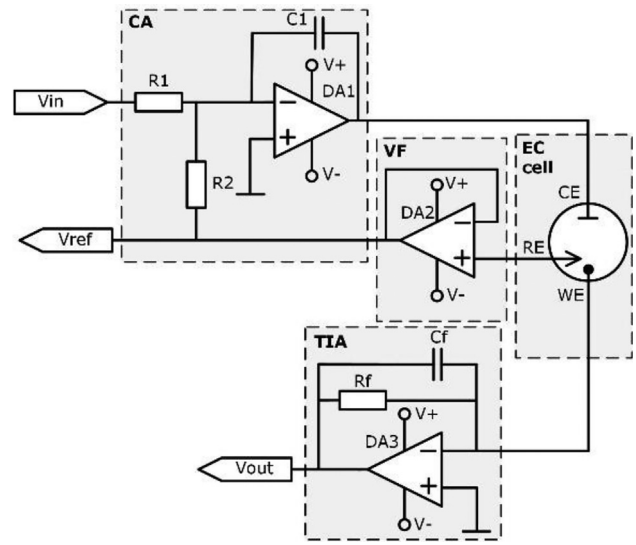


**Fig. 1.** Potentiostat based on summing amplifier and TIA.

measurement of current, necessary for analytical applications, is carried out by the third unit. The latter may have different implementations. The most convenient solutions are the transimpedance amplifier (TIA) or the shunt resistor. Their limitations, advantages, and disadvantages will be discussed further.

### 3.1. Voltage follower

When electrochemical analysts decided to replace the mercury electrode with other electrode types, the problem of the RE potential measurement in the EC cell has moved to the frontier. The transition from a two-electrode cell to a three-electrode cell is accompanied by the measurement of the potential of a high-impedance source - the RE. The requirement of low input current and high input impedance is satisfied by the voltage follower circuit based on op-amp. The usage of voltage follower for the RE connection is attractive in comparison to other op-amp circuits, so this unit is common for most potentiostats and seems uncompromising. It is used in most of the potentiostats reviewed in this work.

The CA based on the op-amp DA1 has a feedback loop via the RE (Fig. 1), and the VF based on the DA2 op-amp is connected to the RE. This loop is a negative feedback for the DA1 required by any op-amp. High impedance of the RE is complimentary to the requirement for the RE as a non-polarizable electrode, so it requires a low current flow through it. Thus, the input impedance of the measurement electronics should be huge, and the input current should be low. A good recommendation is an op-amp with an input current of the order of several pA (or better). A wide bandwidth is not critical, as it is better to have an op-amp with a low voltage offset and drift that minimizes errors in the measurement of the equilibrium potential.

### 3.2. Control amplifier

The potentiostat performance depends on the control amplifier capability to polarize the counter electrode of the EC cell. Its task is to drive the counter electrode in accordance to the polarization program, which is one component of its input signal and to correct the polarization program with respect to the equilibrium potential of the RE in the EC cell, which is another component of the input signal. External conditions, polarization, and electrochemical reactions determine the potential distribution in the cell. Maintaining the desired potential difference across the working electrode/solution interface requires connection of the voltage follower into the negative feedback

of the CA. So, we have several options for the design of this unit, and each of them has the VF connected to the inverting input of the CA to organize the negative feedback.

The CA circuit is designed as a summing amplifier [8–10,13,19–23] or as a differential amplifier of two signal sources [14,15]. In the latter case (Fig. 4), the polarization program is directly applied to the counter electrode (is fed to the non-inverting input) and the equilibrium potential is fed to the inverting input of the amplifier in a differential circuit. We have two different pathways for signals. Since the inverting schematic of an op-amp has advantages (note, that op-amps operating in the inverting mode have lower CMRR error [35,36]), so using the summing amplifier design of the CA based on the inverting op-amp schemeis more reasonable. Here signals are combined together via equal resistors at the inverting input of the CA op-amp (Fig. 1). The main function of the CA is the adding of signals while inverting is an auxiliary function that should be taken in account in the polarisation signal synthesis.

As a result, the application of an instrumentation amplifier as a CA and a RE signal amplifier is an irrelevant solution. Two different ways for signals propagation and the gain limit for the CA stage are not good for an op-amp driving a capacitive load like an EC cell. Bandwidth capability of instrumental amplifiers is limited to achieve high DC performance, so an instrumentation amplifier is not recommended for replacing the combination of the CA and the VF in a reasonable potentiostat design.

For the potentiostat in Fig. 1, the input voltage Vin corresponds to the polarization program. As the WE is grounded and the CA inverts signal polarity, thus the anodic current through the WE corresponds to the negative voltage range of Vin, and vice versa, the cathodic current through the WE corresponds to the positive voltage range of Vin, relative to the equilibrium potential measured by the VF.

Sometimes, the CA design is based on two op-amp cascades (Fig. 2), as the main op-amp DA3 is not able to provide a sufficiently high output current, so it is accomplished by a buffer op-amp DA4 with high output current. For example, such solution was applied in [13]. This design improves the load capability of a potentiostat, but an additional op-amp cascade increases the length of the feedback loop, introducing additional phase shifts and response delays. Buffers don't change the signal polarity, so the logic of the scheme operation remains the same. The buffer amplifier is a non-inverting voltage follower, i.e. the amplifier has high input and low output impedance. In a buffer circuit, the operational amplifier tends to oscillate with a capacitive load, which is a common property of EC cells, so a specific schematic solution is needed for the capacitive load cancellation or the usage of special amplifiers fitted to work with capacitive loads.

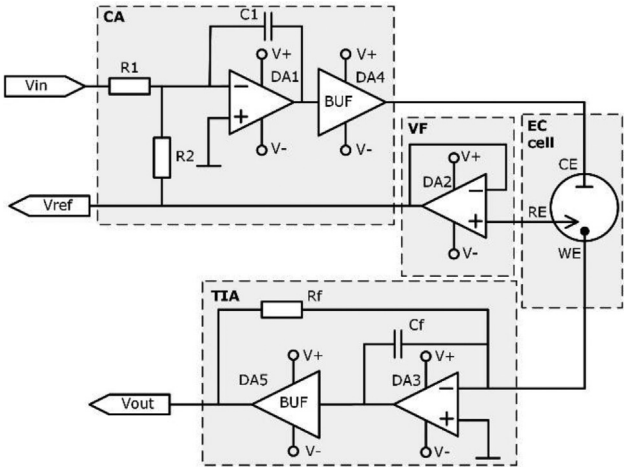


**Fig. 2.** Potentiostat based on buffered summing amplifier and buffered TIA.

Another note applies to two-electrode cells, which may be acceptable in the case of ultramicroelectrodes and nanoelectrodes usage as WEs. In this case a CE is also a RE, i.e. a reference electrode is used as a counter electrode in an EC cell (Fig. 3). In the case of a negligible area of the working electrode a small current through the cell doesn't disturb the equilibrium potential conditions at the reference/counter electrode [37,38]. In this case, the RE in combined with the CE, and the potentiostat works as a polarograph. The VF signal gets to the inverting input of the CA and transforms the CA into a voltage follower, which has a reduced bandwidth limited by the bandwidth of the op-amp in the VF stage (RE branch) and the added noise of the VF op-amp. A much better solution is to exclude the VF from the feedback loop and switch the CA to voltage follower mode using a local feedback loop.

Consequently, the second recognized principal unit in the potentiostat design is the VF, which receives the feedback signal from the RE and transmits it to the CA.

A feedback loop determines the function and features of the operation amplifier scheme. The usage of a limited gain amplifier [24,25] is a bad solution, since the CA drives the EC cell which is a capacitive load. Correspondingly, it should have a high open loop gain. The right solution is an open loop amplifier. Negative feedback loop based on VF and RE prevents the transformation of the CA into a generator circuit. As motioned above, the RE branch has limited bandwidth possibilities corresponding to high impedance and slow response. A small capacitor C1 in the negative feedback loop provides acceptable stability of the circuit operation and prevents oscillations and high-frequency noise. This capacitor is adjusted depending on the circuit design. Using an amplifier with a resistor in a negative local feedback loop gives up bandwidth and precision in favour of CA operation and dynamic characteristics.

The requirements to the op-amp used as a CA are low drift, high signal slew rate, low noise, low voltage offset, high gain and CMMR (common-mode rejection ratio).

The voltage swing at the CA output limits the polarization capability of the potentiostat, also called the compliance voltage, i.e., the maximum range of output polarization voltage of the CA. Taking into account that the feedback signal of the equilibrium potential is added to the program of polarization, the output voltage can be appropriately in a wider range. A broad range of output signal of this stage is essential to support potentiostat operation in different conditions.

### 3.3. TIA for current registration

To implement analytical capabilities the current signal through the working electrode must be recorded. Following the principle of charge conservation in electric circuits and the assumption that the RE branch doesn't consume current, measurement of the current flowing through the working electrode and through the counter electrode is equivalent. This is true as long as the current of the working electrode significantly exceeds the current flowing through the RE branch, and consequently the input current VF. Since the pA range is characteristic for microelectrode systems, it is preferable to measure the current through the working electrode.

Driving of the counter electrode forces the grounding of one of other electrodes. The grounding of the working electrode is a good choice because the RE at equilibrium potential is well processed by the VF. For this reason, the application of a TIA (or current-to-voltage converter) is the correct solution. The op-amp in the TIA circuit has extremely low input impedance. The connection of the non-inverting input to the ground line also forces the operational amplifier to drive the inverting input to ground potential via its negative feedback loop. Thus, the working electrode is virtually grounded by the TIA's op-amp. This virtual grounding is active as long as the TIA op-amp is operating in the linear range, i.e., too high current can overload the TIA and disable its ability to compensate for the polarization current driven by the

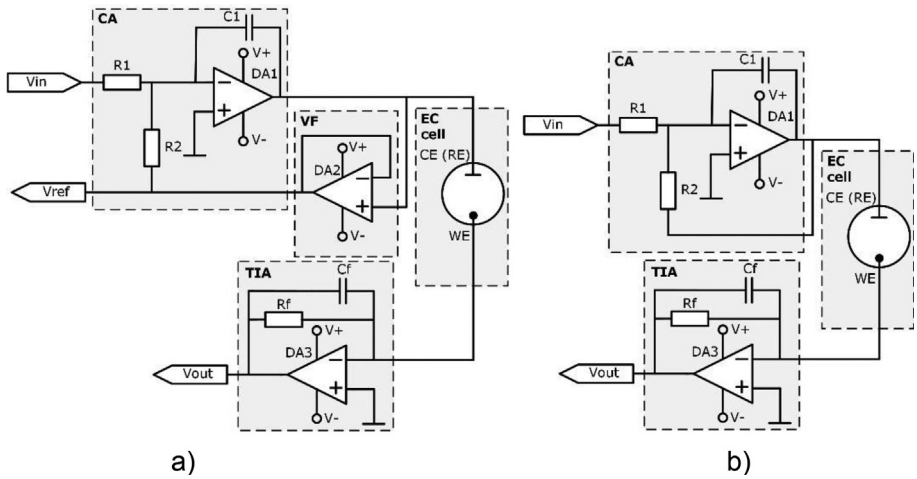


**Fig. 3.** Potentiostat operation in polarograph mode: a) reconnection for 2-electrode cell driving, b) pure polarograph (VF + TIA).

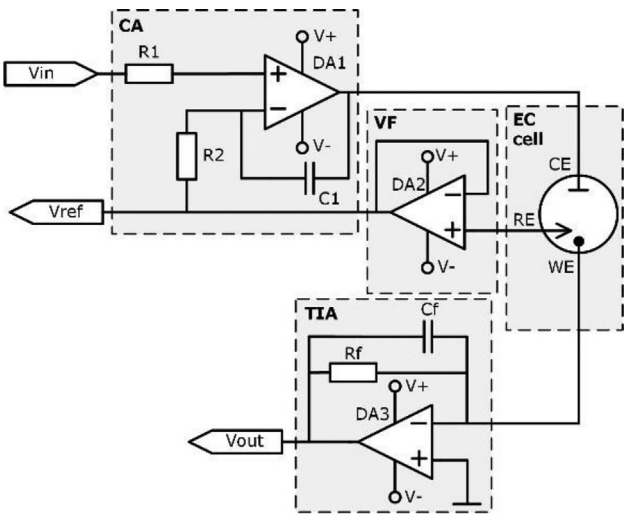


**Fig. 4.** Potentiostat based on differential amplifier and TIA.

CA, resulting in the potential of the working electrode being different from the ground potential. Therefore, it is necessary to choose the correct range of current for the whole experiment, because a violation in one part of the polarization program violates the plan of the whole experiment. TIA is implemented in potentiostats discussed in works [7–10,15–23,26,29–31].

Moreover, the property of an op-amp to balance the potentials of its inputs can be used to drive an EC cell by a TIA [11,39].

The compliance voltage is a significant characteristic of the potentiostat, and it is determined by the swing of the CA output signal. The requirements for TIA and VF op-amps have not yet been specified. Since VF should be able to repeat the cell equilibrium potential, the latter should be within the supply voltage range of VF. A solution potential, developing around the RE due to the current of the EC cell, driven by the counter electrode, shifts the VF potential accordingly with the potential program and the equilibrium potential. Thus, the compliance voltage also depends on the voltage swing of the input and output signal of the op-amp in the VF. Therefore, the VF power level is the same as that of the CA.

Operating principles do not require a wide range of input voltage at the TIA input stages, since under normal operating conditions the input pin is virtually grounded. But it is a different situation if we have uncertain conditions in the experiment. What happens to the potentiostat under overcurrent polarization conditions or when the working electrode touches the CE? The TIA Inputs should be tolerant to the compliance voltage of VF and CA. As a result, powering levels for all op-amp stages are often the same, i.e., the same supply voltages in all three units.

The essential outcome of using TIA is the implementation of the op-amp with the output current corresponding to the CA output current. Even if the TIA output current doesn't flow through the EC cell, it should be equal in amplitude and opposite in sign as it flows through the feedback loop resistor Rf. Therefore, the output current requirements of the TIA op-amp are the same as those of the CA op-amp. Consequently, buffering of the CA is frequently accompanied by the TIA buffering (Fig. 2, DA4 and DA5 correspondingly) to have similar capabilities in driving the current of the EC cell. The feedback here is reorganized, the output buffer stage DA4 is included into the feedback loop made by RE-VF-R2 branch, while DA5 buffer requires the reconnection of the TIA feedback resistor Rf to link the output of the buffer DA5 and the inverting input of the DA3. This solution can be found in [19,26].

### 3.4. Shunt resistor as a current sensor

A shunt resistor is a common solution for examining electric current in electronics. Its advantages are that it can be installed into a WE branch (Fig. 5a) or a CE branch (Fig. 5b) [13,14], the low side solution and the high side solution, correspondingly, are references to the grounded WE. A differential amplifier with low input currents is sufficient to measure the voltage drop across the shunt (sense) resistor. In this configuration the overrange of current measurement doesn't disrupt the potential program execution. Changing the resistor shunt gives the possibility to select the corresponding measuring range. High current measurements are simple enough, because the requirement of a proper high power shunt resistor as opposite to a high current op-amp for the TIA is less expensive.

In the circuits shown in Fig. 5 the current-sense amplifier is symmetrical, so the gain is determined by the ratio of Rf to Rin. Appropriate matching of the shunt resistor and signal amplification are required.

As we discussed, measuring the current in the counter electrode branch is possible, assuming the RE current is negligible. For this reason, a shunt resistor is connected between the CA output and the counter electrode. A differential amplifier is used to measure the current through the counter electrode, which assumes equality of currents though the EC cell and the working electrode. The voltage drop across the shunt resistor reduces the compliance voltage and additionally increases the total load impedance for the CA.

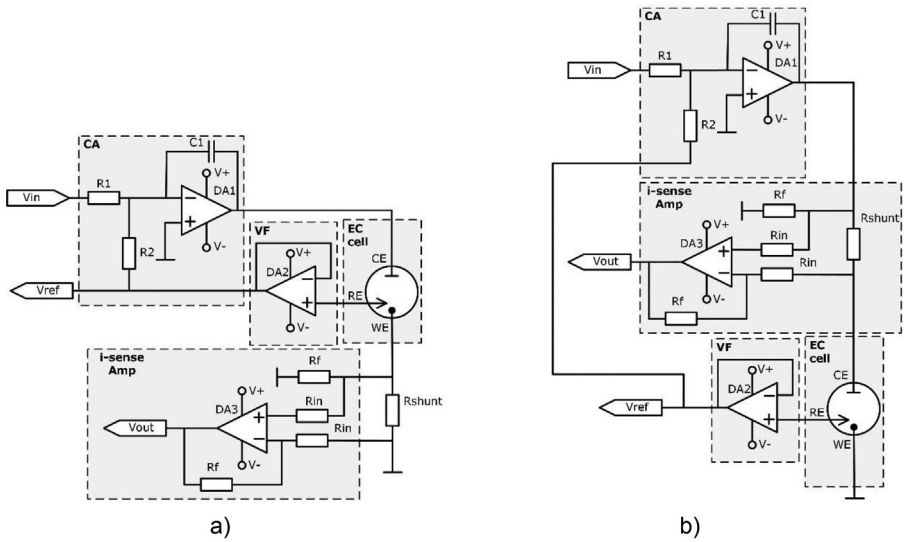


**Fig. 5.** Potentiostat based on the summing amplifier and current shunt in: a) WE branch (low-side); b) CE branch (high side).

In some cases, a shunt resistor can be placed on the working electrode side and replace the TIA. In the case of grounding the working electrode with a shunt, the current measurement is possible by a differential amplifier or a voltage amplifier based on op-amp.

A number of disadvantages are associated with the use of a shunt resistor in the potentiostat design, especially in the case of measuring low current. Since the shunt measurement is correct when the input current of the op-amp connected to the shunt is sufficiently lower than the current through the shunt, it is unacceptable for measurement of weak currents. The additional voltage drop across the shunt reduces the compliance voltage of the potentiostat. When the shunt resistor is placed in the CE branch, it is included in the feedback loop of the CA, and the voltage drop across the shunt is compensated. When the shunt is in the WE branch, compensation of its ohmic voltage drop requires additional efforts. The shunt resistance supplements the EC cell resistance and correspondently disturbs the output signal (current) as a response to the polarization program. This solution is also acceptable for current buster implementation, as the shunt resistor replaces the TIA, so the current buffer is unneeded for the absent TIA. Another incentive to implement measurements with a shunt is utilization of an op-amp with a limited slew rate for the CA. The adding resistor in the working electrode branch is an actual compromise for monolithic IC solutions with low-voltage and low-power consumption strategy even with the TIA implementation [29–31].

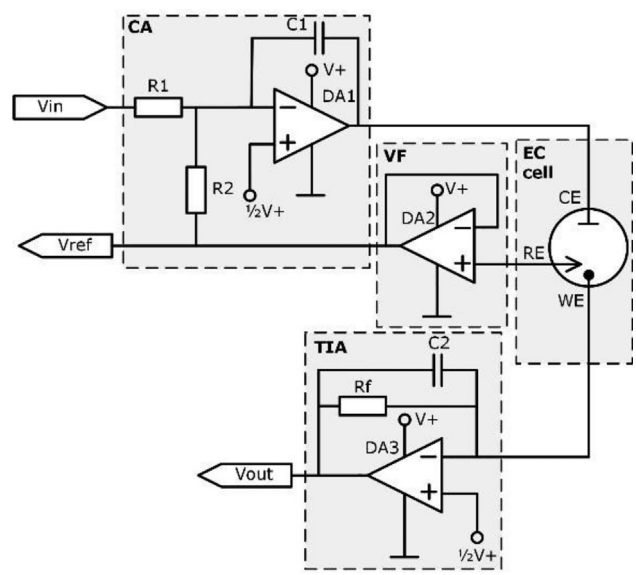


**Fig. 6.** Potentiostat with unipolar power supply.

## 4. Unipolar powering

Previously, schematics based on a bipolar power supply were discussed. It is a universal solution for desktop potentiostats when the reasons for miniaturization and minimization are not critical. For portable devices, power consumption and reduced schematic complexity are decisive factors. Unipolar solution was used in works [7–10,12,15,29–31].

When you first look at the diagram in Fig. 6, the usage of a unipolar source seems simpler than the usage of a bipolar source. The advantage of this solution is that the number of DC sources to power op-amps is at least twice less. But nowadays, a power management IC can include several DC-DCs, so the problem of the complexity of the power supply unit is not so critical. Modern EmStat4 potentiostat by PalmSens, Co. has a bipolar power supply schematic based on ADP5071 IC (DC-DC switching regulator with bipolar output) [3].

The broad supply range helps to achieve high compliance voltage of the potentiostat, unlocking all the possibilities of op-amps, i.e., high output voltage slew rate, open-loop gain. Switching to unipolar power supply corresponds to the reduced power supply range because the ±15 V bipolar source corresponds to the +30 V DC unipolar supply to preserve the performance of op-amps. But unipolar powering is frequently accomplished by the reduced voltage range, as a compromise for general optimization of the potentiostat. Narrower voltage ranges allow choosing modern low-voltage op-amps that minimize the power consumption of the device. So, the degradation of compliance voltage magnitude and dynamic characteristics is compensated by improvement in power consumption of the device and the simplicity of the power supply schematic.

Power circuit asymmetry makes the unipolar scheme susceptible to interference, especially to noise in the power circuit.

A common problem of a unipolar power supply strategy is the voltage swing, which limits signal processing at potentials close to the power supply output voltage and common (grounding) line potential. Even the use of rail-to-rail op-amps doesn't eliminate the problem totally, so a loss of resolution occurs during digitizing unless additional signal conditioning or ADC dynamic range tuning is implemented.

Note that in the case of bipolar supply, the ground potential is applied to the Faraday cage or the protective shields around wires. In the case of unipolar supply, if the shielding potential differs from the ground potential, it is necessary to form the shielding potential (its value is often a half of the source voltage) by an additional op-amp or a linear voltage regulator (a simple resistor divider is not enough).

Besides, the problem of electrode connection shielding is solved in a more complex and proper way [8,15]. Two additional buffers at the outputs of CA and VF (connected to the RE) produce potentials for the CE and RE shields. Obtained potentials protect the corresponding signals in the connection wires with potentials from the corresponding electrodes. The protective shield of the grounded WE is connected to the ground line. In the case of a single polarity supply, a third op-amp VF have to be used for the TIA, because the non-inverting input of the op-amp in the TIA has a different potential than the ground level, so the WE has a different potential than the ground line of the scheme.

## 5. Fast polarization and stability

If interest is in the analysis of fast processes, corresponding capabilities of the instrumentation are crucial. A potentiostat capable of characterising fast electrochemical reactions should support fast operation modes of electrochemical techniques. This potentiostat capability is often described by the support of linear-sweep voltammetry (LSV) at the maximum potential sweep rate (or scan rate). Withal the differentiation into groups is relative, potentiostats with a sweep rate under 10 V/s is a general purpose device, fast potentiostats can operate in the range up to 10 000 V/s [19], and ultrafast devices exceed the latter value [37–39], and some of them are capable of reaching a scan rate up to several megavolts/s (MV/s). But how does the bandwidth of a schematic correspond to the sampling rate? Direct digital synthesis for signal generation and data acquisition should have a sampling rate sufficient to provide required bandwidth and vice versa, correspondingly to Nyquist theorem. The sampling performance of the digital part should be approximately several times higher than the bandwidth. For example, if the bandwidth is about 100 kHz, a sampling rate of 1 Msamples/s is adequate. To compare the capabilities of instrumentation in different term domains, the reasonable estimate in [40] is that a device supporting a scan rate of 1 MV/s should have a bandwidth of up to 20 MHz and a sampling rate of up to several hundred Msamples/s or even several Gsamples/s.

In a potentiostat, signal processing takes place for both the excitation signal generation and the response signal acquisition. If the digital signal processing is left out of the brackets, it is the CA that determines the excitation signal for the EC cell. Thus, the slew rate and dynamic characteristics of the op-amp in the CA unit are essential and must be taken into account when forming the excitation signal. This characteristic influences the dynamics precision of potentiostat to generate polarization potential on the counter electrode. When selecting an op-amp for the CA unit, the conductivity and capacitance of the cell connected to the potentiostat should take into account as the maximum operating output current and the maximum capacitive load characteristics of the op-amp.

Another task of signal processing is associated with data acquisition in the current measurement unit. In the case of TIA, the low current measurements, associated with the op-amp scheme containing high impedance feedback resistor, are sensitive to capacitance in the feedback line. As a result, increasing TIA sensitivity reduces the bandwidth characteristics of current registration. The measurement of fast high current signals in electrochemical analytics is less reliable since larger electrode area corresponds to higher capacitance. The rate of current rise for non-faradaic processes is higher than for the faradaic ones when the polarization scan rate increases. Therefore, the non-faradaic current masks the faradaic current at a high polarization rates, and fast and ultra-fast technics are attributed strictly to ultramicroelectrode and nanode applications to keep appropriate level of faradaic current from the cell output signal sufficient for its processing.

## 6. Electrochemical impedance spectroscopy

Electrochemical impedance spectroscopy is a useful analytical technique based on the registration of EC cell response to a specific stimulus. The aim is the examination of the active and reactive parts of the EC cell impedance. For this reason, the probe reaction is a reversible electrochemical reaction, and the main stimulus fixes the potential on at the equilibrium level of the reversible reaction in the EC cell, which corresponds to zero current or zero response. Additionally, the auxiliary excitation signal modulates the main by a small amplitude (5–20 mV), which doesn't disturb the balance in the EC reaction, but assists in measuring the cell conductivity at different frequencies. A modulation signal, such as a white noise signal or a sine signal with frequency scanning, is utilized and the corresponding response is filtered and processed. The magnitude and phase of the response are recorded and the data is processed. The technique is called the Fast Furie Transformation (FFT) EIS if the data processing involves FFT calculations.

For the front-end electronics, the main changes concern the mixing of DC and AC excitation signals, since the DC and AC parts are formed separately to ensure high measurement precision. So, the transfer function of the CA or additional control of potential at the CE (control point Vce, in Fig. 7) is sufficient. The CA of the potentiostat, designed as an inverting amplifier, can easily be modified for EIS by inserting an additional input resistor of the same value R3 = R1 as the main one (Fig. 7). Vin1 and Vin2 inputs are used for synthesized signals to drive the EC cell.

The TIA requires corresponding changes to be made. Cf is reduced to obtain maximum TIA bandwidth. The TIA is equipped with a filter for a specific frequency corresponding to the low-amplitude excitation signal. The filtering is possible by digital data processing, which needs implementation of a digital data processor, or by transferring the raw data to a PC.

EIS functions are claimed for potentiostats described in [2–6,15,26].

Above we have discussed the potentiometric EIS technique, and for galvanostatic EIS the potentiostat should be modified into a galvanostat.

## 7. Galvanostat

Potentiostat vs. galvanostat are i) polarization voltage or polarization current applied to the EC cell, ii) current through the WE or poten-

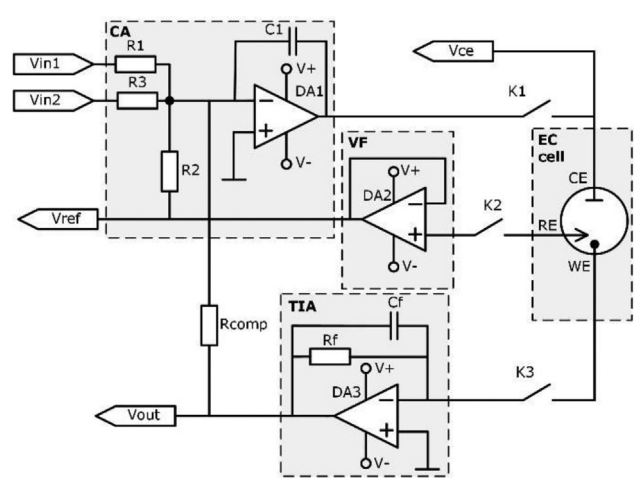


**Fig. 7.** Potentiostat with additional functions.

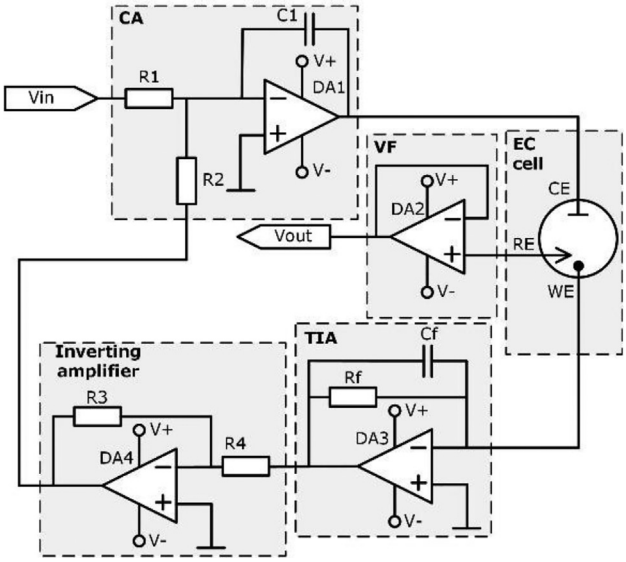


**Fig. 8.** Galvanostat.

tial at the WE-solution interface measured correspondingly. Potentiostat obtains mentioned capabilities by the scheme transformation from Fig. 1 to Fig. 8.

To summarize the above, in order to have a universal device with both functions, we should have: i) reconnection of feedback loop for the CA between the VF and the TIA (inversion is sufficient for the TIA signal), and ii) measurement (and digitization) of current through the WE and potential at the RE. The RE potential measurement is valuable for open cell potential (OCP) techniques. Most galvanostats are similar to potentiostats, so a universal potentiostat/galvanostat is a usable option for a modern device that is easy to realize by switching the feedback loop, such as in [14,26]. The current measurement channel, often the TIA output, is used for the feedback loop in the case of a galvanostat. Since the TIA inverts the signal, thus in the feedback loop from the current measurement, to drive the CA, an additional inverting amplifier AD 4 is inserted between the TIA and the CA to correct the signal polarity (Fig. 8).

## 8. iR-compensation

Resistances of solution between the CE and the RE and between the RE and the WE are included in the measurement scheme, but of interest is the observation of the EC reaction at the WE. Therefore, potentiostat operation focuses the interest at the WE/solution interface, so the solution resistance effect should be eliminated. The resistance between the CE and the RE is compensated, since it is included in the feedback loop of the potentiostat. The solution resistance between the RE and the WE remains a problem known as ohmic drop. Several iR-compensation techniques have been developed to compensate for the voltage drop resulting from the EC current flowing through the cell [33,34,38,39,41–43].

One of them is the ohmic voltage drop compensation with a short-term breaking of the measurement circuit to examine the solution conductivity and form corresponding compensation added to the excitation signal. This transient iR-compensation technique is called the current-interrupt [33,34,41–48]. Another employed transient technique is the injection of a low current pulse or the application of a low voltage pulse to determine uncompensated resistance and synthesize a corresponding compensation signal [49–51]. Both of these techniques allow determining the amount of compensation during the experiment, but slightly interrupt and disturb electrochemical processes.

An alternative approach to transient techniques for iR-compensation is an interstage positive feedback loop between the TIA and the CA - Rcomp (Fig. 7). This method is simple but requires prior information about the ohmic drop and assumes stability of the ohmic drop value during the experiment. The TIA inverts signal polarity, and the feedback loop is positive compared to the negative feedback of the RE branch [33,34,41]. The interstage feedback affects the potentiostat scheme stability, so the matching of the bandwidths of the op-amps in the stages is essential. Often commercial devices support one or several of these techniques [3–5]. At the same time one of the discussed custom potentiostats is confined to the technique with an interstage positive feedback loop [19].

An attractive iR-compensation technique was described by D. Wipf in [52]. The analog positive feedback loop was replaced by a digital feedback loop, i.e., the polarization program was corrected depending on the digitized current value. In his work the author claims that the small delay of the iterative technique is negligible for an EC experiment when synthesis rate and digitizing sample rate are high enough. On the other hand, the implementation of this technique doesn't eliminate the need to determine the cell impedance before or during the experiment. Thus, it doesn't matter whether to implement iR-compensation by software or hardware, since it is still a positive feedback loop in the polarization control of the EC cell. This loop covers the whole potentiostat, which is not suitable for ultrafast EC techniques and can be overcome by using a technique based on local positive feedback loop for TIA [39].

## 9. Discussion

As it was already found out, the op-amps for the different units have both common as different requirements. But the designer can find an op-amp appropriate for all stages and minimize the number of ICs by using double- or quad- versions of op-amp ICs. In today's market, the integration of op-amps is possible only for the same type. Multiple op-amps in a single IC chip help reducing PCB area, and the cost of integrated op-amps is correspondingly less than for individual cases (chips). The solution using quad-version of op-amp in all stages is given in [19].

### *9.1. Cell connection*

Shielding of the connecting wires between the potentiostat and the EC cell was discussed in the section "4 Unipolar powering". The initial polarization potential for the EC cell is a relative point depending on experimental conditions. A good solution for the experiment is to initialize the cell potential using the results of the OCP measurement. For this purpose, it is necessary to disconnect the CE in the cell and determine the zero-current electromotive potential that corresponds to the equilibrium potential in initial conditions. In order to do this, it is necessary to measure the output VF signal. Thus, in order to support this valuable function, we have an additional measuring channel in the potentiostat.

Moreover, if an experimenter has to reconnect the electrode in the EC cell, a good protection by disconnecting sensitive op-amps of RE and WE is also necessary. The disconnection is also usable during the pause between experiments when the EC cell polarization is prohibited. Thus, we can see that the ability to disconnect the potentiostat from the EC cell is a necessary feature that expands the potentiostat's capabilities and improves its reliability, protecting it from damage by electrostatic discharge from the operator during hand manipulation with the EC cell.

The electrical connection of the EC cell is not straightforward. The switch-on resistance for RE and CE branches is negligibly low. The RE branch has high impedance and the CE branch resistance is compensated, just like in the potentiostat feedback loop. The WE connection

resistance is the main one since it is located in the current measurement branch of the TIA. The switching-off resistance (or the leakage current) is also important. The pA level leakages should be avoided if the potentiostat works with ultramicroelectrodes. These requirements determine that reed relay connectors are common for desktop potentiostats. The disadvantages of reed relays are: high current consumption for operation with a current of tens mA or more, high cost (a Hi-Fi reed relay with noble metals alloy for low contact resistance costs 30–100$) and relatively large dimensions. All this forces engineers to replace them with modern CMOS switches, such as MAX 4737 in [8] or ADG715 in [15]. CMOS switches are characterized by low current consumption and small packages, but they have relatively high leakage current (3 pA and more) and high switching-on resistance (of the order of Ohms and higher). They are not appropriate for ultra-low current measurements (current range below 1nA).

### 9.2. Electrode grounding

In the general case, any of the cell's electrodes can be grounded (virtually) in a potentiostat. Information about which electrodes are grounded is discussed in [53,54]. Frequently, the alternative to the WE grounding is the CE grounding. The case where WE is grounded (Fig. 5 b) was analyzed earlier. The CE grounding scheme is shown in Fig. 9, the differential amplifier DA1 drives the non-inverting input of the TIA op-amp so it determines the potential on the WE. The VF measures the RE potential and adds it as a feedback signal to the polarization program using the DA 1 differential amplifier. The problem of this scheme is that the TIA produces a shifted signal relative to the polarization signal, so the differential amplifier DA4 generates the potentiostat output signal as the difference of the TIA signal and the WE polarization signal. The first problem of the scheme is that the control loop contains three amplifier stages DA2-DA1-DA3 which is not good for scheme stability. The second problem is that the VF output has a potential referencing to the ground which is the CE potential, and does not represent the potential difference across the WE-solution interface.

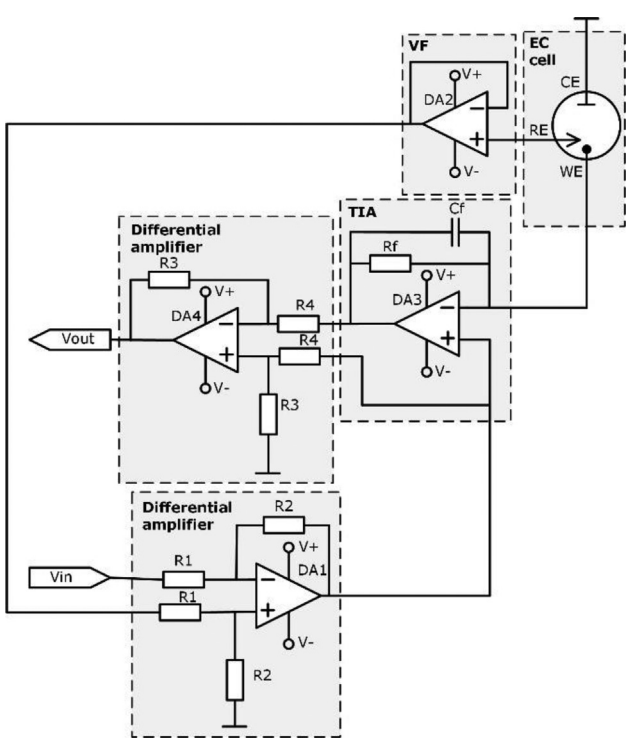


**Fig. 9.** Potentiostat with CE grounding.

In order to have the freedom for electrode grounding choice a flow potentiostat is proposed, which is a more universal solution [54].

### 9.3. Sense lead

An extra option of a potentiostat is the sense lead that assists in driving the EC cell. The shunt resistor has a disadvantage for high-current applications, since it has an essential voltage drop across it. To resolve the problem of uncompensated voltage drop on the resistance of the WE connecting wire, Rwire, and the shunt, Rshunt, (Fig. 3 a), a positive feedback line is added to the circuit to increase the polarization voltage by the amount of the corresponding loss (Fig. 10 a). Moreover, this additional feedback compensation is also relevant for TIA-based potentiostats, since the resistance of the WE connection wire, Rwire, can be effectively compensated (Fig. 10 b). Thus, it is a useful solution for high-current measurements but is less relevant for low-current measurements. Therefore, many designs don't have this option, but PalmSens uses the Sense lead in all models that can supply 100 mA current or more. Also sense electrode is used in MYSTAT potentiostat [13].

When the Sense lead is connected as close as possible to the WE, most of the voltage drop on the connection wire of the working electrode is compensated. Since VF2 has a low input current, its connection is free from voltage drop, so it amplifies the error voltage and feeds it into the positive feedback of the CA and compensates for the corresponding voltage drop between the sense electrode connection and the ground bus.

### 9.4. Filters

To fully understand modern digital potentiostats, one must be aware of the need to ensure signal integrity in the system [55,56]. Therefore, the use of appropriate filters is desirable for the proper potentiostat functioning. The idea of the filter is to change the frequency distribution of the signal, separating useful frequency regions and suppressing others. The filters in the potentiostat circuit have two main tasks: reducing the signal bandwidth and signals separation. One group of filters is the anti-aliasing and anti-imaging filters, and another group of filters controls the potentiostat operation bandwidth.

The problem is that signal spectra often overlap with noise. The aim of the engineers is to find the optimal filter characteristics to suppress noises and to avoid significant distortions of the informative signal. By limiting the bandwidth of the observed signal in a specific region, the signal-to-noise ratio of the measurements is improved. On the other hand, a significant bandwidth limitation can reshape the signal. If analytical techniques based on the graduation procedure are insensitive to the signal shape then the noise-to-signal ratio is important. Extraction of fundamental characteristics, for example, amplitudes and positions of peaks, half-wave potentials, can be corrupted by filtered data. The solution to this problem is to determine the filter response and to subsequently deconvolve the signal to restore its original waveform [57,58].

The advantage of filtering is improved signal-to-noise ratio. At the same time the disadvantage of filtering is the loss of part of the information in the suppression region of the filter. So, filters are applied as needed, for versatile commercial devices the bandwidth can be adjustable to the task required. For the application of appropriate filters, proper identification of noise sources is crucial. In some cases it is more efficient is to prevent noise penetration into the system. The use of Faraday cage and shielding are the main techniques for this. [59,60].

There are three different places of the potentiostat where bandpass filtration is gainful: i) the connection branch between the VF and the CA, ii) the CA stage, and iii) the TIA stage (current measurement unit in the general case). Let's discuss each of them.

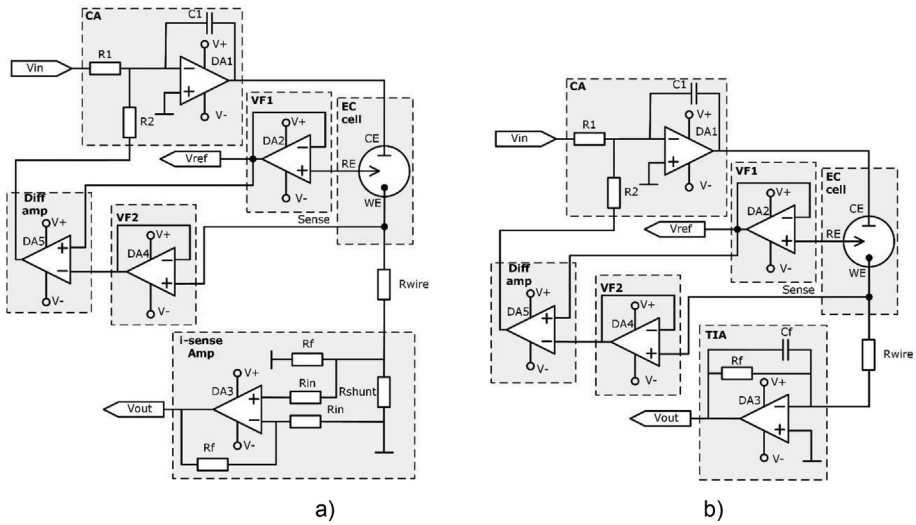


**Fig. 10.** Potentiostat with sense electrode.

Fast polarization of the EC cell can initiate oscillations in the potentiostat if the phase margin between the CA and VF stages is too small or negative, and a negative feedback loop is transformed into a positive one. Thus, a limitation of the excitation signal spectrum (signal filtering before the CA stage) and/or CA op-amp correction have to be done. The op-amp shouldn't be free of the negative feedback in the whole frequency range, otherwise there is a probability of saturation, generation, and oscillation of the circuit. The bandwidth limitation of the op-amp in the CA stage is often realized by a C or RC element in the feedback between the CA output and its inverting input for proper correction of the frequency response of this stage, depending on the VF loop capabilities (for example, C1 in Fig. 1).

The VF branch organises the negative feedback loop of the CA. Additional filtering can be implemented between the VF and the CA. A low-pass (LP) filter, which reduces the rate of the CA response to the signal from the reference electrode, increases the stability of the potentiostat, as discussed above, and requires corresponding CA correction, but reduces the feedback bandwidth. Therefore, support for the fast polarization techniques will be lost. A high input impedance VF connected to a high impedance reference electrode is extremely sensitive to electromagnetic interference (EMI) from other electronics and the power grid. Implementation of a 50/60 Hz notch filter is helpful in this place. The earlier the filter is implemented in the circuit (closer to the source of interference), the more effective it is. Therefore, a notch filter is very useful between the VF and the CA to eliminate EMI if the EC cell shielding is ineffective or inapplicable.

The current measurement with a resistive shunt can be also bandwidth limited. In the case of a shunt measurement, frequency correction of the op-amp can be applied in the form of input RC circuits before the differential amplifier and/or as an additional output filter. The TIA feedback loop is augmented by a capacitor. It appears for various reasons as a parasitic capacitance of electronic parts and PCB, as a small capacitor for op-amp correction, or as an integrator and works as a first order LP filter. The current measurement stage bandwidth determines the potentiostat bandwidth and should match the CA stage bandwidth. The reason for increasing the TIA (or current measurement stage) bandwidth should be consistent with the fast polarization capability in the CA stage. If the TIA is limited in its bandwidth, then the reason for fast polarization of the EC cell is also irrelevant.

Another group of filters is associated with the digital nature of modern devices. The use of digital instrumentation like DAC and ADC in measurements requires anti-imaging and anti-aliasing filters, respectively [55]. The critical points are ADC input and DAC output respectively, so here we can often see passive and active filters. The problem of passive filters is too low order of the synthesised filter for practical use, while high-order active filters require many additional electronic parts in the circuits and increase the cost of the potentiostat. High resolution measurements require better suppression parameters of filters.

A low pass-filter is most applicable for these purposes, since the frequency range of electrochemical processes starts from static processes. The formal requirements to the anti-aliasing and anti-imaging filters are the same, so possible solution is a simplified design implementing only one anti-aliasing or anti-imaging filter [7,9–11] or a design with different input and output filters [8,13–15,17,18]. A key filters design strategy is the determination of the quantization noise in the suppression region, which should be less than the noise in the ADC or DAC for the anti-imaging or anti-aliasing filters, correspondingly [55]. Important criteria for filter design are signal characteristics. Fast slope signals produce a higher number of high-frequency harmonics that need to be suppressed. In practical filters the passband and suppression region are separated by an intermediate region. For proper operation, the sampling rate should be within the suppression region of the filter, while the level of the suppressed signal should be appropriate, i.e. less than the quantization noise. The problem of high-resolution measurements is low quantization noise, which requires high level of suppression by the filter. Moreover, high resolution ADCs and DACs have low sampling rates. To appropriately reduce the sampling rate in the digital part, the intermediate frequency region should be reduced, which requires high quality filters, achievable only with high-order filters.

Digital signal processing can soften the requirements to analog filters but can't completely replace their use. The signal filtration in potentiostat can reduce the requirements to additional anti-imaging or anti-aliasing filters.

Accordingly, anti-imaging and anti-aliasing filters are used after the output of the DAC, that forms the polarization signal, and before the inputs of the ADC, that digitizes the signal of the current through the working electrode, and, optionally, the potentials of the counter electrode and the reference electrode. In many cases these are LP filters. Their structure and characteristics can be quite different, which depends both on the characteristics of the synthesized signals and on the EC cell parameters.

Signal filtering in potentiostats is considered taking into account the practical use and purpose, the number of filters and their order [56]. Both active [61] and passive filters [62] are used. However, in some cases, excessive oscillations in the output current–voltage dependences reflect weak solutions for signal filtration [16,20].

### 9.5. Recommendations

Thus, the following recommendations conclude the previous text. The inverting circuit of op-amp for CA, VF and TIA is a universal base for many solutions. The TIA-based potentiostat is flexible to include different additional options. Important functionalities of the universal potentiostat are CE voltage control and OCP measurement, EC cell disconnection, and iR-compensation. Desirable extra functions for the versatile potentiostat are galvanostat mode, support of EIS techniques, fourth sensing electrode.

Modern galvanostats/potentiostats use similar electronic units, so, usually, a few reconnections are enough to change the operation mode of the device.

So, we have a rather rough approximation that 1 V/s scan rate requires 10…100 Hz bandwidth and ask 100 ~ 1000 sample/s sampling rate. The exact relation depends on the characteristics of the excitation signal, the signal filtering and the type of digitizing process. There are two critical points for signal processing: implementation of the anti-aliasing and anti-imaging filters at the input and output of the potentiostat. Design of these filters should take into account the frequency correction and filtration realized in the functional units of the potentiostat, as discussed above.

## 10. Conclusion

The article describes the principles of the potentiostat schematic and analyses its different modifications. Analyses of new solutions showed the applicability of general concepts with new electronic parts. Portable devices have simplified schematics with reduced functionality or capabilities. Analysis of different schematics and requirements for op-amps in different stages makes it possible to choose an appropriate similar op-amp for all stages of potentiostat/galvanostat, therefore double- and quad-amplifier ICs can be used for device miniaturization and cost reduction. An inverting operational amplifier circuit, a voltage follower, and a TIA are the three principal units of most potentiostats. The reason for replacing the TIA with the shunt resistor circuit is to support high-current application. The sensing lead of the potentiostat is required for the same reason. Signal processing that includes filtering is necessary to construct a proper potentiostat. It is unlikely to observe high quality signal filtration in low-cost devices, on the other hand, a proper filter is crucial for the signal integrity in the measurement system.

Sufficient progress in power management ICs reduces the actuality of unipolar power supply since bipolar powering is more versatile. At the same time, the voltage reduction for power sources decreases overall power consumption and allows using modern low-voltage electronic parts. Moreover, the essential functions for potentiostat unit operation and corresponding limitations were discussed. Extension of functionality requires a corresponding expansion of the materials bill for the potentiostat. Data acquisition of current changes during the polarization program is principal for potentiostat operation, but the extension of the number of data acquisition channels is useful for the reliability of the potentiostat operation.

## Consideration

Authors congratulate Prof. Erkang Wang on the Anniversary and wish him a magnificent celebration and fruitful and happy future years. The authors are highly pleased to have the unique chance to know him face-to-face. The sparks of scientific interest in his eyes fire our hearts for R&D activity.

## CRediT authorship contribution statement

**Dmytro Snizhko:** Conceptualization, Data curation, Project administration, Writing – original draft, Writing – review & editing. **Yuriy Zholudov:** Conceptualization, Data curation, Writing – review & editing. **Anatoliy Kukoba:** Methodology, Funding acquisition, Visualization. **Guobao Xu:** Supervision, Writing – review & editing, Project administration.

## Data availability

No data was used for the research described in the article.

## Declaration of Competing Interest

The authors declare that they have no known competing financial interests or personal relationships that could have appeared to influence the work reported in this paper.

## Acknowledgements

This work was kindly supported by the National Natural Science Foundation of China (No. 22174136 and 21874126), the Ministry of Education and Science of Ukraine (0122U001533), National Research Foundation of Ukraine (2020.02/0390), the Ministry of Science and Technology of the People's Republic of China (CU03-02), the Chinese Academy of Sciences President's International Fellowship Initiative (PIFI).

## References

[1] J. Barek, J. Zima, Eighty years of polarography – history and future, Electroanalysis 15 (5–6) (2003) 467–472, https://doi.org/10.1002/elan.200390055.
[2] Sensit Smart. Smartphone potentiostat. https://www.palmsens.com/product/sensit-smart/.
[3] PalmSens4. Compact, versatile and powerful. https://www.palmsens.com/product/palmsens4/.
[4] μStat-i 400 Bipotentiostat/Galvanostat/Impedance Analyzer (EIS) https://www.metrohm.com/en/products/s/tat-/stat-i-400.html.
[5] Portable potentiostat CS100E (with EIS) https://www.corrtestinstruments.com/en/extendedseries/1396.html.
[6] Electrochemical Analyzer-Simulator (Simulator of chemical sensor, Potentiostat) ECAS100https://www.zensorrd.com/ECAS100.html.
[7] A. Ainla, M.P.S. Mousavi, M.-N. Tsaloglou, J. Redston, J.G. Bell, M.T. Fernández-Abedul, G.M. Whitesides, Open-source potentiostat for wireless electrochemical detection with smartphones, Anal. Chem. 90 (10) (2018) 6240–6246, https://doi.org/10.1021/acs.analchem.8b00850.
[8] M.D.M. Dryden, A.R. Wheeler, DStat: a versatile, open-source potentiostat for electroanalysis and integration, PLoS One 10 (10) (2015) e0140349.
[9] A.A. Rowe, A.J. Bonham, R.J. White, M.P. Zimmer, R.J. Yadgar, T.M. Hobza, J.W. Honea, I. Ben-Yaacov, K.W. Plaxco, CheapStat: an open-source, "do-it-yourself" potentiostat for analytical and educational applications, PLoS One 6 (9) (2011) e23783.
[10] A. Scott, R. Pandey, S. Saxena, E. Osman, Y. Li, L. Soleymani, A smartphone operated electrochemical reader and actuator that streamlines the operation of electrochemical biosensors, ECS Sensors Plus 1 (1) (2022), https://doi.org/10.1149/2754-2726/ac5fb3 014601.
[11] M.W. Glasscott, M.D. Verber, J.R. Hall, A.D. Pendergast, C.J. McKinney, J.E. Dick, SweepStat: a build-it-yourself, two-electrode potentiostat for macroelectrode and ultramicroelectrode studies, J. Chem. Educ. 97 (1) (2019) 265–270, https://doi.org/10.1021/acs.jchemed.9b00893.
[12] O.S. Hoilett, J.F. Walker, B.M. Balash, N.J. Jaras, S. Boppana, J.C. Linnes, KickStat: a coin-sized potentiostat for high-resolution electrochemical analysis, Sensors 20 (8) (2020) 2407, https://doi.org/10.3390/s20082407.
[13] P. Irving, R. Cecil, M.Z. Yates, MYSTAT: a compact potentiostat/galvanostat for general electrochemistry measurements, HardwareX 9 (2021) e00163.
[14] T. Dobbelaere, P.M. Vereecken, C. Detavernier, A USB-controlled potentiostat/galvanostat for thin-film battery characterization, HardwareX 2 (2017) 34–49, https://doi.org/10.1016/j.ohx.2017.08.001.
[15] D.M. Jenkins, B.E. Lee, S. Jun, J. Reyes-De-Corcuera, E.S. McLamore, ABE-Stat, a fully open-source and versatile wireless potentiostat project including electrochemical impedance spectroscopy, J. Electrochem. Society 166 (9) (2019) B3056–B3065, https://doi.org/10.1149/2.0061909jes.
[16] P. Lopin, K.V. Lopin, PSoC-Stat: A single chip open source potentiostat based on a Programmable System on a Chip, PLoS One 13 (7) (2018) e0201353.
[17] S. Sarkar, M. Bhattacharya, 2020. SStat: Wi-Fi and Bluetooth integrated Multimodal "Do-It-Yourself" Electrochemical Potentiostat. IECON 2020 The 46th Annual Conference of the IEEE Industrial Electronics Society. doi: 10.1109/iecon43393.2020.9254701.
[18] IO Rodeo Inc., Rodeostat. https://iorodeo.com/products/potentiostat-shield.

[19] M. Caux, A. Achit, K. Var, G. Boitel-Aullen, D. Rose, A. Aubouy, S. Argentieri, R. Campagnolo, E. Maisonhaute, PassStat, a simple but fast, precise and versatile open source potentiostat, HardwareX 11 (2022) e00290.
[20] T. Arevalo-Ramirez, C.C. Torres, A. Cela Rosero, P. Espinoza-Montero, 2016. Low cost potentiostat: Criteria and considerations for its design and construction. 2016 IEEE ANDESCON. doi: 10.1109/andescon.2016.7836211.
[21] K.A.A. Mamun, N. McFarlane, 2015. A CMOS potentiostatic glucose monitoring system for VACNF amperometric biosensors. 2015 IEEE International Symposium on Circuits and Systems (ISCAS). doi: 10.1109/iscas.2015.7168674.
[22] S. Abdullah, S. Tonello, M. Borghetti, E. Sardini, M. Serpelloni, Potentiostats for protein biosensing: design considerations and analysis on measurement characteristics, J. Sensors 2019 (2019) 1–20, https://doi.org/10.1155/2019/6729329.
[23] S. Abdullah, M. Serpelloni, E. Sardini, Design of multichannel potentiostat for remote and longtime monitoring of glucose concentration during yeast fermentation, Rev. Sci. Instrum. 91 (5) (2020), https://doi.org/10.1063/1.5137789 054104.
[24] F.A. Musa, O.O. Ajide, N. Idusuyi, A.A. Adebayo, B.P. Odunaro, O.P. Obasi, O.O. Oluwole, K.M. Oluwasegun, N. Kumar, A.S. Adebayo, Development and performance evaluation of a mini-potentiostat for corrosion experimentations, J. Eng. Res. Reports (2022) 39–45, https://doi.org/10.9734/jerr/2022/v22i717548.
[25] S.N.H. Umar, E.A. Bakar, N.M. Kamaruddin, N. Uchiyama, A low cost potentiostat device for monitoring aqueous solution, MATEC Web of Conferences 217 (2018) 04001, https://doi.org/10.1051/matecconf/201821704001.
[26] Y. Matsubara, A small yet complete framework for a potentiostat, galvanostat, and electrochemical impedance spectrometer, J. Chem. Educ. 98 (10) (2021) 3362–3370, https://doi.org/10.1021/acs.jchemed.1c00228.
[27] M.M. Ahmadi, G.A. Jullien, Current-mirror-based potentiostats for three-electrode amperometric electrochemical sensors, IEEE Trans. Circuits Syst. I Regul. Pap. 56 (7) (2009) 1339–1348, https://doi.org/10.1109/tcsi.2008.2005927.
[28] C. Min, L. Yuntao, X. Jingbo, C. Jie, A CMOS detection chip for amperometric sensors with chopper stabilized incremental ΔΣ ADC, J. Semicond. 37 (6) (2016), https://doi.org/10.1088/1674-4926/37/6/065004 065004.
[29] J. Aznar-Poveda, J. Lopez-Pastor, A.-J. Garcia-Sanchez, J. Garcia-Haro, T. Otero, A COTS-based portable system to conduct accurate substance concentration measurements, Sensors 18 (2) (2018) 539, https://doi.org/10.3390/s18020539.
[30] A.R. Baranwal, S. Dudala, P. Rewatkar, J.M. Mohan, M. Salve, S. Goel, Development of completely automated poly potential portable potentiostat, ECS J. Solid State Sci. Technol. 10 (2) (2021), https://doi.org/10.1149/2162-8777/abdc15 027001.
[31] S.-C.-H. Lee, P.J. Burke, NanoStat: an open source, fully wireless potentiostat, Electrochim. Acta 422 (2022), https://doi.org/10.1016/j.electacta.2022.140481 140481.
[32] A. Hickling, 1942. Studies in electrode polarisation. Part IV.—The automatic control of the potential of a working electrode. Trans. Faraday Soc., 38(0), 27–33. doi: 10.1039/tf9423800027.
[33] A.J. Bard, L.R. Faulkner, Chap. 15 Electrochemical instrumentation, in: A. J. Bard & L.R. Faulkner, Electrochemical Methods: Fundamentals and Applications, John Wiley & Sons, Inc., New York, 2000, 632-658. ISBN: 9780471043720.
[34] D. Wipf, Chap. 1.2 Analog and Digital Instrumentation, in: Vol.3, Instrumentation and Electroanalytical Chemistry, A.J. Bard, M. Stratmann, P. R. Unwin (Eds.), Wiley, New York, 2003, p. 24-50. ISBN: 9783527303953 doi: 10.1002/9783527610426.bard030102.
[35] Tutorial. Op Amp Common-Mode Rejection Ratio (CMRR). MT-042, Analog Devices. https://www.analog.com/media/en/training-seminars/tutorials/MT-042.pdf.
[36] Operational Amplifiers. (1993). Edt. by: Jiri Dostal doi: 10.1016/c2009-0-26728-6.
[37] C. Amatore, E. Maisonhaute, G. Simonneau, Ultrafast cyclic voltammetry: performing in the few megavolts per second range without ohmic drop, Electrochem. Commun. 2 (2) (2000) 81–84, https://doi.org/10.1016/s1388-2481(99)00150-2.
[38] C. Amatore, E. Maisonhaute, G. Simonneau, Ohmic drop compensation in cyclic voltammetry at scan rates in the megavolt per second range: access to nanometric diffusion layers via transient electrochemistry, J. Electroanal. Chem. 486 (2) (2000) 141–155, https://doi.org/10.1016/s0022-0728(00)00131-5.
[39] D. Snizhko, A. Kukoba, Ultrafast potentiostat as compromise between current sensitivity vs. response time, Przegląd Elektrotechniczny 1 (8) (2019) 104–109, https://doi.org/10.15199/48.2019.08.24.
[40] R.M. Wightman, D.O. Wipf, High-speed cyclic voltammetry, Acc. Chem. Res. 23 (3) (1990) 64–70, https://doi.org/10.1021/ar00171a002.
[41] M. Lohrengel, iR-Drop elimination, in: G. Kreysa, K.i. Ota, R.F. Savinell (Eds.), Encyclopedia of Applied Electrochemistry, Springer, New York, NY, 2014, https://doi.org/10.1007/978-1-4419-6996-5_226.
[42] J.-Q. Chen, X.-X. Ye, L.-W. Liao, Z. Wei, M.-L. Xu, Y.-X. Chen, Ohmic drop compensation in electrochemical measurement, J. Electrochem. 27 (3) (2021) 291–300, https://doi.org/10.13208/j.electrochem.201257.
[43] Y. Bao, F.-Y. Yuan, X. Zhang, G.-F. Yang, X.-Y. Liu, W. Wang, L. Niu, Automatic Measurement and Compensation of Solution Resistance for Electrochemical Measurements, Chin. J. Anal. Chem. 39 (6) (2011) 939–942. http://www.analchem.cn/article/id/390.
[44] J.D.E. McIntyre, W.F. Peck, An interrupter technique for measuring the uncompensated resistance of electrode reactions under potentiostatic control, J. Electrochem. Soc. 117 (6) (1970) 747, https://doi.org/10.1149/1.2407622.
[45] R. Bezman, Sampled-data approach to the reduction of uncompensated resistance effects in potentiostatic experiments, Anal. Chem. 44 (11) (1972) 1781–1785, https://doi.org/10.1021/ac60319a002.
[46] Application note. Rev. 3.0 1/16/2018. Understanding iR Compensation. Gamry instruments. https://www.gamry.com/application-notes/instrumentation/understanding-ir-compensation/.
[47] H. Yamagishi, Automatic compensation of the IR drop in three-electrode systems by use of an electronic unit, J. Electroanal. Chem. 326 (1–2) (1992) 129–137, https://doi.org/10.1016/0022-0728(92)80508-2.
[48] G.S. Popkirov, A technique for series resistance measurement and ohmic drop correction under potentiostatic control, J. Electroanal. Chem. 359 (1–2) (1993) 97–103, https://doi.org/10.1016/0022-0728(93)80402-4.
[49] C. Yarnitzky, Y. Friedman, Dynamic compensation of the over all and uncompensated cell resistance in a two- or three-electrode system. Steady state techniques, Anal. Chem. 47 (1975) 876–880, https://doi.org/10.1021/AC60356A030.
[50] C. Yarnitzky, N. Klein, Dynamic compensation of the “over all” and “uncompensated” cell resistance in a two- or three-electrode system-transient techniques, Anal. Chem. 47 (6) (1975) 880–884.
[51] R.L. Deutscher, S. Fletcher, J.A. Hamilton, Invention of cyclic resistometry, Electrochim. Acta 31 (5) (1986) 585–589, https://doi.org/10.1016/0013-4686(86)85037-x.
[52] D.O. Wipf, Ohmic drop compensation in voltammetry: iterative correction of the applied potential, Anal. Chem. 68 (11) (1996) 1871–1876, https://doi.org/10.1021/ac951209b.
[53] L. Busoni, M. Carla, L. Lanzi, A comparison between potentiostatic circuits with grounded work or auxiliary electrode, Rev. Sci. Instrum. 73 (4) (2002) 1921–1923, https://doi.org/10.1063/1.1463715.
[54] White Paper. (Un)Grounded: Grounded and floating measurements and their application in electrochemical research. WP-069EN – 2021-06, Metrohm AG. https://www.metrohm.com/en/applications/whitepaper/wp-069.html.
[55] E.C. Ifeachor, B.W. Jervis, Digital Signal Processing: A Practical Approach, 2nd ed., Prentice Hall, 2001.
[56] A.B. Williams, F.J. Taylor, 2010. Electronic filter design handbook (4th ed.). McGraw-Hill. ISBN: 978-0-07-149130-3.
[57] D.O. Wipf, R.M. Wightman, Submicrosecond measurements with cyclic voltammetry, Anal. Chem. 60 (22) (1988) 2460–2464, https://doi.org/10.1021/ac00173a005.
[58] A.S. Baranski, W. Lu, Deconvolution of voltammetric measurements from the slow response of current transducers, J. Electroanal. Chem. Interfacial Electrochem. 260 (1) (1989) 1–13, https://doi.org/10.1016/0022-0728(89)87094-9.
[59] M.W. Glasscott, E.W. Brown, K. Dorsey, C.H. Laber, K. Conley, J.D. Ray, L.C. Moores, A. Netchaev, Selecting an optimal faraday cage to minimize noise in electrochemical experiments, Anal. Chem. 94 (35) (2022) 11983–11989, https://doi.org/10.1021/acs.analchem.2c02347.
[60] A.W. Colburn, K.J. Levey, D. O’Hare, J.V. Macpherson, Lifting the lid on the potentiostat: a beginner’s guide to understanding electrochemical circuitry and practical operation, PCCP 23 (14) (2021) 8100–8117, https://doi.org/10.1039/d1cp00661d.
[61] G.S. Moschytz, P. Horn, Active Filter Design Handbook, John Wiley & Sons, Chichester, England, 1981. ISBN: 0471278505.
[62] H.G. Dimopoulos, 2012. Synthesis and Design of Passive Filters. Analog Electronic Filters, 249–313. doi: 10.1007/978-94-007-2190-6_7