ResearchGate

See discussions, stats, and author profiles for this publication at: https://www.researchgate.net/publication/224096601

A Redox-Enzyme-Based Electrochemical Biosensor with a CMOS Integrated Bipotentiostat

Conference Paper · December 2009

DOI: 10.1109/BIOCAS.2009.5372093 · Source: IEEE Xplore

CITATIONS
10

READS
940

2 authors, including:

Yue Huang
Michigan State University

20 PUBLICATIONS **758** CITATIONS

SEE PROFILE

All content following this page was uploaded by Yue Huang on 28 December 2015.

The user has requested enhancement of the downloaded file.

A Redox-Enzyme-Based Electrochemical Biosensor with a CMOS Integrated Bipotentiostat

Yue Huang and Andrew J. Mason
Electrical and Computer Engineering, Michigan State University,
East Lansing, Michigan, USA,
huangyu3@msu.edu

***Abstract*— This paper presents an electrochemical biosensor featuring redox enzymes and a supporting CMOS bipotentiostat. The bipotentiostat architecture supports redox recycling through a common potential control unit and two readout channels where excitation signals can be inserted. The readout channel was characterized to have a dynamic range from 1 nA to 10 µA. A fructose sensor was created on a microfabricated interdigitated electrode array as an example redox-enzyme-based biosensor. Cyclic voltammogram measurements show a 27% increase in electrochemically magnified current due to redox recycling while measuring 200 mM fructose. Chronoamperometry experiments using the CMOS bipotentiostat agree well with a commercial bipotentiostat for fructose concentration from 50 mM to 400 mM.**

I. Introduction

Electrochemical biosensors have been successfully applied in many biomedical applications. A DNA array was integrated on a CMOS chip [1], demonstrating the vast opportunity to combine electronics with electrochemical biosensors. Enzyme-based biosensors have superior specificity, sensitivity and variety in their catalyzing reactions with biomolecules and are widely used for clinical testing. Redox enzyme, known as *Oxidoreductases*, is a species of enzyme heavily involved in metabolism, for example glucose oxidase. When combined with CMOS electrochemical instrumentation circuits, redox-enzyme-based electrochemical biosensors will advance the miniaturization of medical point-of-care instruments and implantable devices for continuous clinical monitoring of fructose, glucose, alcohol, pyruvate, cholesterol and other medically significant biomolecules.

Redox enzymes catalyze oxidation or reduction reactions with direct electron transfer, making it highly suitable for electrochemical sensors that provide continuous real-time monitoring of the target biomolecules. However, some redox enzymes have very small turnover rates, resulting in low biosensor sensitivity and low current levels when miniaturized. The redox recycling effect can be utilized to electrochemically magnify the faradic current using, for example, an interdigitated electrode array (IDA) with enzyme immobilized on both working electrodes (WE). To support redox recycling, a potentiostat must have simultaneous control of both WEs. In the past two decades, significant research has been devoted to CMOS integrated potentiostats, which have been applied to many applications including anodic stripping voltammetry to detect heavy metal ions [2], high density electrode arrays with low current [3], wide potential window [4], examining DNA match [1] reversible redox species [5] and others. However, a CMOS potentiostat supporting redox recycling with redox-enzyme-based biosensors has not been reported.

This paper presents a redox-enzyme-based fructose biosensor built on a microfabricated IDA and read out by a new CMOS bipotentiostat. This system provides enhanced sensitivity and demonstrates the potential to realize miniaturized biosensors based on redox enzymes.

II. Redox-Enzyme-Based Electrochemical Biosensor

An enzyme-based electrochemical biosensor can be produced by immobilizing the enzyme onto a working electrode surface. For redox enzyme, it is beneficial to immobilize the enzyme onto an IDA to take advantage of the redox recycling effect. The faradic current generated by redox recycling is due purely to increased mass transport of the redox active species of interest, thus enhancing sensitivity. Furthermore, because the current due to interfering molecules is not magnified, redox recycling improves signal to noise ratio and thus improves the biosensor limit of detection.

A. Interdigitated electrode array

An interdigitated electrode consists of a pair of interleaved finger electrodes with a narrow gap between them. To facilitate redox recycling, each electrode is held at a different potential; normally one is at the reduction potential and the other is at the oxidation potential. At the reduction electrode, a species in oxidized form will be reduced. A portion of the reduced species transports to the bulk solution, and the rest transports to the adjacent oxidation electrode. At the adjacent oxidation electrode it is converted back to its oxidized form. It then transports back to the original reduction electrode and repeats the cycle. This action is called the redox recycling effect. Compared to a single working electrode scheme, in

This work was supported by National Science Foundation (NSF) Award Number DBI-0649847.

which an active species transports in or out of the double layer, redox cycling occurs inside the overlapped diffusion shroud of adjacent electrodes, increasing local concentration and flux of the redox active species, thus generating higher faradic current.

The redox recycling rate for a given species is highly dependent on geometrical factors of the IDA, including length, width, height, gap and the number of interleaved fingers. The steady-state amplification due to redox recycling was approximated empirically by Aoki et. al. [6] as:

$$|I_{lim}| = nFDC^{*}mb\left\{0.637\ln\left[2.55\left(1+w_f/w_g\right)\right] - 0.19\left(1+w_f/w_g\right)^2\right\} \quad (1)$$

where I_{lim} is the steady-state current, nF is the number of electrons transferred per mole of analyte, D is the diffusion coefficient, C^* is the bulk concentration, m is the number of interdigitated pairs, and b, w_f and w_g are the length, width and gap, respectively. This relationship indicates that the steady-state current is approximately a linear function of the bulk concentration. With the aid of micro/nano-fabrication, IDAs can be produced with the fingers and gaps at micrometer or nanometer scale [1, 5] to increase the redox recycling rate.

B. *Redox recycling on enzyme modified IDA*

Redox recycling has been demonstrated on an unmodified IDA [5] and a DNA probe modified IDA [1]. For enzyme-catalyzed redox recycling on an IDA, both working electrodes must be modified by the enzyme. Fig. 1 illustrates enzyme catalyzed redox recycling, where the substrate in oxidized form is reduced at the enzyme active site on the reduction electrode. Meanwhile, the reduced substrate is transported to and oxidized on the oxidation electrode.

Molecular self-assembly has been used to immobilize an enzyme and form a uniform enzyme monolayer on an electrode [7]. Fig. 1 (right) illustrates this molecular self-assembly scheme for an enzyme, which is attached to a gold electrode through a linker molecule, a cofactor and an electron mediator. The linker bonds gold and other molecules together. The mediator assists in electron transfer and reduces the overpotential. The cofactor attaches to the enzyme and transfers electrons. The specificity of the biosensor is provided by the enzyme. By exchanging the enzyme, a biosensor can be functionalized to detect different biomolecules depending on the specificity of the enzyme.

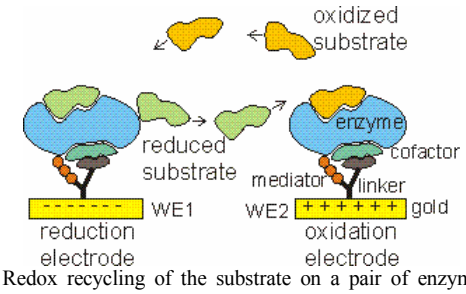

Figure 1: Redox recycling of the substrate on a pair of enzyme-modified working electrodes. The enzyme interfaces are created by molecular self-assembly.

C. *Fructose biosensor*

To demonstrate the redox-enzyme-based biosensor scheme presented here, an example fructose sensor has been implemented. Fructose plays a major role in human metabolism and is important in dietary considerations. In rare cases, intolerance to fructose can be deadly. A fructose sensor can be built utilizing mannitol dehydrogenase (MDH), a redox enzyme that reversibly converts mannitol to fructose. The catalytic reaction of D-fructose is:

$$Mannitol + NAD^{+} \overset{MDH}{\longleftrightarrow} D\text{-}Fructose + NADH + H^{+} \quad (2)$$

where NAD^+ and NADH are the oxidized and reduced forms of nicotinamide adenine dinucleotide, the cofactor of MDH. Immobilization of MDH onto a gold IDA by molecular self-assembly is presented in Section IV.

III. CMOS BIPOTENTIOSTAT

A potentiostat is the electrochemical instrument that controls the potential on a working electrode, inserts the perturbation signal, and measures the current response on the working electrode. To support redox recycling on IDAs, a bipotentiostat is required to control the potential on both WEs. As with an ordinary potentiostat, the basic circuit elements of a bipotentiostat are operational amplifiers (op-amps), which can be readily implemented as an integrated circuit using CMOS technology to miniaturize the instrumentation.

A. *CMOS Bipotentiostat architecture*

A CMOS bipotentiostat meeting the potential stimulus and current readout needs of redox-enzyme-based biosensors is shown in Fig. 2. To set one WE at an oxidation potential and the other WE at a reduction potential, an electrochemical potential reference is required. The electrochemical potential reference is provided by the reference electrode (RE), eg. a Ag/AgCl RE. The RE is a non-polarizable electrode that will keep the solid/liquid interfacing potential at a constant value even during ion concentration changes in the analyte solution. The Fig. 2 potential control block allows the analog reference voltage to be set between V_{dd} and ground through E_{bias} to match voltage swing to the desired electrochemical potential window. An adder structure is utilized to adjust for any offsets due to the op-amps or solution resistant (iR-drop) through the

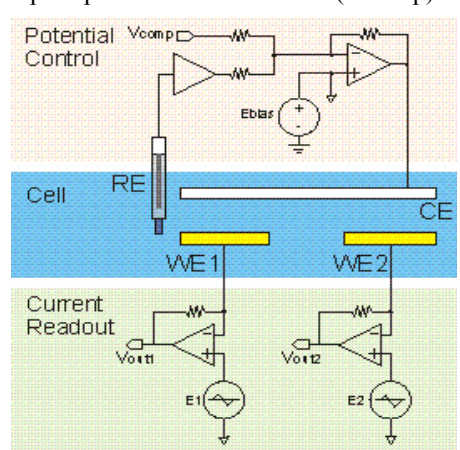

Figure 2: Architecture of the CMOS bipotentiostat with connected counter electrode (CE), reference electrode (RE), and working electrodes (WE).

Vcomp input.

Several different circuit structures have been realized to introduce perturbation signals in bipotentiostats [1, 5, 8]. Our approach offers the functional capability of these designs while minimizing circuit complexity. The current readout block in Fig. 2 shows the perturbation signals E1 and E2 are used to set the potential at WE1 and WE2. E1 and E2 are both referenced to the analog ground voltage (E_{bias}). Thus, the electrochemical potential at WE1 and WE2 (verses RE) is determined by E1 and E2, respectively. E1 and E2 can be constant voltages, voltage steps, triangle waves or sinusoidal waves to permit chronoamperometry, cyclic voltammetry, impedance spectroscopy and other techniques.

The readout circuits in Fig. 2 form I-V converters that output a voltage proportional to the current on the WEs in response to the perturbation signals. While configured for chronoamperometry, the steady-state current is directly related to the concentration of analyte. The CMOS realization of the I-V converter is presented in next section.

B. Bipotentiostat circuit

Enzyme biosensors normally have a redox potential window within 1 V, so a single-ended op-amp without rail-to-rail output configuration is sufficient for a 3.3V supply voltage. The two stage amplifier shown in Fig. 3(a) was chosen for the potential control block (Fig. 2).

Enzyme biosensors generate a wide range current due to the diverse activities of enzymes. To convert the wide ranging current into voltage, a switched-capacitor charge integrator was designed. The operational transconductance amplifier (OTA) configuration in Fig. 3(b) was chosen to implement the switched-capacitor current readout block shown in Fig. 3(c). The high gain of this circuit ensures precision operation, and the rapid settling time ensures that the output settles within half a clock period [9]. The converted voltage goes through a gain amplifier, where it is then sampled and held for output. The entire readout chain utilizes correlated double sampling to reduce noise and amplifier offset.

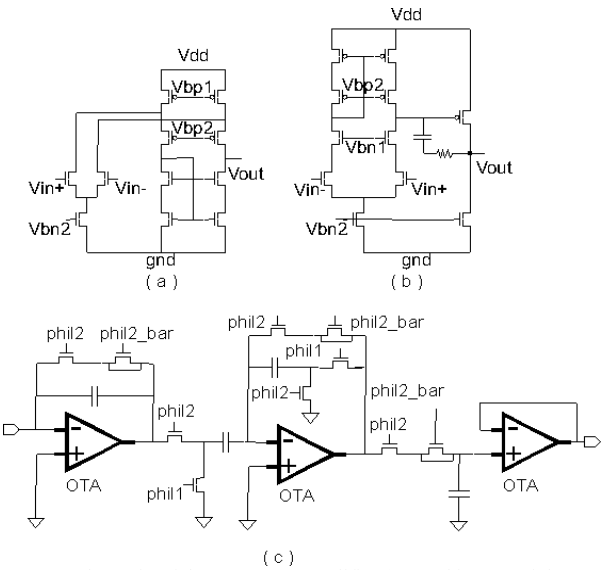

Figure 3: Schematic of the two-stage amplifier (a) used in potential control and the folded cascade OTA (b) used in the switched-capacitor current readout circuit (c).

IV. Results and Discussion

The CMOS bipotentiostat was fabricated using the AMI 0.5µm process through MOSIS. The offsets were tested and adjusted through the Vcomp input. By connecting WE1 or WE2 to a Keithley 2400 source meter, the I-V converter readout channel was characterized for subsequent measurements. Fig. 4 shows the I-V calibration curves ranging from 10 µA to 10 nA.

The example fructose biosensor was assembled on a 5 mm by 5 mm IDA fabricated on oxidized silicon using photolithography, deposition of Ti/Au and lift-off. The IDA had 5 µm wide fingers and 5 µm gaps. The MDH enzyme was immobilized on the IDAs following published procedures [7]. It was then fixed in glutaric acid for 20 minutes. The functionality of the MDH modified IDA was tested using a CHI 760 commercial bipotentiostat in the presence of 200 mM D-fructose in pH 6.0 phosphate buffer solution. A platinum counter electrode and an Ag/AgCl reference electrode were used for subsequent experiments.

A cyclic voltammetry experiment of redox recycling was conducted by sweeping the potential on WE1 while WE2 was set to 0.2V. Fig.5(a) shows the D-fructose reduction peak at 0.03V and the D-mannitol oxidation peak at about 0.2V vs. Ag/AgCl. This data established the potential range for subsequent chronoamperometry experiments. As expected, the cyclic voltammogram shows a reduction peak current under redox recycling (3.3nA) that is 27% higher than without redox recycling (2.6nA), demonstrating the enhanced sensitivity of redox recycling.

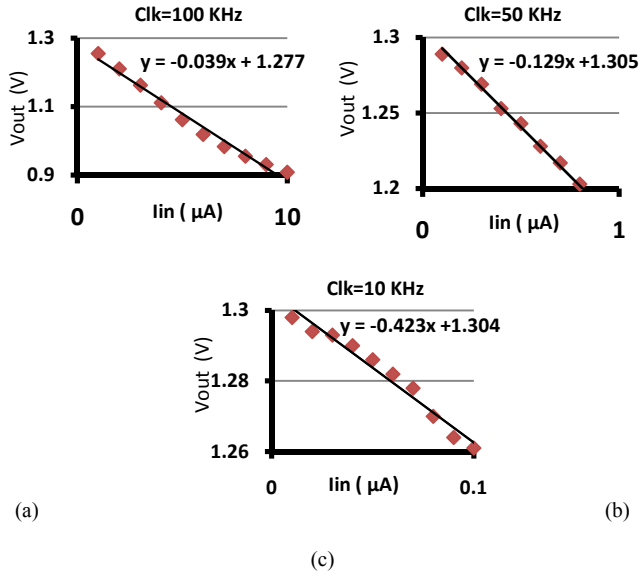

Figure 4: Readout opamp I-V conversion output at 100 KHz, 50 KHz and 10 kHz clock frequencies.

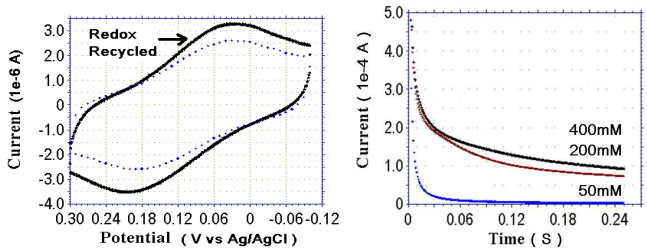

(a) (b)

Figure 5: D-Fructose sensor response on MDH modified IDA. (a) Cyclic voltammetry of 200 mM D-furctose with (solid) and without (dotted) redox recycling. (b) Chronoamperometery of 400 mM, 200 mM and 50 mM D-fructose with redox recycling.

To measure the fructose sensor, the CMOS bipotentiostat was configured by setting E_{bias} to an analog ground of $V_{dd}/2$ and E1 to -0.1V and E2 to 0.2V versus analog ground. The CMOS bipotentiostat was connected to the fructose sensor to perform chronoamperometry in 100mM, 200mM and 300mM fructose solutions. The steady-state currents were recorded at 250ms after applying the potential steps on both WE1 and WE2 synchronously. The output voltage was converted to concentration using the I-V calibration curve of the potentiostat readout circuit (Fig. 4(c)). These results are plotted in Fig. 6. For comparison, experiments were repeated using a commercial bipotentiostat in 400mM, 200mM and 50mM fructose solution to produce the results in Fig. 5(b). The steady-state values at 250ms are also shown in Fig. 6, demonstrating that our CMOS bipotentiostat shows good agreement with standard commercial instrumentation.

V. Conclusion

A CMOS bipotentiostat was structured to support redox-enzyme-based biosensors, providing simultaneous potential control over both WEs, sufficient potential window and current readout range, flexibility for perturbation inputs and offset adjustment capability. A redox-enzyme-based biosensor was shown to work seamlessly with the CMOS bipotentiostat in applying chronoamperometry to determine biomolecule concentration. A fructose sensor was created by molecular self-assemble of MDH on a microfabricated gold IDA. Interrogated in the redox recycling mode, the sensor exhibited an enhanced sensitivity. In the future, the sensitivity can be further enhanced by reducing the gap of the IDA. By interrogating the fructose sensor using the CMOS bipotentiostat, chronoamperometry experiments showed good consistency in accordance with a commercial bipotentiostat. Success with the fructose sensor suggests that, by exchanging the redox enzyme, the CMOS bipotentiostat can be used to enhance sensitivity of other redox-enzyme-based biosensors for detecting glucose, alcohol and other important biomolecules. Furthermore, the system provides miniaturization suitable for point-of-care and implantable devices.

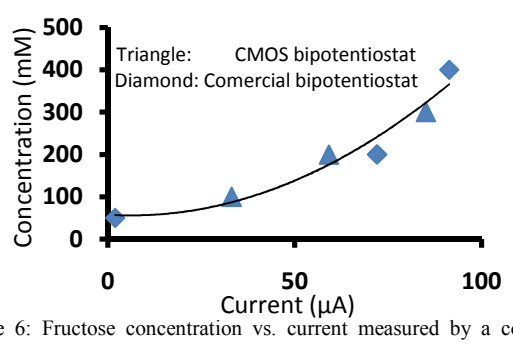

Figure 6: Fructose concentration vs. current measured by a commercial potentiostat and the CMOS bipotentiostat. Diamond marked data is from CHI 760 bipotentiostat. Triangle marked data are from the CMOS bipotentiostat.

Acknowledgment

The assistance and advice of Chao Yang, Xiaowen Liu, Yang Liu, Dr. Shantanu Chakrabartty, Neil Mascarenhas and Dr. R. Mark Worden are gratefully acknowledged. Thanks also to the MOSIS Service for fabrication support.

References

[1] A. Frey, M. Schienle, C. Paulus, Z. Jun, F. Hofmann, P. Schindler-Bauer, B. Holzapfl, M. Atzesberger, G. Beer, M. Fritz, T. Haneder, H. C. Hanke, and R. Thewes, "A digital CMOS DNA chip," in *Circuits and Systems, 2005. ISCAS 2005. IEEE International Symposium on*, 2005, pp. 2915-2918 Vol. 3.

[2] R. J. Reay, A. F. Flannery, C. W. Storment, S. P. Kounaves, and G. T. A. Kovacs, "Microfabricated electrochemical analysis system for heavy metal detection," *Sensors and Actuators B: Chemical*, vol. 34, pp. 450-455, 1996.

[3] A. Gore, S. Chakrabartty, S. Pal, and E. C. Alocilja, "A Multichannel Femtoampere-Sensitivity Potentiostat Array for Biosensing Applications," *Circuits and Systems I: Regular Papers, IEEE Transactions on [Circuits and Systems I: Fundamental Theory and Applications, IEEE Transactions on]*, vol. 53, pp. 2357-2363, 2006.

[4] S. M. Martin, F. H. Gebara, T. D. Strong, and R. B. Brown, "A low-voltage, chemical sensor interface for systems-on-chip: the fully-differential potentiostat," in *Circuits and Systems, 2004. ISCAS '04. Proceedings of the 2004 International Symposium on*, 2004, pp. IV-892-5 Vol.4.

[5] X. Zhu and C. H. Ahn, "On-Chip Electrochemical Analysis System Using Nanoelectrodes and Bioelectronic CMOS Chip," *Sensors Journal, IEEE*, vol. 6, pp. 1280-1286, 2006.

[6] K. Aoki, M. Morita, O. Niwa, and H. Tabei, "Quantitative analysis of reversible diffusion-controlled currents of redox soluble species at interdigitated array electrodes under steady-state conditions," *Journal of Electroanalytical Chemistry*, vol. 256, pp. 269-282, 1988.

[7] B. L. Hassler and R. M. Worden, "Versatile bioelectronic interfaces based on heterotrifunctional linking molecules," *Biosensors and Bioelectronics*, vol. 21, pp. 2146-2154, 2006.

[8] A. Bard and L. R. Faulkner, *Electrochemical Methods: Fundementals and Applications*. New York: Wiley, 1980.

[9] C. Yang, Y. Huang, B. L. Hassler, R. M. Worden, and A. J. Mason, "Amperometric Electrochemical Microsystem for a Miniaturized Protein Biosensor Array," *Biomedical Circuits and Systems, IEEE Transactions on*, vol. 3, pp. 160-168, 2009.

View publication stats