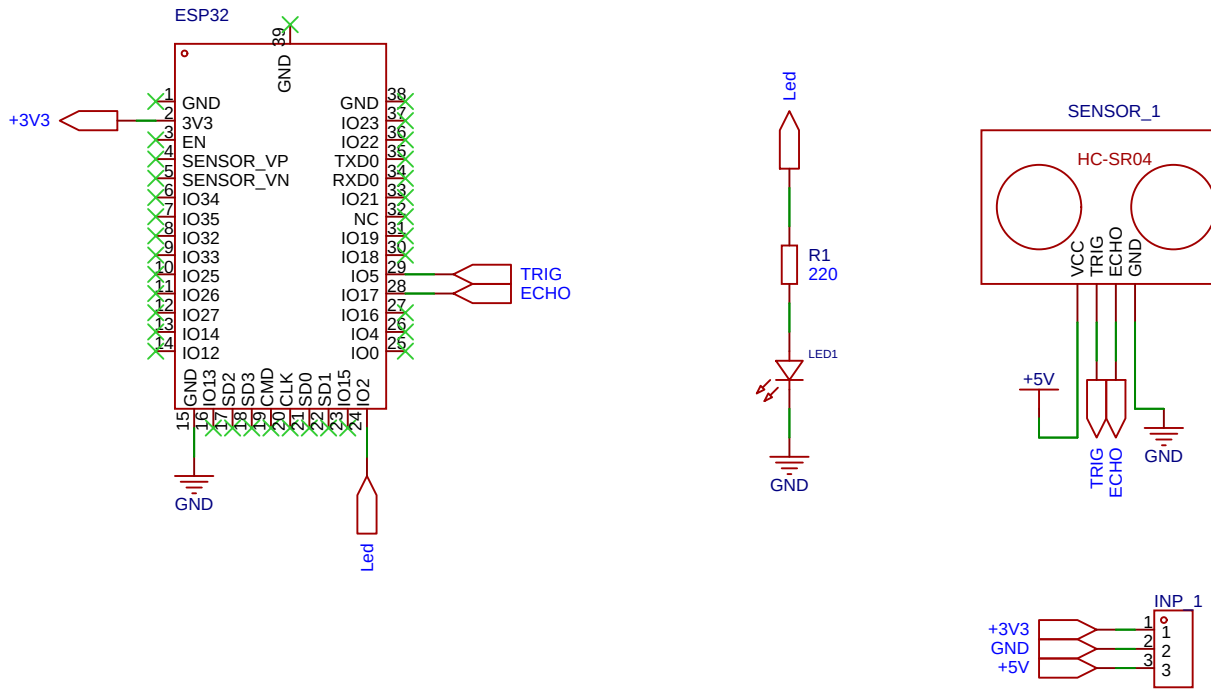

Schematic	Schematic1	Update Date	2024-03-28
		Create Date	2024-03-28
Page	P1	Part Number	Esp32
Drawn	Danilo tech	esp32_proxi_video	
Reviewed	Danilo G.		
		VER	SIZE	PAGE 1 OF 1
EasyEDA		V0.1	A4	danilo-tech.com