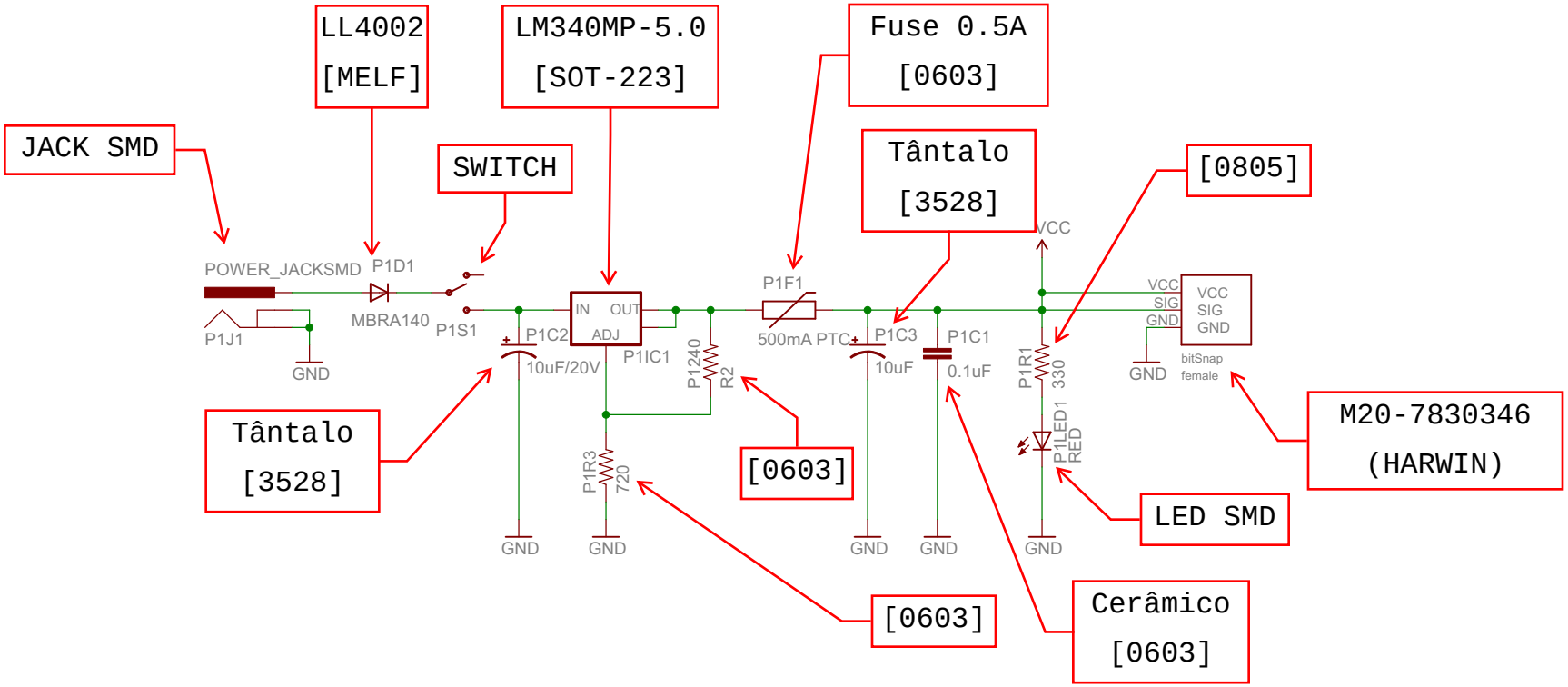

Released under the Creative Commons Attribution Share-Alike 3.0 License
http://creativecommons.org/licenses/by-sa/3.0
And Open Source Hardware (OSHW) Definition 1.0
http://freedomdefined.org/OSHW
Designed by: littleBits.cc
in collaboration with Chris Taylor from SparkFun

open hardware

TITLE: LB_BIT_p1_POWER

Document Number: REV:

Date: 1/11/2012 2:03:36 PM Sheet: 1/1