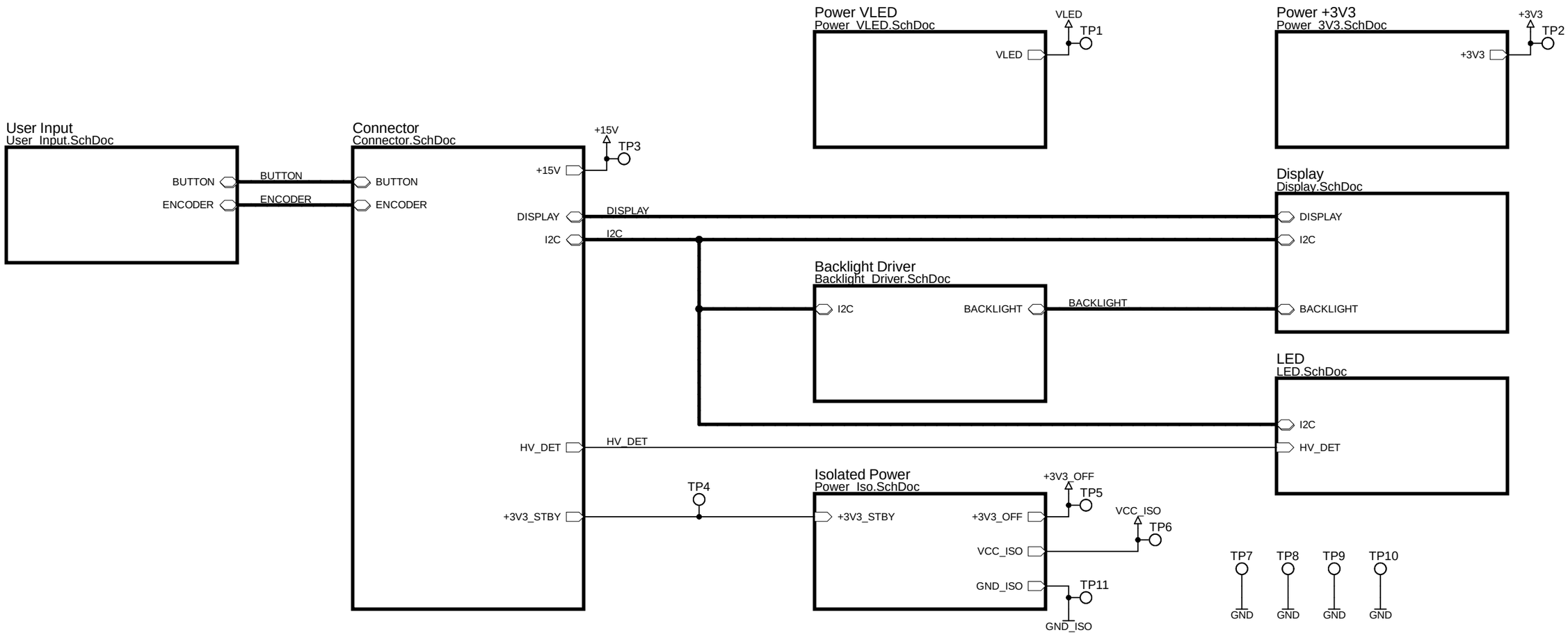

M2
SERIAL 2D

M5
QR PROJ URL

PS1-2B	M1 PCB NAME
LOGO	M4 LOGO WHE
LOGO	M6 LOGO FSG

M3
Tooling JLC

M7
Tooling JLC

FM1 FM2 FM3

FM4 FM5 FM6

Top		*
PS1-2BA	Battery Source - User Interface	*
Date: 2026-Mar-05	Sheet 1 of 9	Size: A3 *
Schema: ahorat / daniw	Layout: daniw	PS1-2-Top.SchDoc

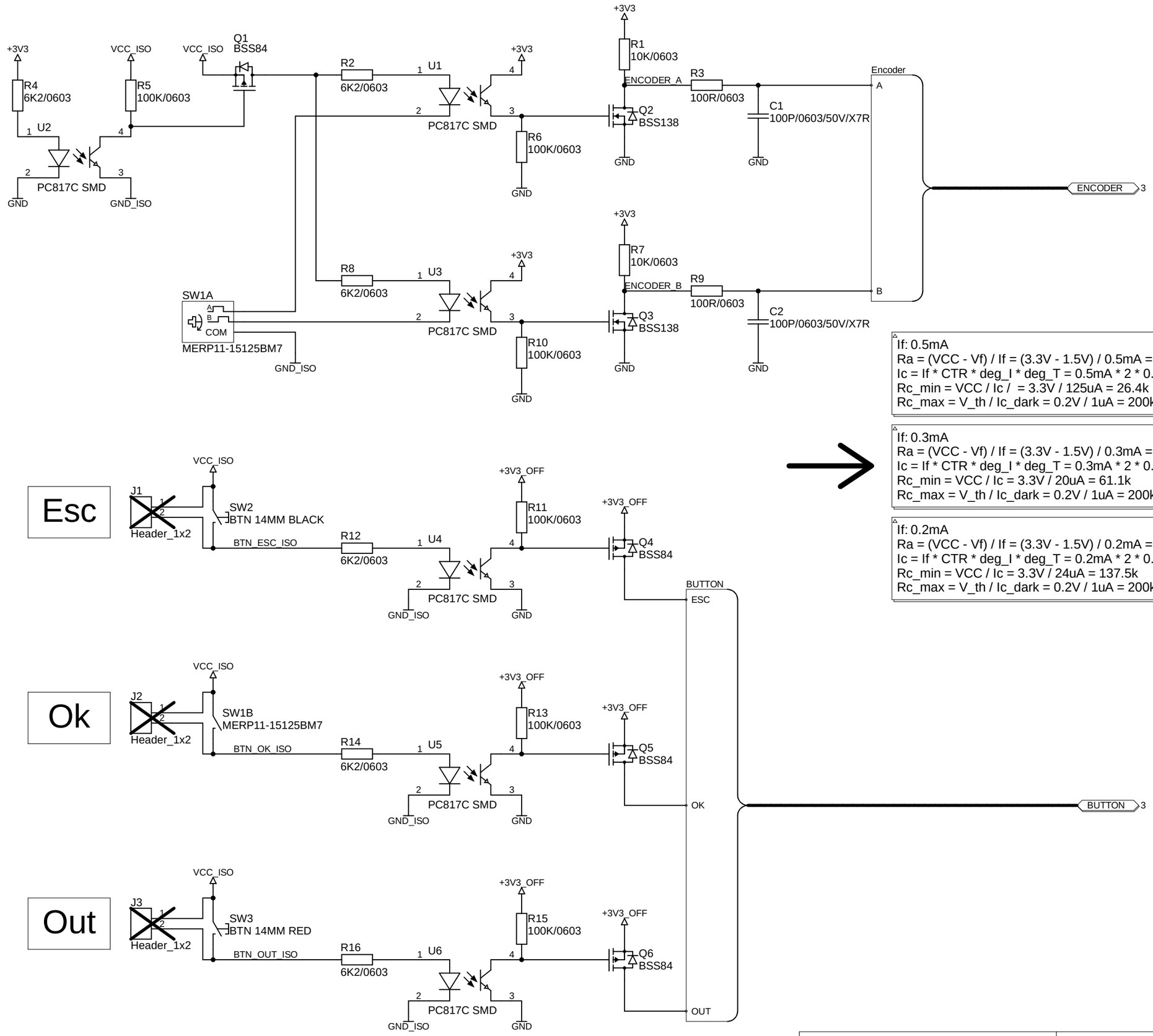

Adding additional optocouplers might be necessary due to isolation requirements for 600V CAT III (11mm)

If: 0.5mA
Ra = (VCC - Vf) / If = (3.3V - 1.5V) / 0.5mA = 3.6k
Ic = If * CTR * deg_I * deg_T = 0.5mA * 2 * 0.25 * 0.5 = 125uA
Rc_min = VCC / Ic / = 3.3V / 125uA = 26.4k
Rc_max = V_th / Ic_dark = 0.2V / 1uA = 200k

If: 0.3mA
Ra = (VCC - Vf) / If = (3.3V - 1.5V) / 0.3mA = 6k
Ic = If * CTR * deg_I * deg_T = 0.3mA * 2 * 0.18 * 0.5 = 54uA
Rc_min = VCC / Ic = 3.3V / 20uA = 61.1k
Rc_max = V_th / Ic_dark = 0.2V / 1uA = 200k

If: 0.2mA
Ra = (VCC - Vf) / If = (3.3V - 1.5V) / 0.2mA = 9k
Ic = If * CTR * deg_I * deg_T = 0.2mA * 2 * 0.12 * 0.5 = 24uA
Rc_min = VCC / Ic = 3.3V / 24uA = 137.5k
Rc_max = V_th / Ic_dark = 0.2V / 1uA = 200k

User Input		*
PS1-2BA	Battery Source - User Interface	*
Date: 2026-Mar-05	Sheet 2 of 9	Size: A3
Schema: ahorat / daniw	Layout: daniw	User_Input.SchDoc

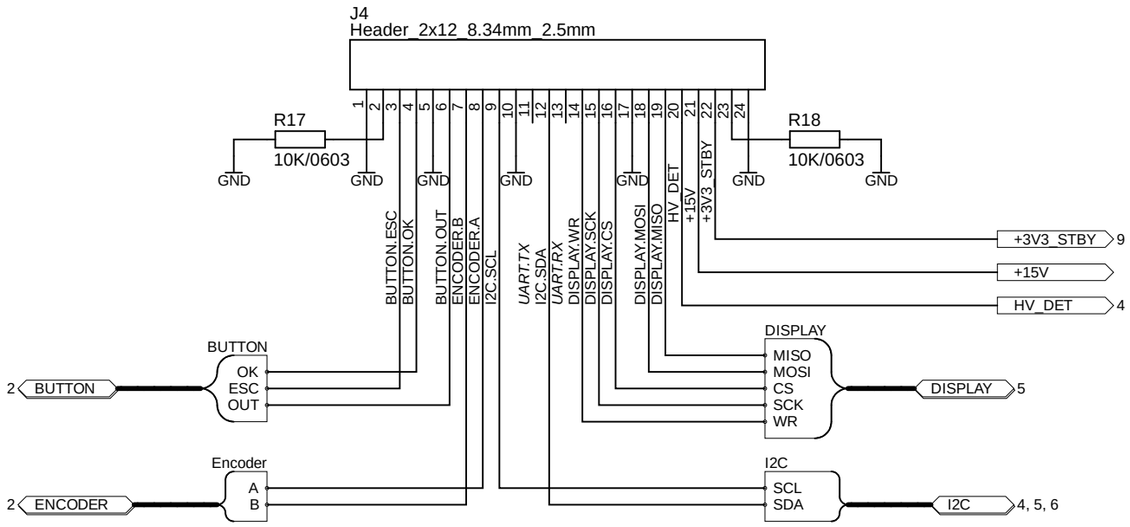

Connector		*
PS1-2BA	Battery Source - User Interface	*
Date: 2026-Mar-05	Sheet 3 of 9	Size: A3
Schema: ahorat / daniw	Layout: daniw	Connector.SchDoc

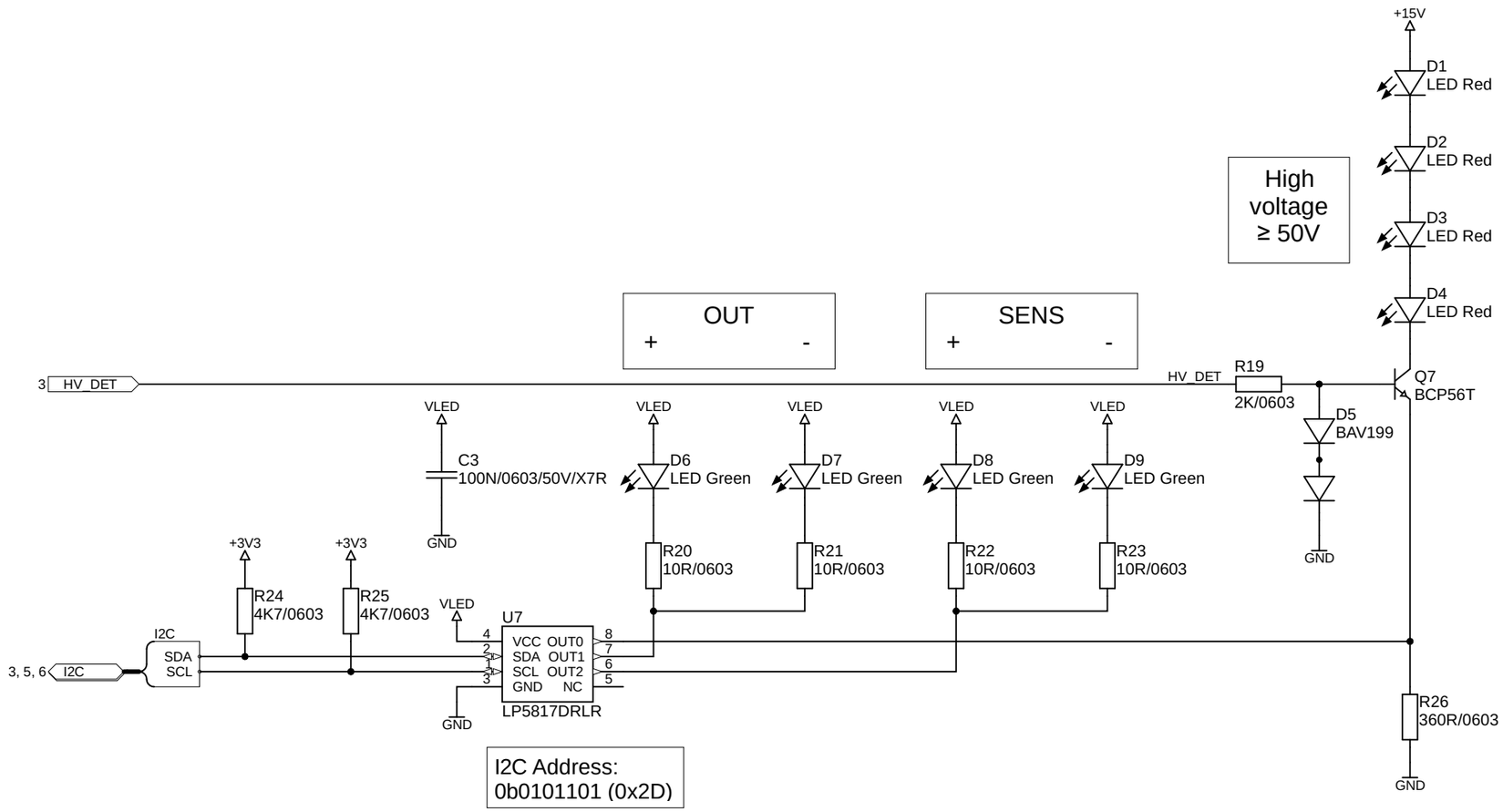

LED			* * *
PS1-2BA	Battery Source - User Interface		
Date: 2026-Mar-05	Sheet 4 of 9	Size: A3	
Schema: ahorat / daniw	Layout: daniw	LED.SchDoc	

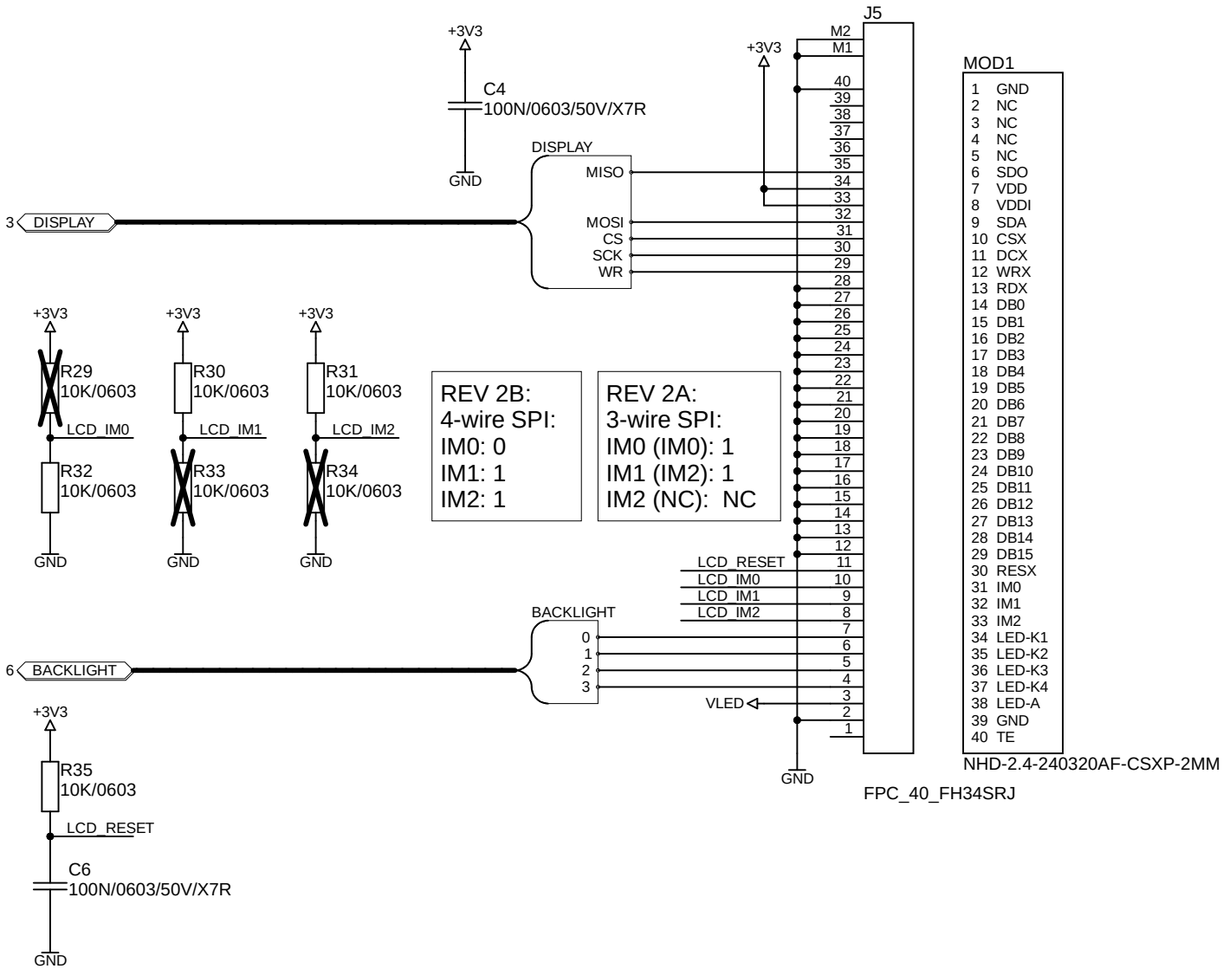

MOD1

1	GND
2	NC
3	NC
4	NC
5	NC
6	SDO
7	VDD
8	VDDI
9	SDA
10	CSX
11	DCX
12	WRX
13	RDX
14	DB0
15	DB1
16	DB2
17	DB3
18	DB4
19	DB5
20	DB6
21	DB7
22	DB8
23	DB9
24	DB10
25	DB11
26	DB12
27	DB13
28	DB14
29	DB15
30	RESX
31	IM0
32	IM1
33	IM2
34	LED-K1
35	LED-K2
36	LED-K3
37	LED-K4
38	LED-A
39	GND
40	TE

NHD-2.4-240320AF-CSXP-2MM

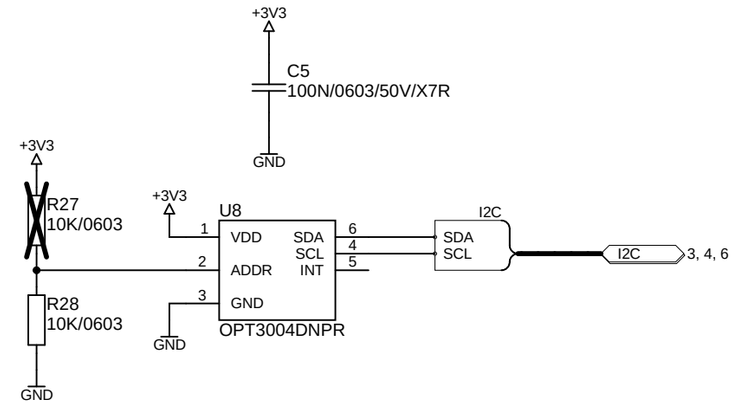

I2C Address:
0b1000100 (0x44) (ADDR = GND) <=
0b1000101 (0x45) (ADDR = VDD)
0b1000110 (0x46) (ADDR = SDA)
0b1000111 (0x47) (ADDR = SCL)

Display			* * *
PS1-2BA	Battery Source - User Interface		
Date: 2026-Mar-05	Sheet 5 of 9	Size: A3	
Schema: ahorat / daniw	Layout: daniw	Display.SchDoc	

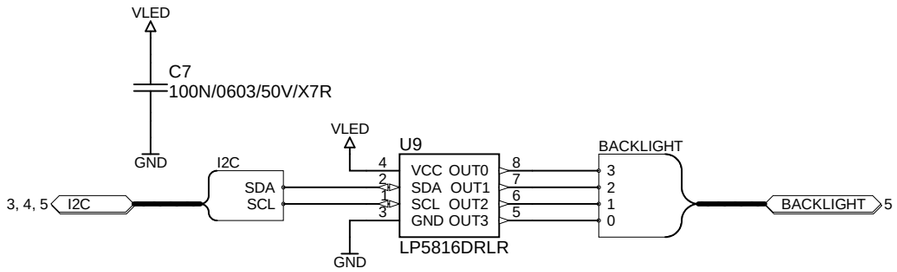

I2C Address:
0b0101100 (0x2C)

Maximum channel current: 40mA

Backlight Driver			*
PS1-2BA	Battery Source - User Interface		*
Date: 2026-Mar-05	Sheet 6 of 9	Size: A3	*
Schema: ahorat / daniw	Layout: daniw	Backlight_Driver.SchDoc	

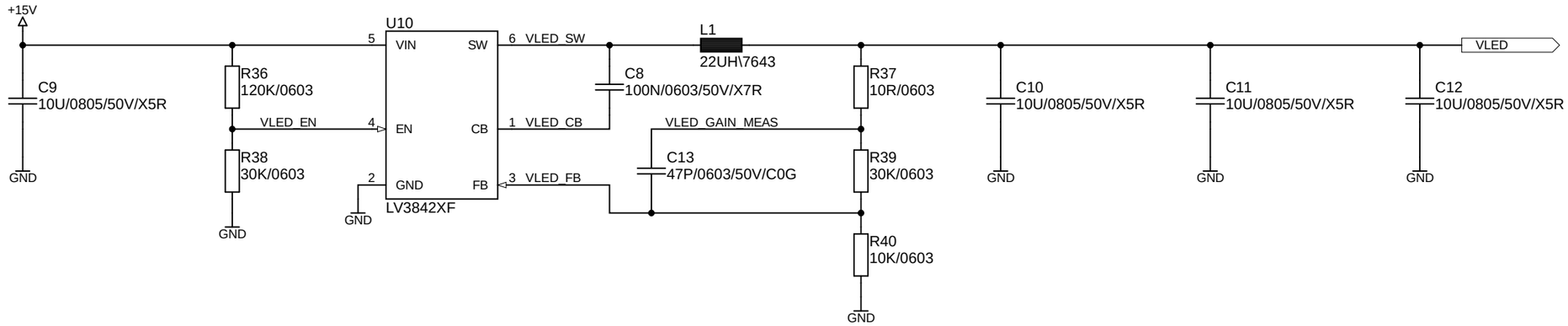

Power VLED		*
PS1-2BA	Battery Source - User Interface	*
Date: 2026-Mar-05	Sheet 7 of 9	Size: A3 *
Schema: ahorat / daniw	Layout: daniw	Power_VLED.SchDoc

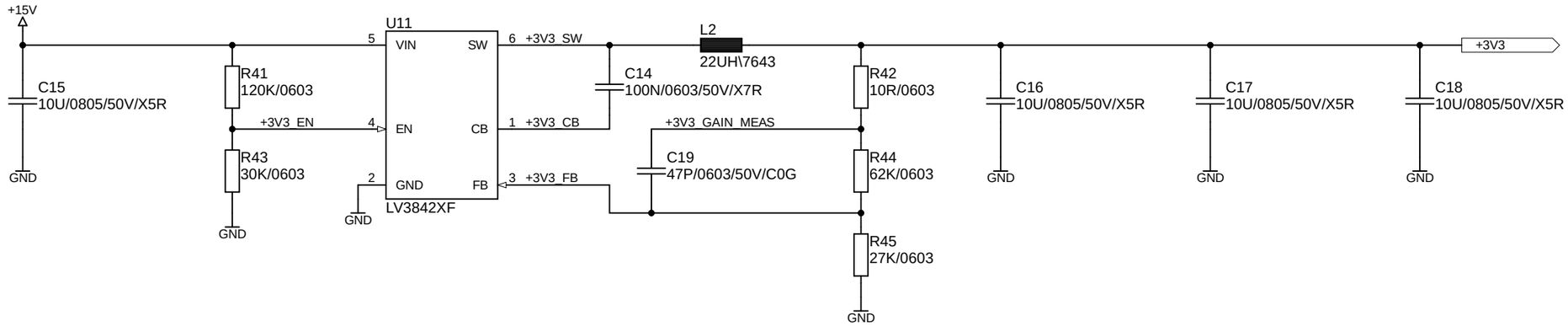

Power +3V3		*
PS1-2BA	Battery Source - User Interface	*
Date: 2026-Mar-05	Sheet 8 of 9	Size: A3 *
Schema: ahorat / daniw	Layout: daniw	Power_3V3.SchDoc

Adding additional transformers might be necessary due to isolation requirements for 600V CAT III (11mm)

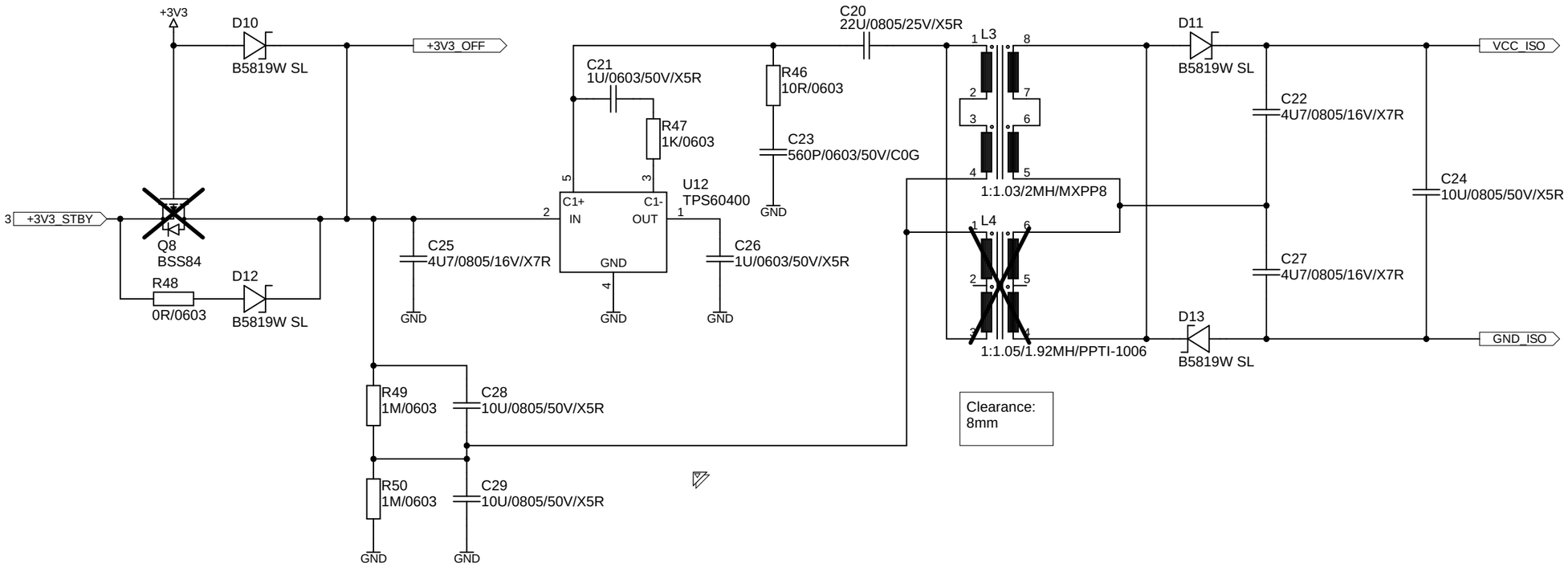

Power isolated		* * *
PS1-2BA	Battery Source - User Interface	
Date: 2026-Mar-05	Sheet 9 of 9	Size: A3
Schema: ahorat / daniw	Layout: daniw	Power_Iso.SchDoc