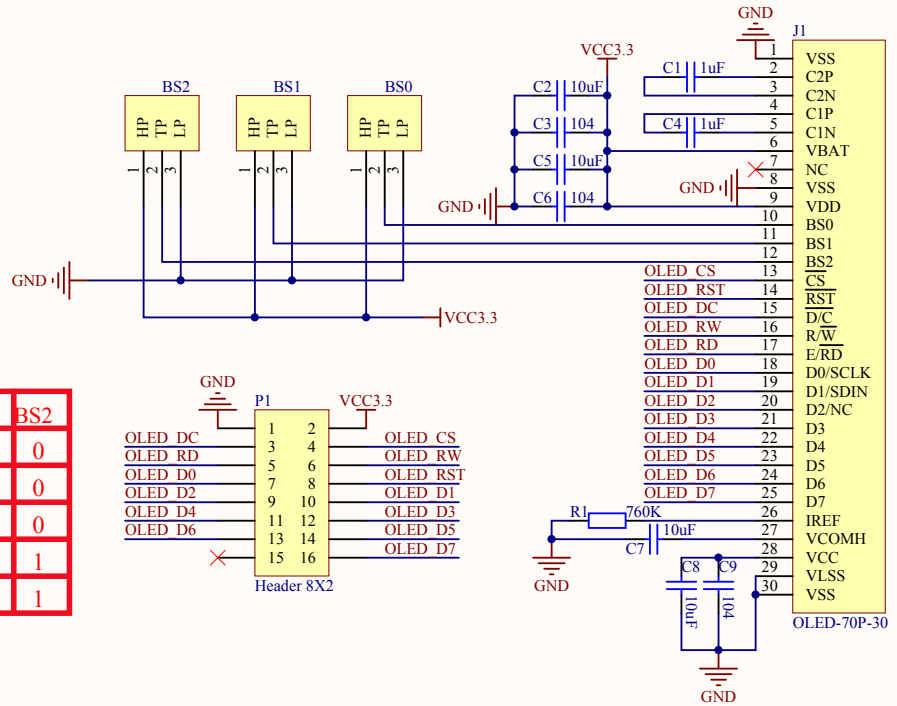

	BS0	BS1	BS2
IIC	0	1	0
3-Wire SPI	1	0	0
4-Wire SPI	0	0	0
8-bit 68XX Parallel	0	0	1
8-bit 80XX Parallel	0	1	1

Title		
Size A4	Number	Revision
Date: 2013/6/12		Sheet of
File: I:\0.96_OLED\0.96_OLED.SchDoc		Drawn By: