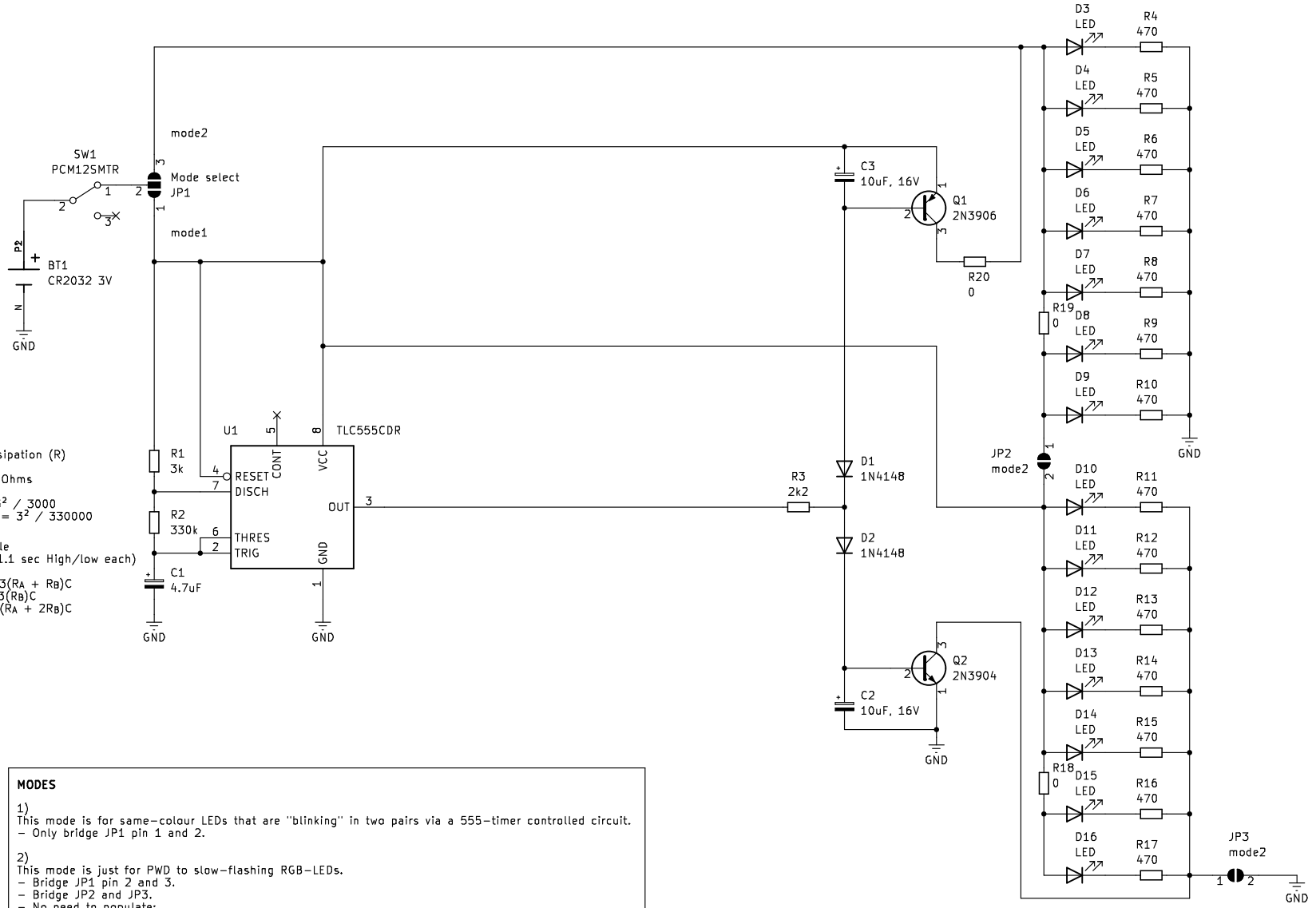

Power dissipation (R)

$P = V^2 / Ohms$

$0{,}003 = 3^2 / 3000$
$0{,}000027 = 3^2 / 330000$

555 Astable
0.46 Hz (1.1 sec High/low each)

$T_H = 0.693(R_A + R_B)C$
$T_L = 0.693(R_B)C$
$f = 1.44/(R_A + 2R_B)C$

MODES

1)
This mode is for same-colour LEDs that are "blinking" in two pairs via a 555-timer controlled circuit.
- Only bridge JP1 pin 1 and 2.

2)
This mode is just for PWD to slow-flashing RGB-LEDs.
- Bridge JP1 pin 2 and 3.
- Bridge JP2 and JP3.
- No need to populate:
  - R1, R2, R3, R20
  - C1, C2, C3
  - D1, D2
  - Q1, Q2
  - U1

Danni Randeris
Danni's Creations

Sheet: /
File: christmas_ornament_2023.kicad_sch

Title: Christmas Ornament 2023 – Tree

Size: A4	Date: 2023-11-12	**Rev: 1.0**
KiCad E.D.A. kicad 7.0.9		Id: 1/1