Git: (Distributed) Version Control

Lecture 2

The Need for Version Control

- Track evolution of a software artifact
  - Development is often non-linear
    - Older versions need to be supported
    - Newer versions need to be developed
  - Development is non-monotonic
    - May need to undo some work, go back to an older version, or track down when a mistake was introduced
- Facilitate team-based development
  - Multiple developers working on a common code base
  - How can project be edited simultaneously?

Key Idea: A Repository

- *Repository*= working tree + store + index
  - Warning: "Repo" often used (incorrectly) to mean just the store or just the working tree
- *Working tree* = project itself
  - Ordinary directory with files & subdirectories
- *Store* = history of project
  - Hidden directory: don't touch!
- *Index* = virtual snapshot
  - Gateway for moving changes in the working tree into the store (aka "stage", "cache")
- *History* = DAG of *commits*
  - Each node in graph corresponds to a complete snapshot of the entire project

File Structure of a Repository


```
~/mashup/
├── css/
│   ├── buckeye-alert-resp.css
│   └── demo.css
├── demo-js.html
├── Gemfile
├── Gemfile.lock
├── .git/
│   ├── HEAD
│   ├── index
│   └── ...etc...
├── .gitignore
├── Rakefile
├── README.md
└── ...etc...
```

Conceptual Structure

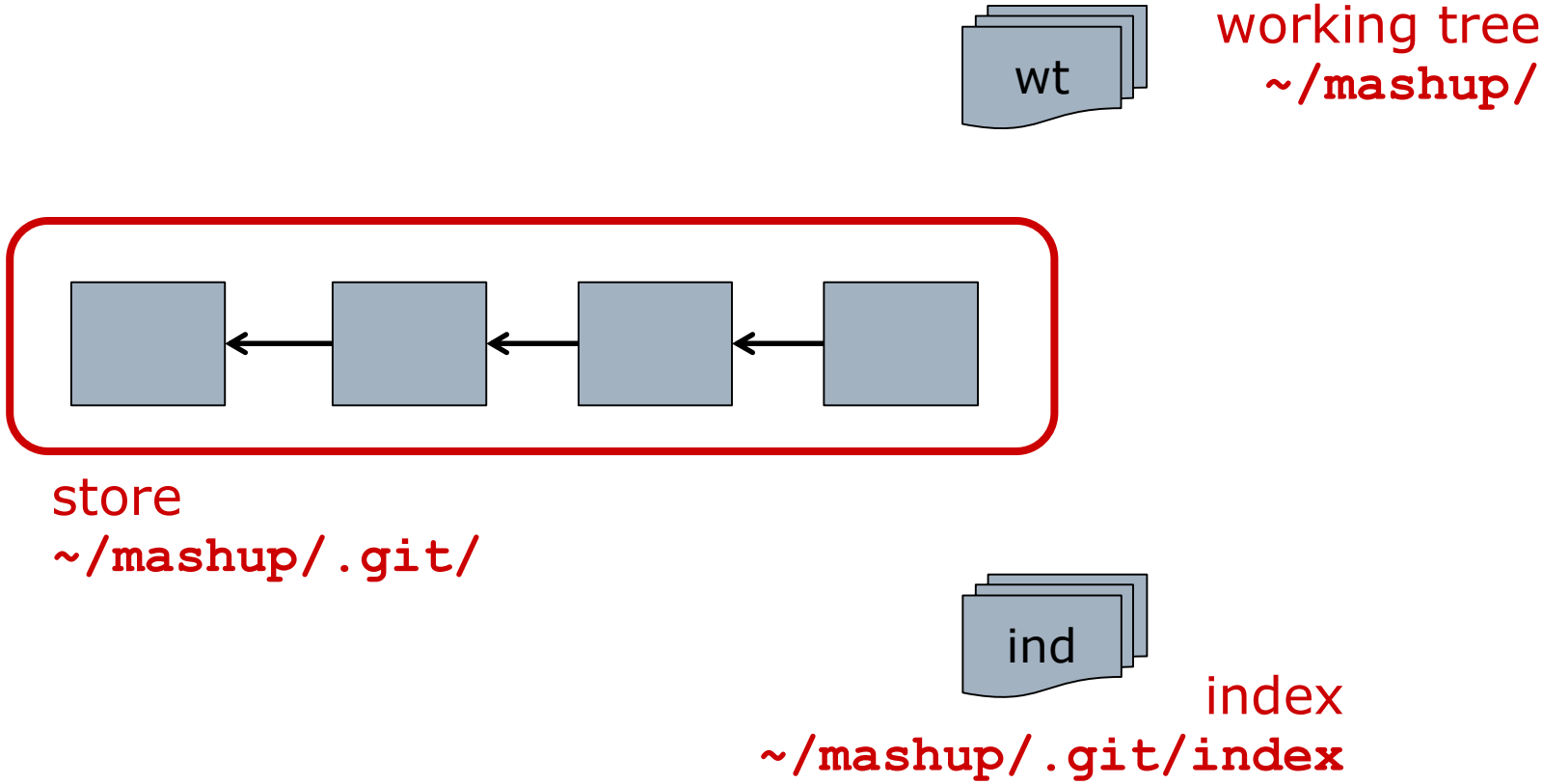

A History of Commits

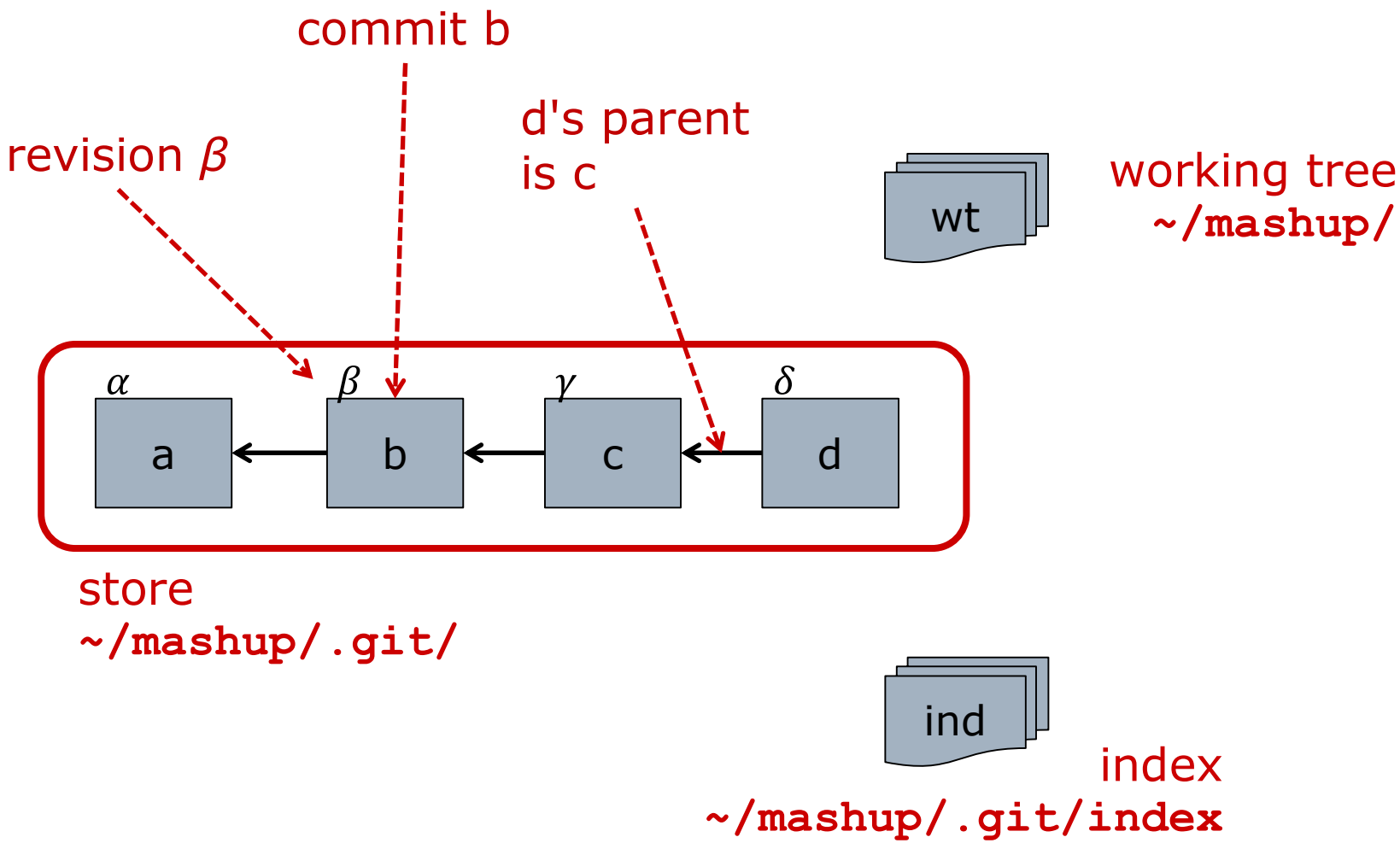

History is a DAG

- Every commit (except the first) has 1 or more parents

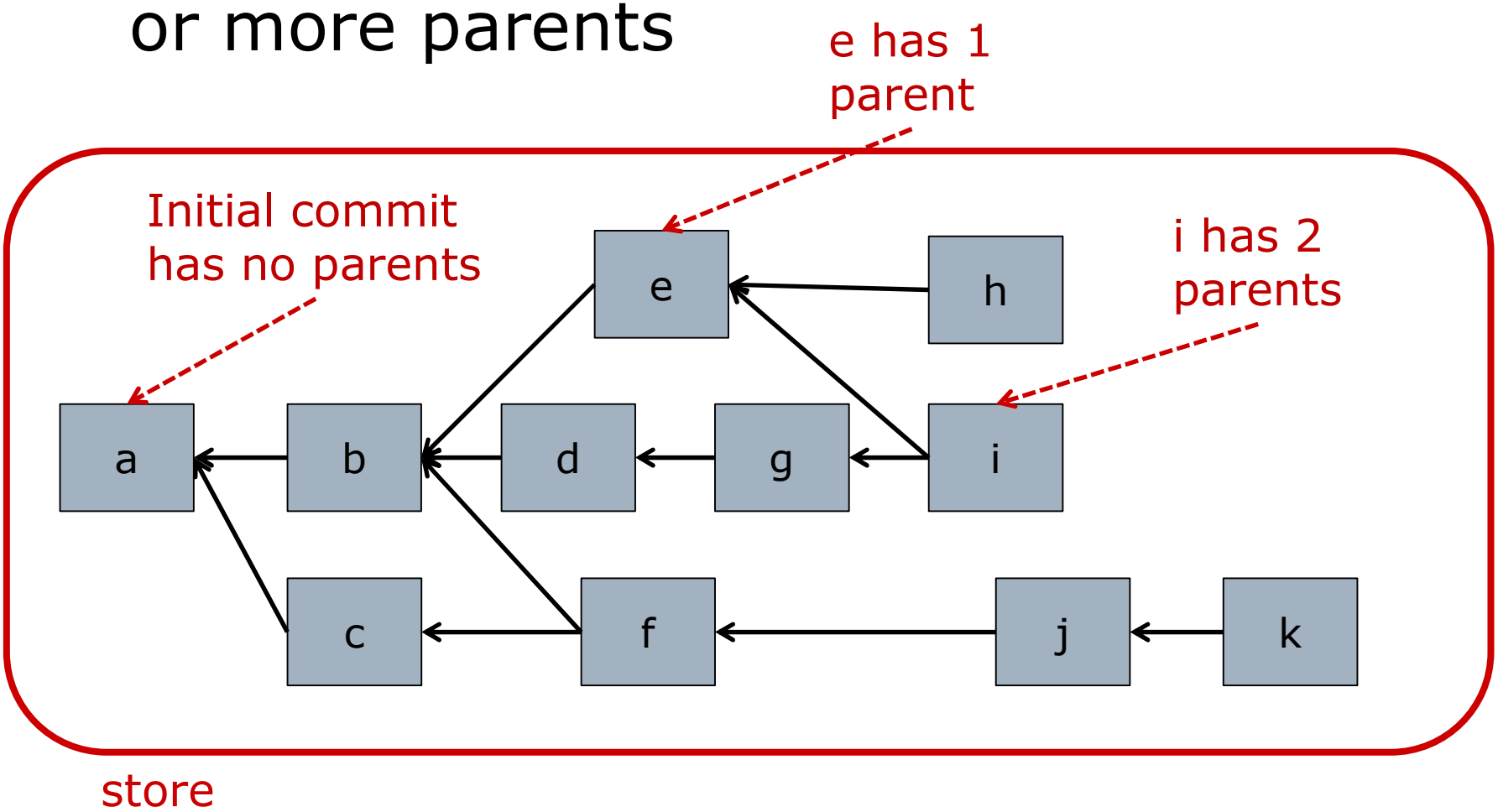

Example View of DAG

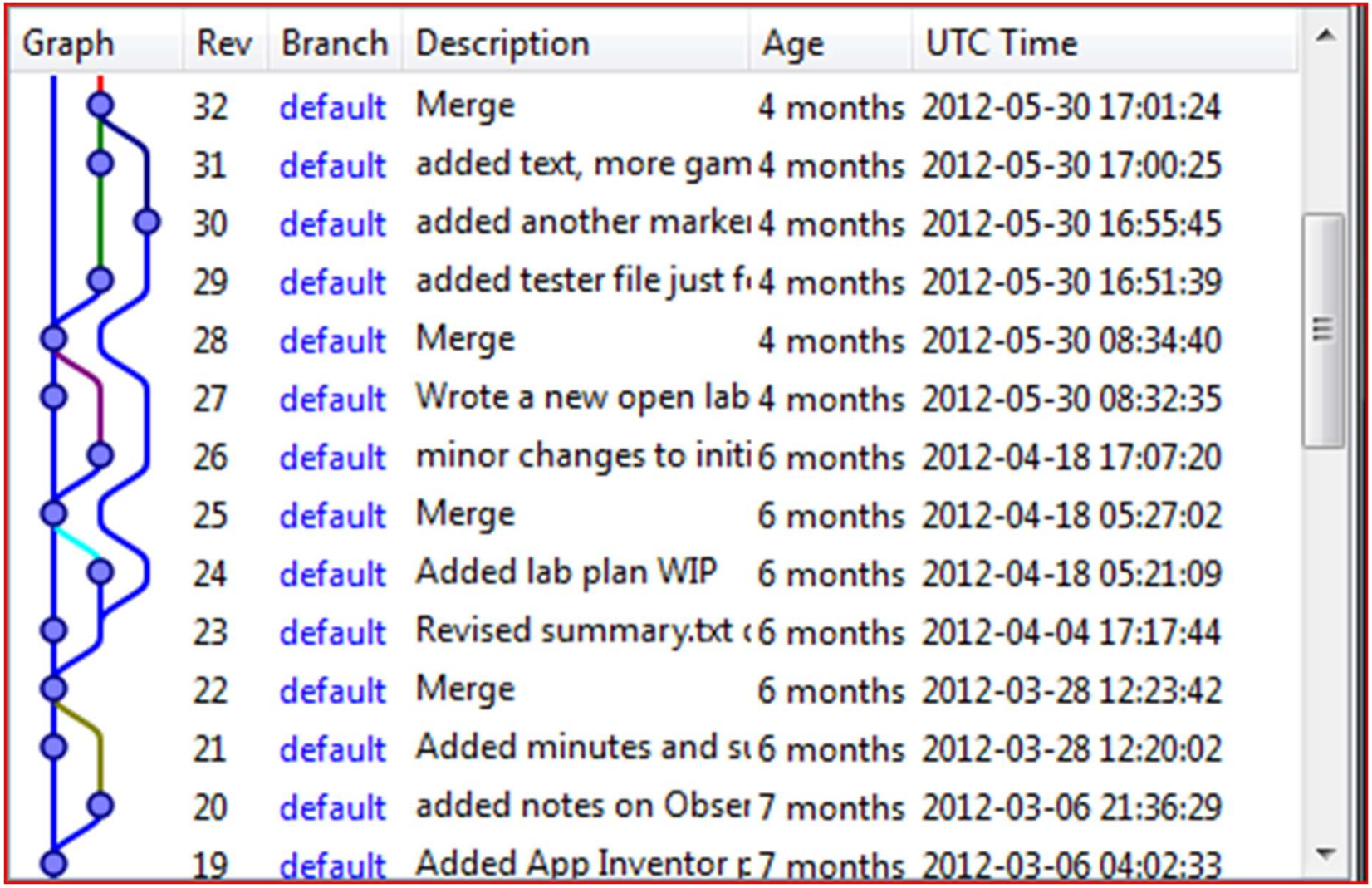

Graph	Rev	Branch	Description	Age	UTC Time
	32	default	Merge	4 months	2012-05-30 17:01:24
	31	default	added text, more gam	4 months	2012-05-30 17:00:25
	30	default	added another marke	4 months	2012-05-30 16:55:45
	29	default	added tester file just f	4 months	2012-05-30 16:51:39
	28	default	Merge	4 months	2012-05-30 08:34:40
	27	default	Wrote a new open lab	4 months	2012-05-30 08:32:35
	26	default	minor changes to initi	6 months	2012-04-18 17:07:20
	25	default	Merge	6 months	2012-04-18 05:27:02
	24	default	Added lab plan WIP	6 months	2012-04-18 05:21:09
	23	default	Revised summary.txt	6 months	2012-04-04 17:17:44
	22	default	Merge	6 months	2012-03-28 12:23:42
	21	default	Added minutes and s	6 months	2012-03-28 12:20:02
	20	default	added notes on Obse	7 months	2012-03-06 21:36:29
	19	default	Added App Inventor p	7 months	2012-03-06 04:02:33

Example View of DAG


```
$ git log --oneline --no-decorate --graph

* 1618849 clean up css
*   d579fa2 merge in improvements from master
|\
| * 0f10869 replace image-url helper in css
* | b595b10 add buckeye alert notes
* | a6e8eb3 add raw buckeye alert download
|/
* b4e201c wrap osu layout around content
* e9d3686 add Rakefile and refactor schedule loop
* 515aaa3 create README.md
* eb26605 initial commit
```

Commit

- Each commit is identified by a hash
  - 160 bits (i.e., 40 hex digits)
  - Practically guaranteed to be unique
  - Can use short prefix of hash if unique

```
$ git show --name-only --no-decorate
commit 16188493c252f6924baa17c9b84a4c1baaed438b
Author: Paul Sivilotti <user.pags@server.fake>
Date:   Mon Mar 31 15:30:50 2014 +0200

    clean up css

source/stylesheets/_site.css
```

History is a DAG

- A better picture would label each commit with its hash (prefix)

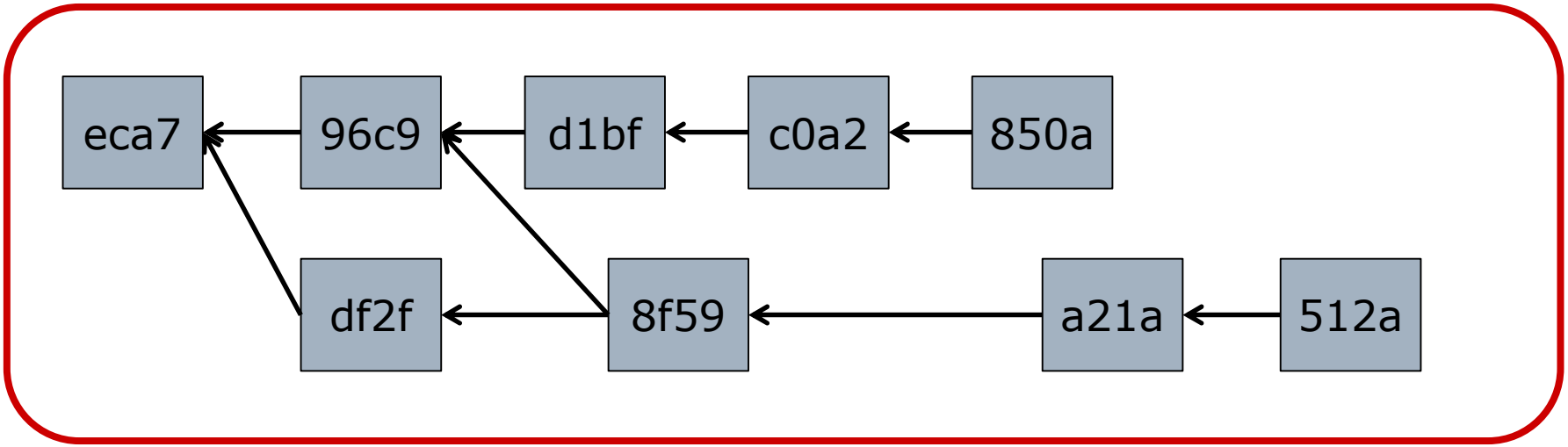

- But in these slides we abbreviate the hash id's as just: 'a', 'b', 'c'…

Nomenclature: Branch

- *Branch*: a pointer to a commit
- Different from “branch” in DAG's shape

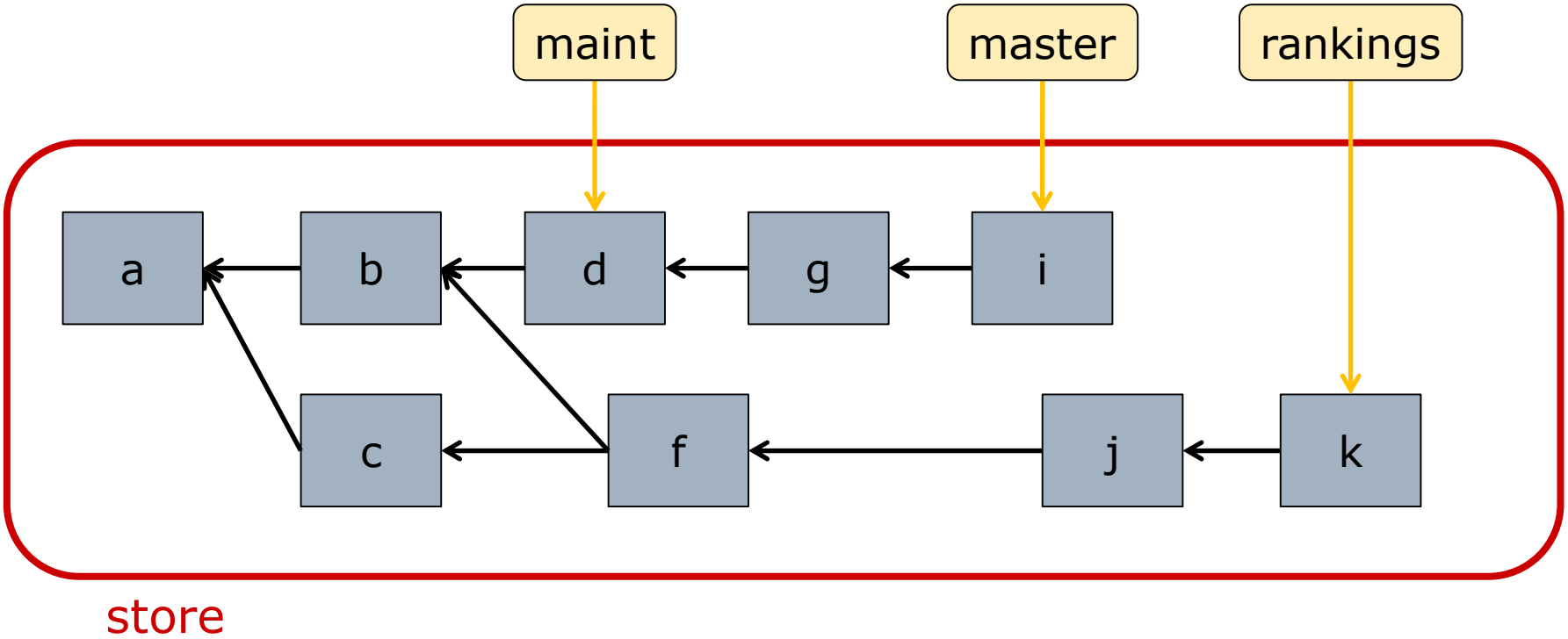

A Note on Changing Defaults

- Any name can be used for a branch
  - Typically short, but hopefully descriptive
  - Many branches, each with a unique name
- Initially, a repo has a single branch
  - Default name has been "master"
  - Recently this default became user-configurable! (git 2.28, 7/27/20)
  - Repos created on GitHub will soon use "main" as the default name! (10/1/20)

Nomenclature: HEAD

- *HEAD*: a special reference, (usually) points to a branch

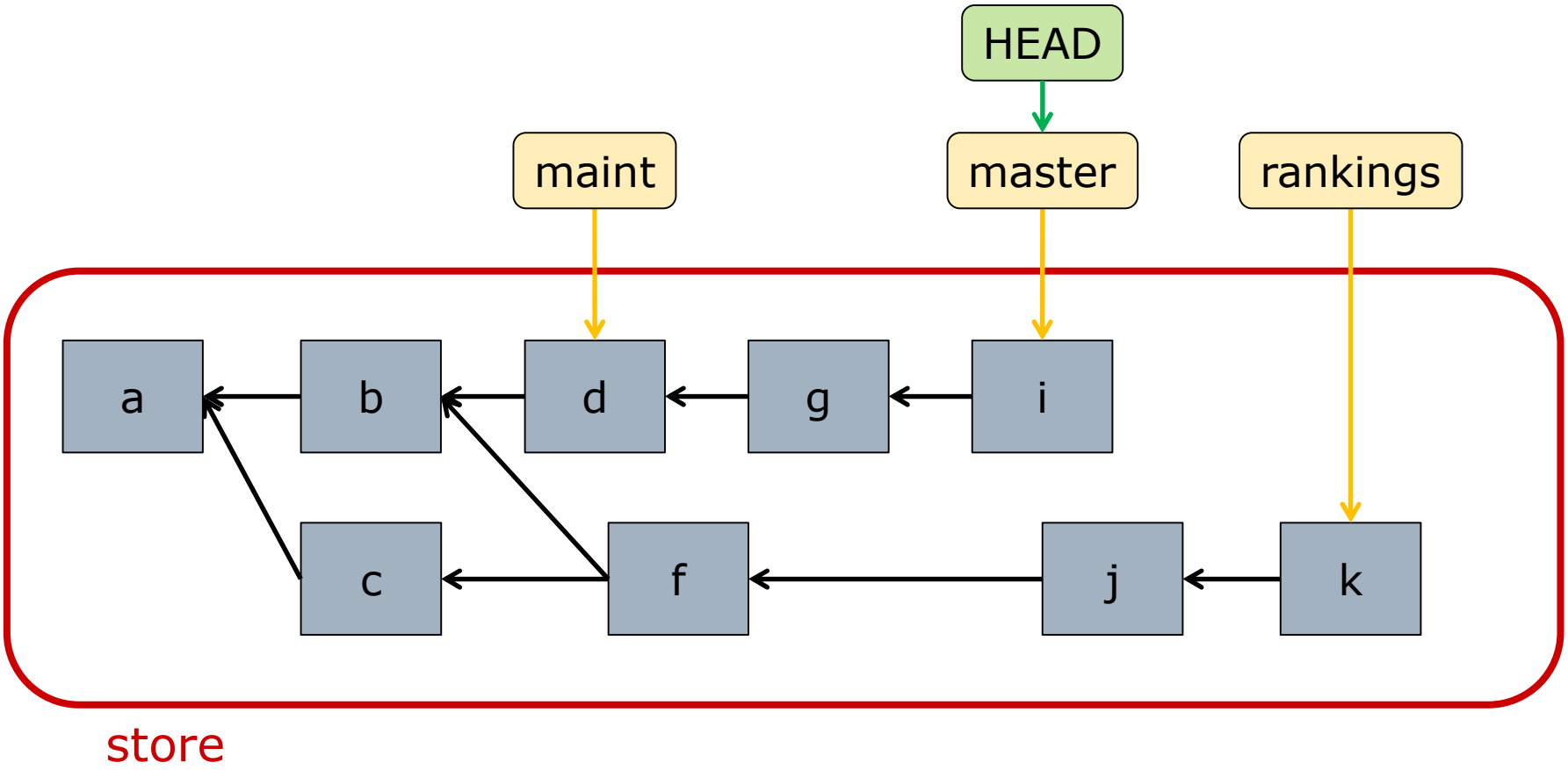

Nomenclature: HEAD

- Useful to think of HEAD as being "attached" to a particular branch

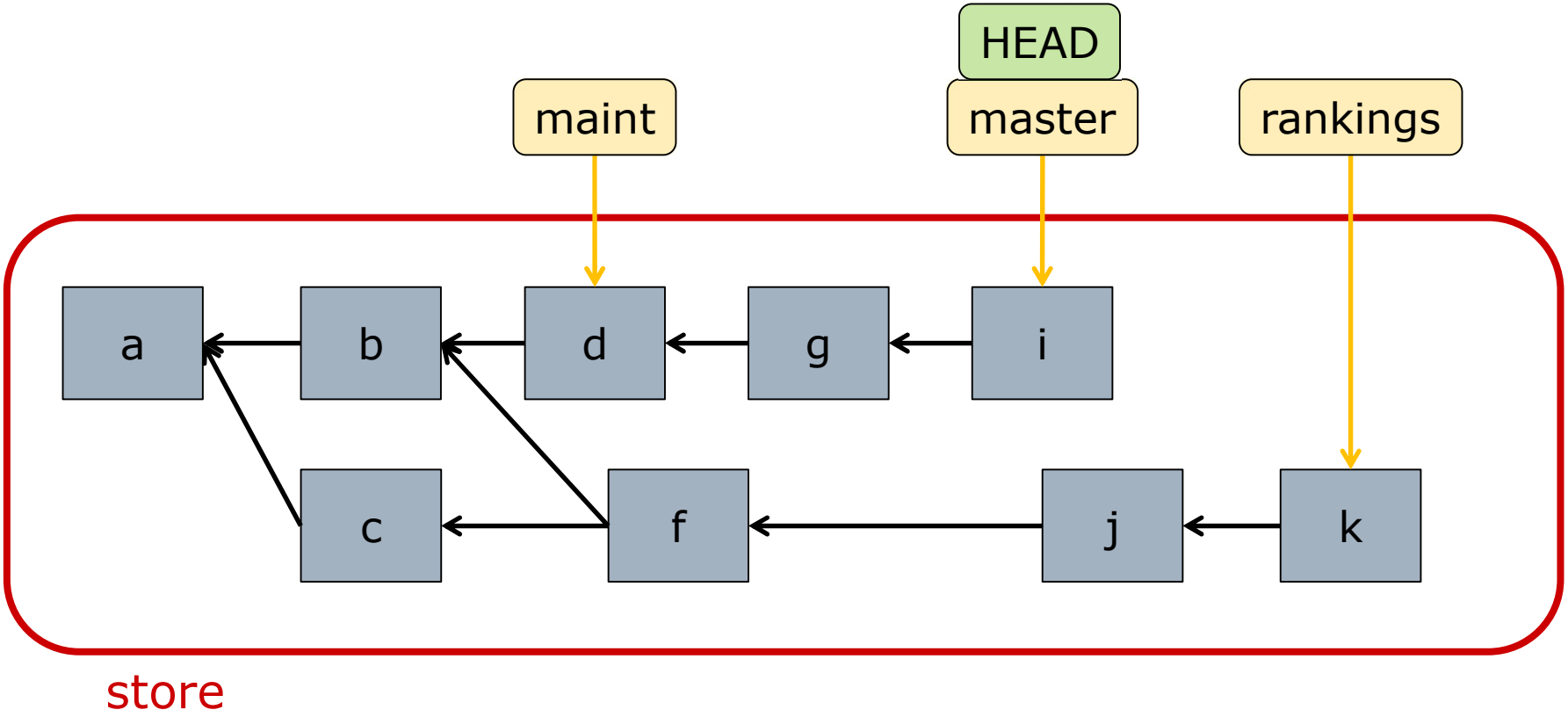

View of DAG with Branches


```
$ git log --oneline --graph

* 1618849 (HEAD -> master) clean up css
*   d579fa2 (alert) merge in improvements from master
|\
| * 0f10869 replace image-url helper in css
* | b595b10 add buckeye alert notes
* | a6e8eb3 add raw buckeye alert download
|/
* b4e201c wrap osu layout around content
* e9d3686 add Rakefile and refactor schedule loop
* 515aaa3 create README.md
* eb26605 initial commit
```

A "Clean" Repository

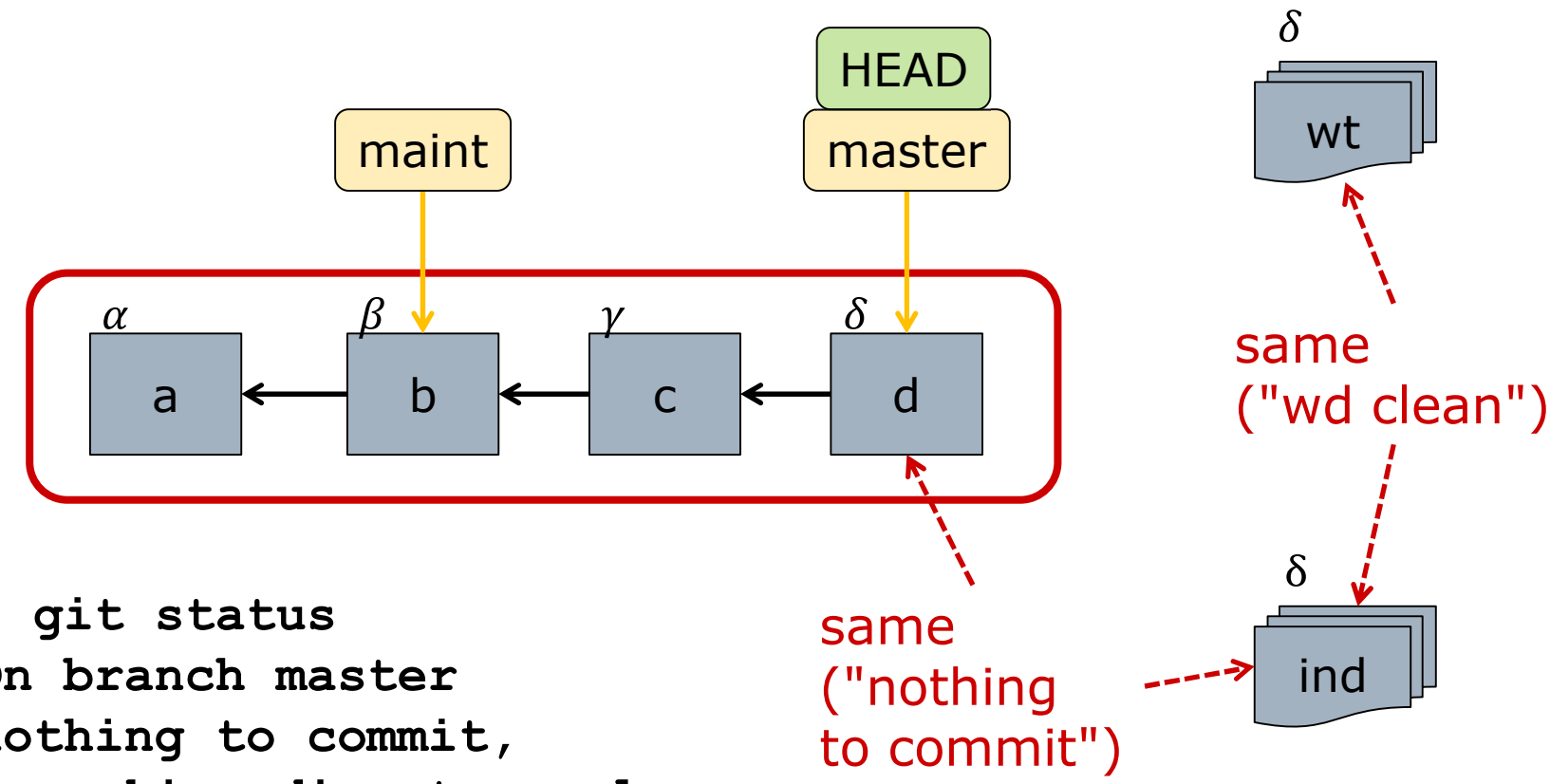


```
$ git status
On branch master
nothing to commit,
  working directory clean
```

Edit Files in Working Tree

- Add files, remove files, edit files…

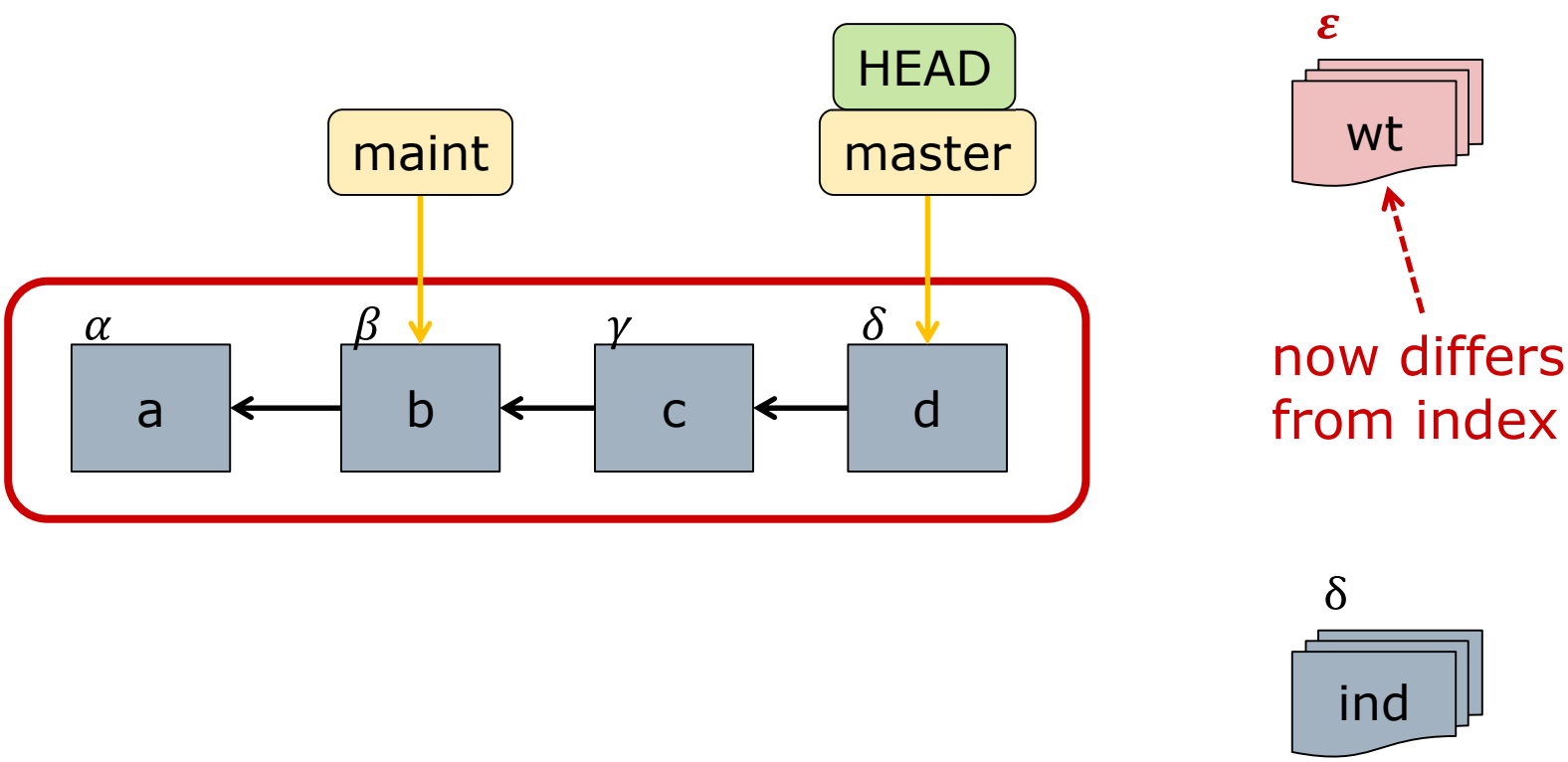

Edit Files in Working Tree

- Add files, remove files, edit files…

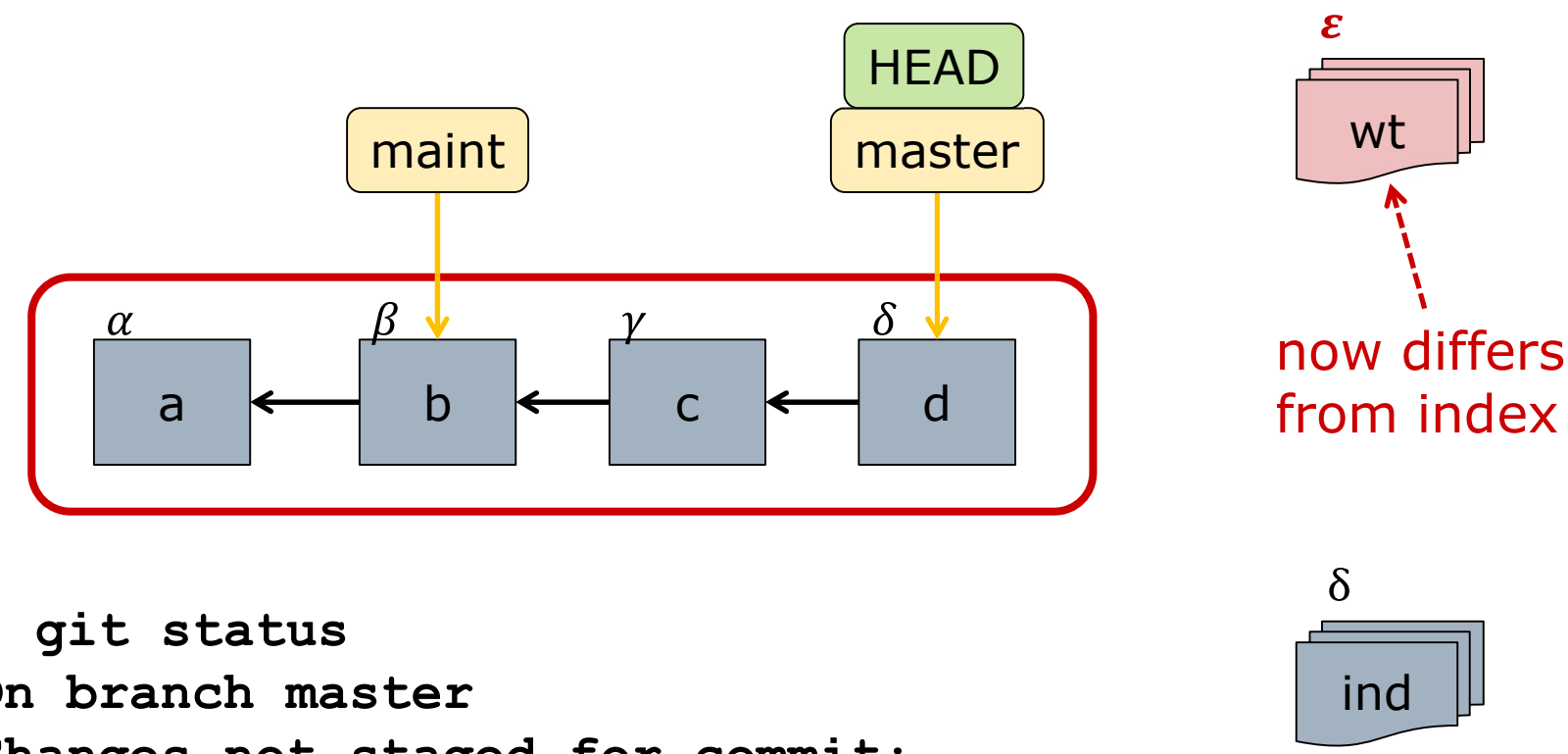


```
$ git status
On branch master
Changes not staged for commit:
    modified: css/demo.css
```

Add: Working Tree → Index


```
$ git add --all .
```

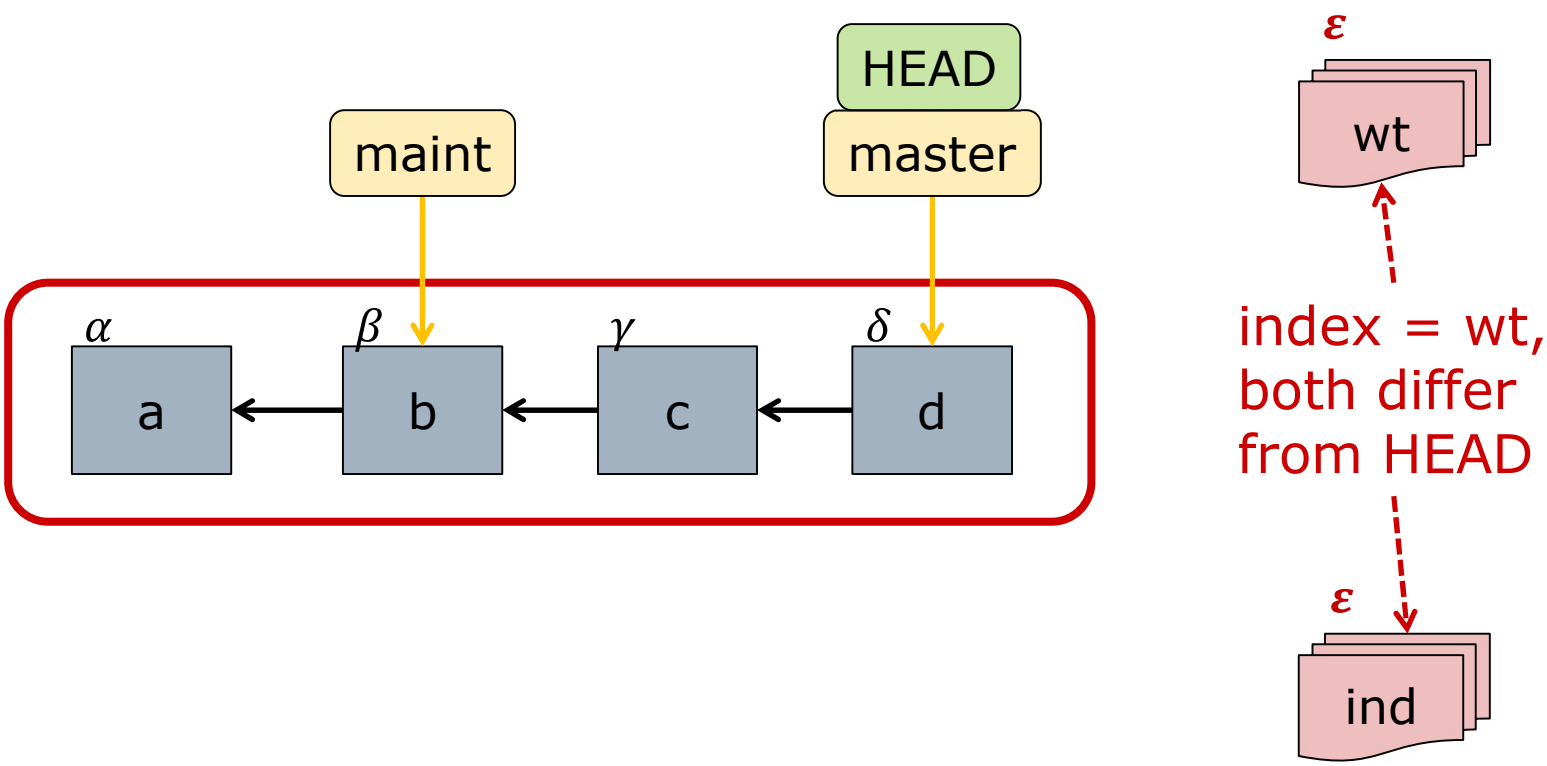

Add: Working Tree → Index


```
$ git add --all .
```

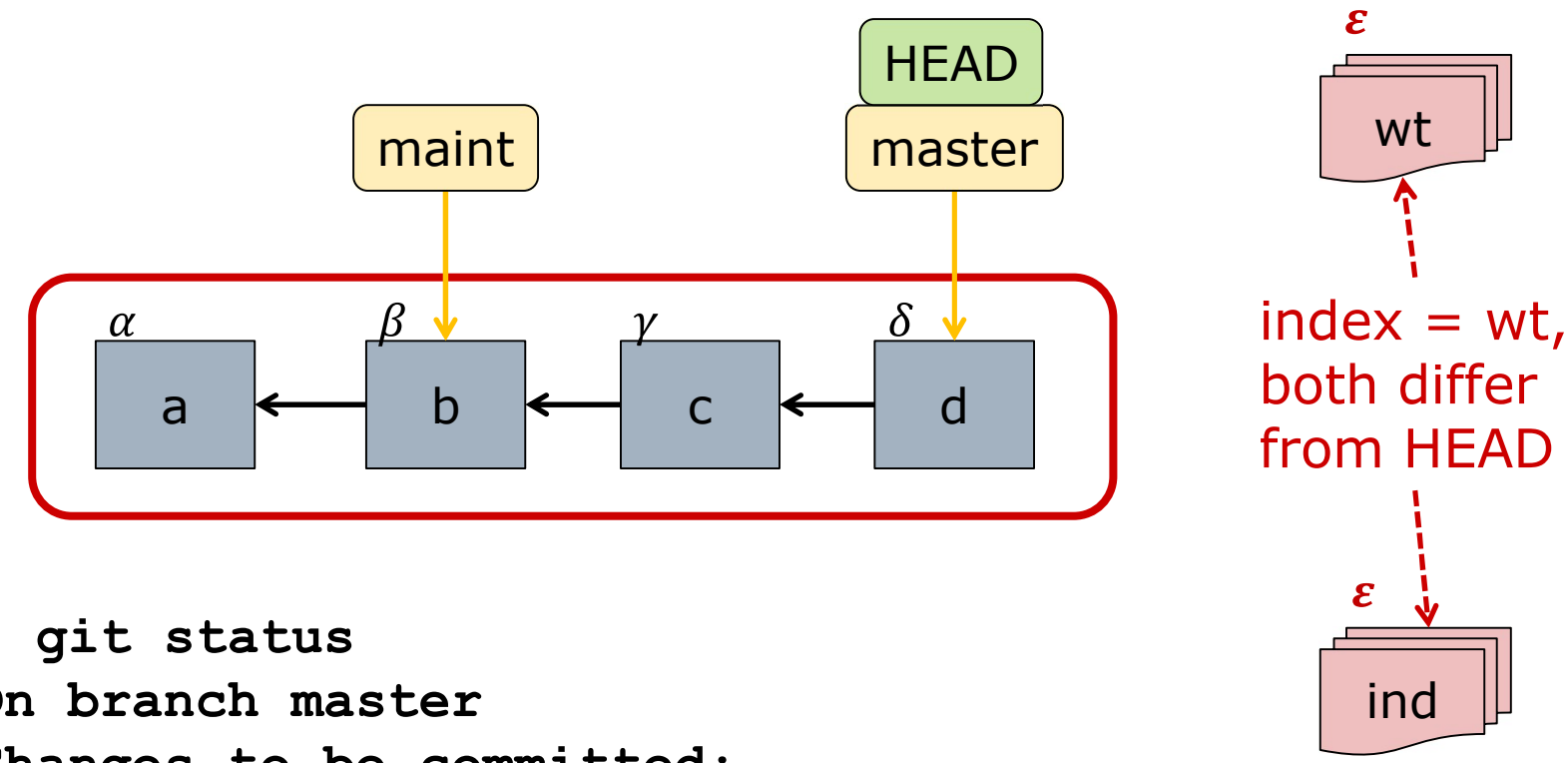


```
$ git status
On branch master
Changes to be committed:
    modified: css/demo.css
```

Commit: Index → Store


```
$ git commit
```

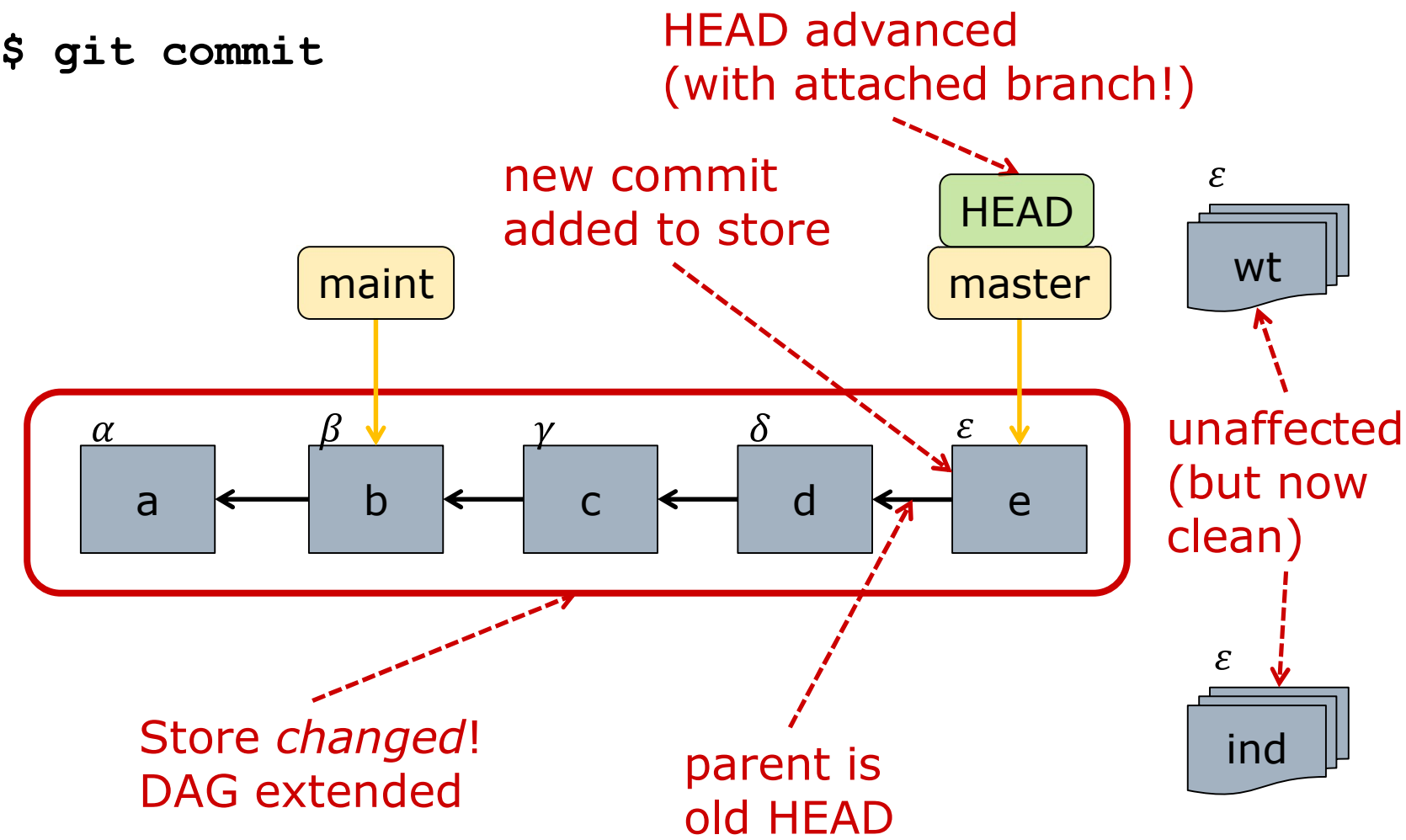

The (New) State of Repository

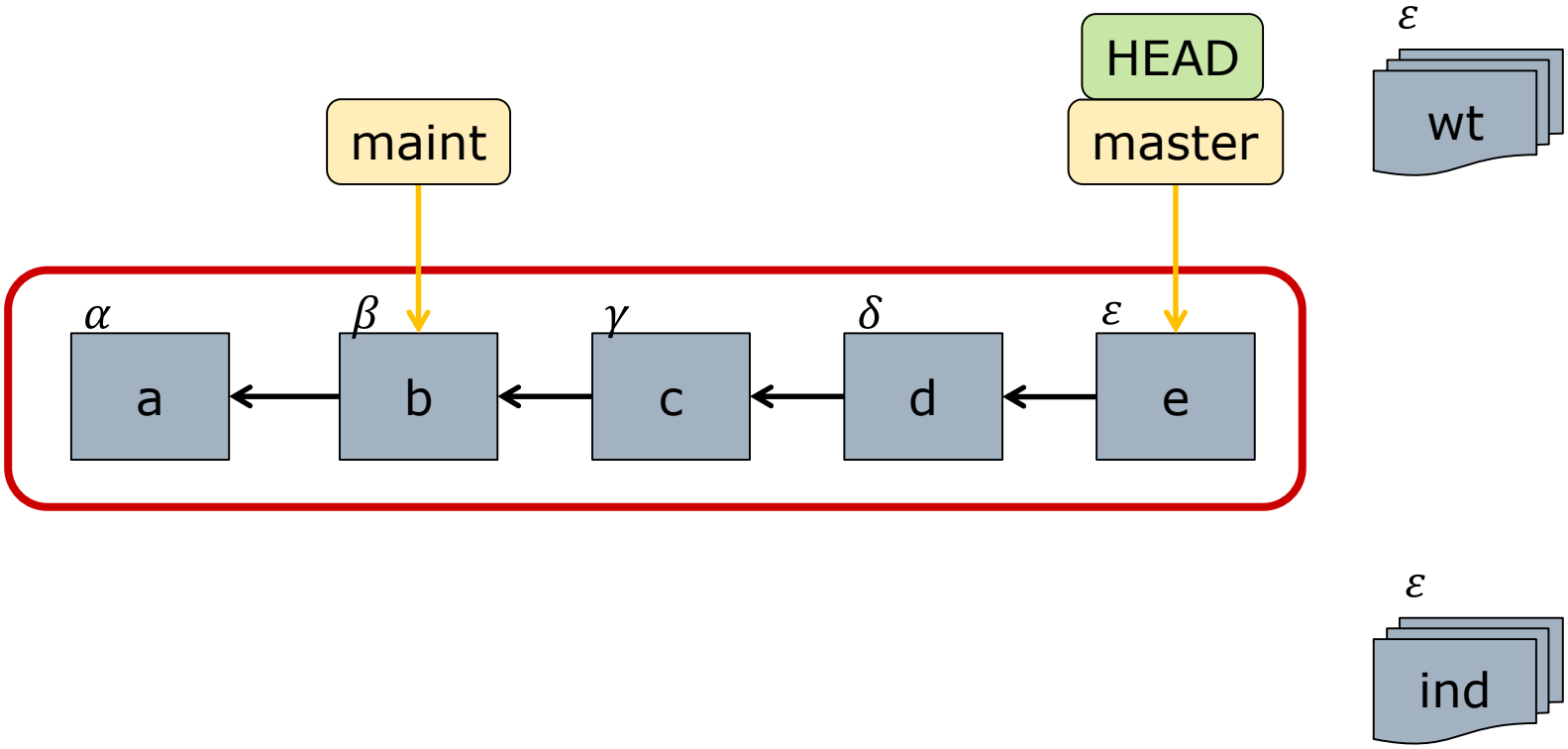

Creating a New Branch


```
$ git branch fix
```

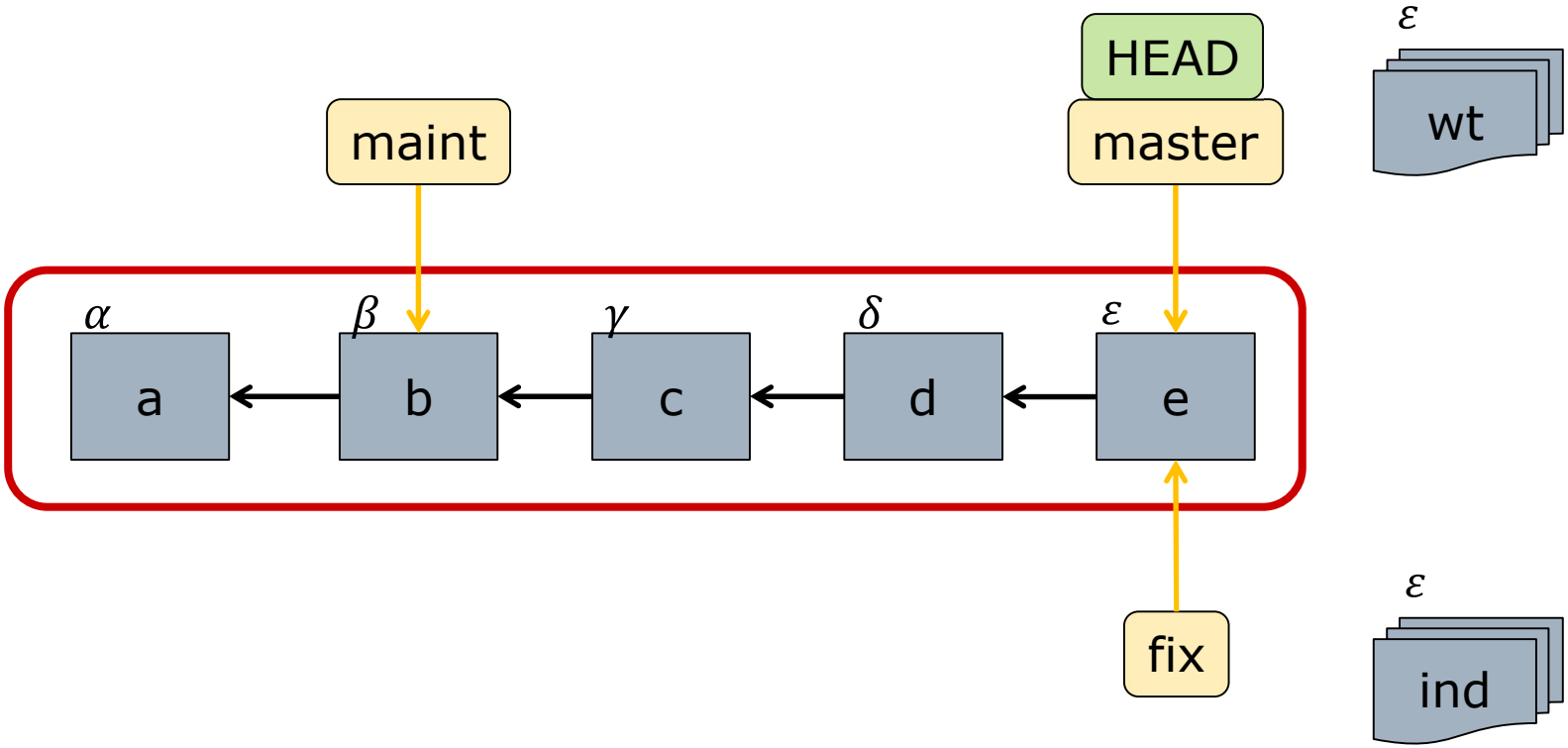

Checkout: Changing Branch


```
$ git checkout fix
```

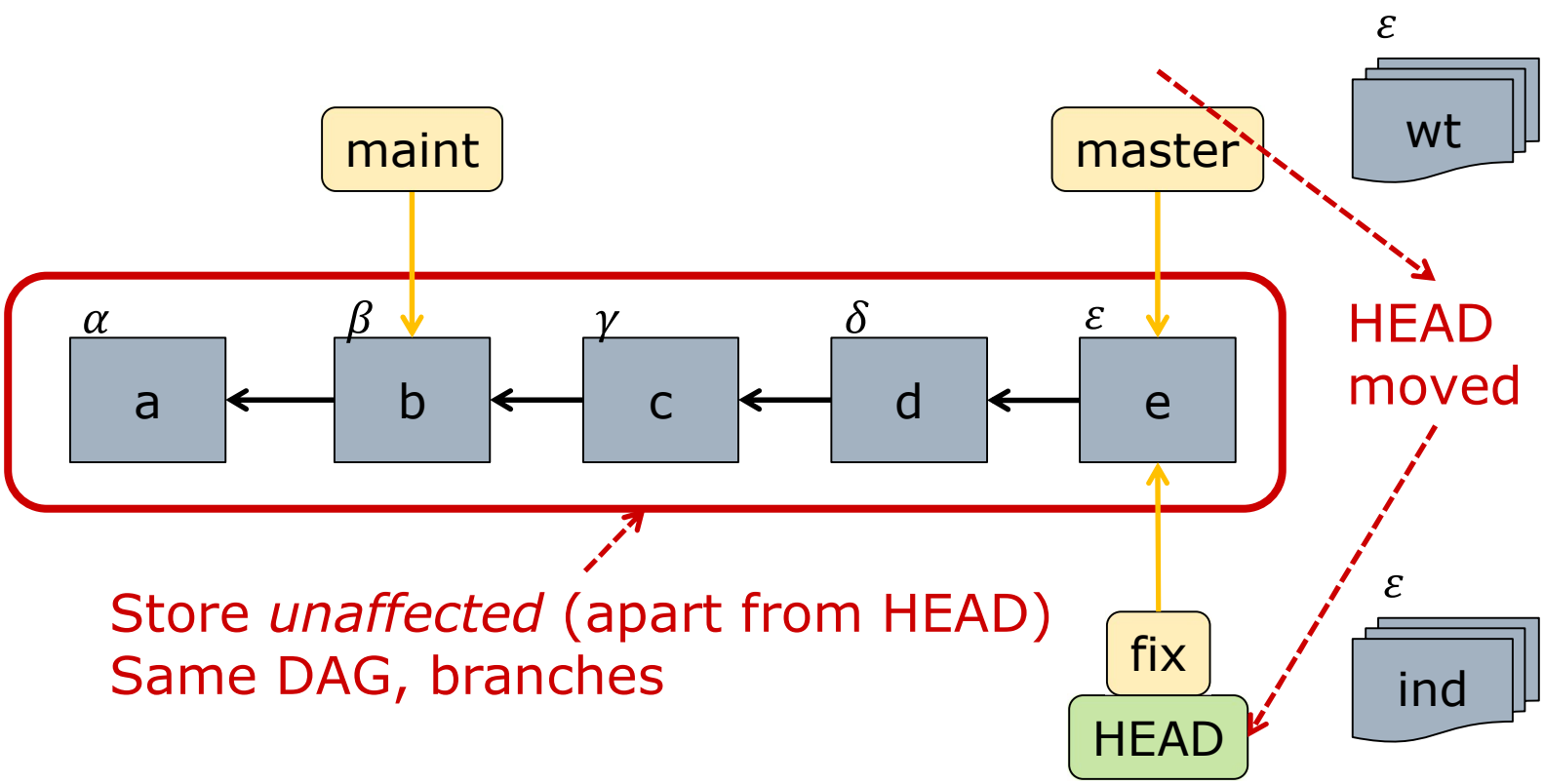

Checkout: Changing Branch


```
$ git checkout maint
```

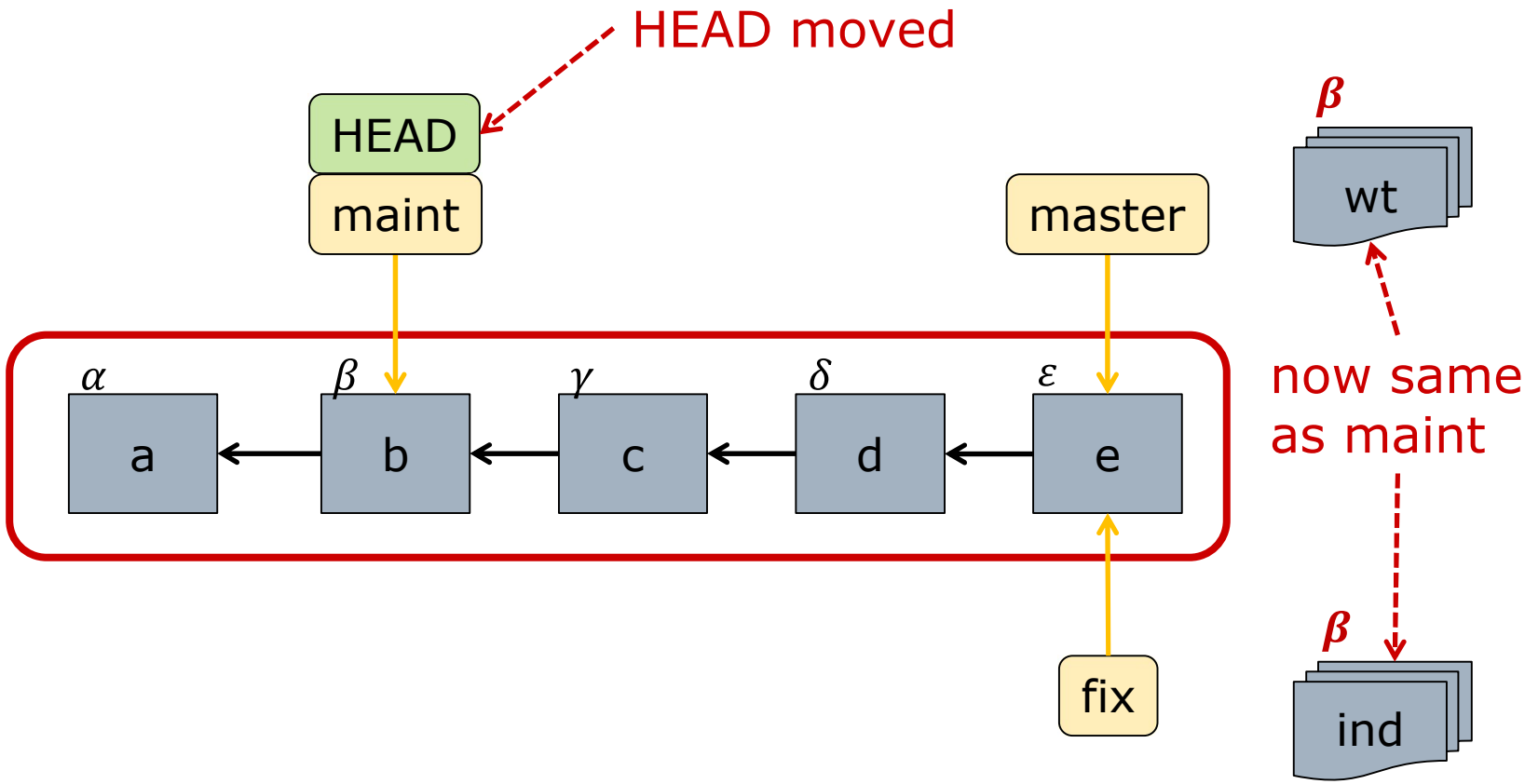

- Advice: checkout <branch> *only* when wt is clean

Edit Files in Working Tree

- Add files, remove files, edit files…

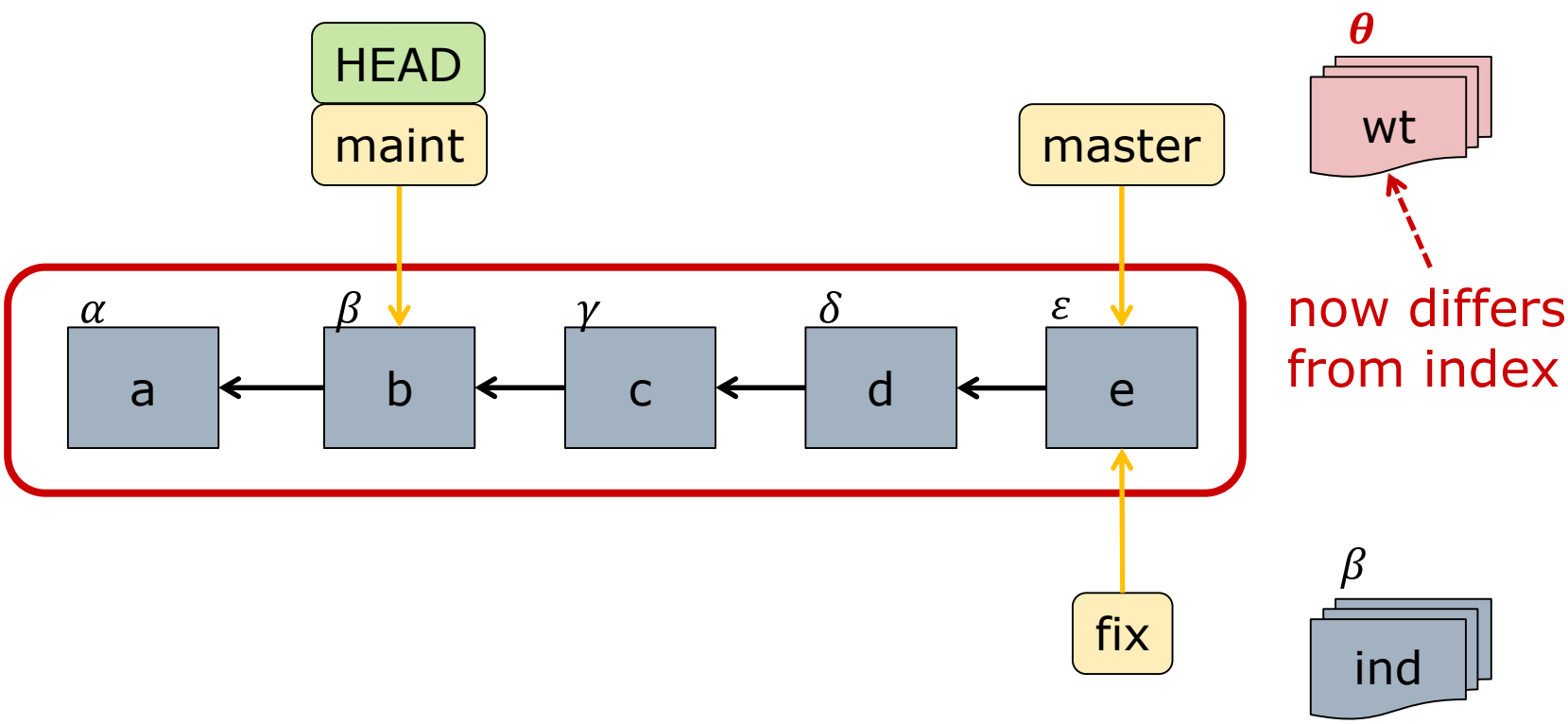

Add & Commit: Update Store


```
$ git add --all .
$ git commit
```

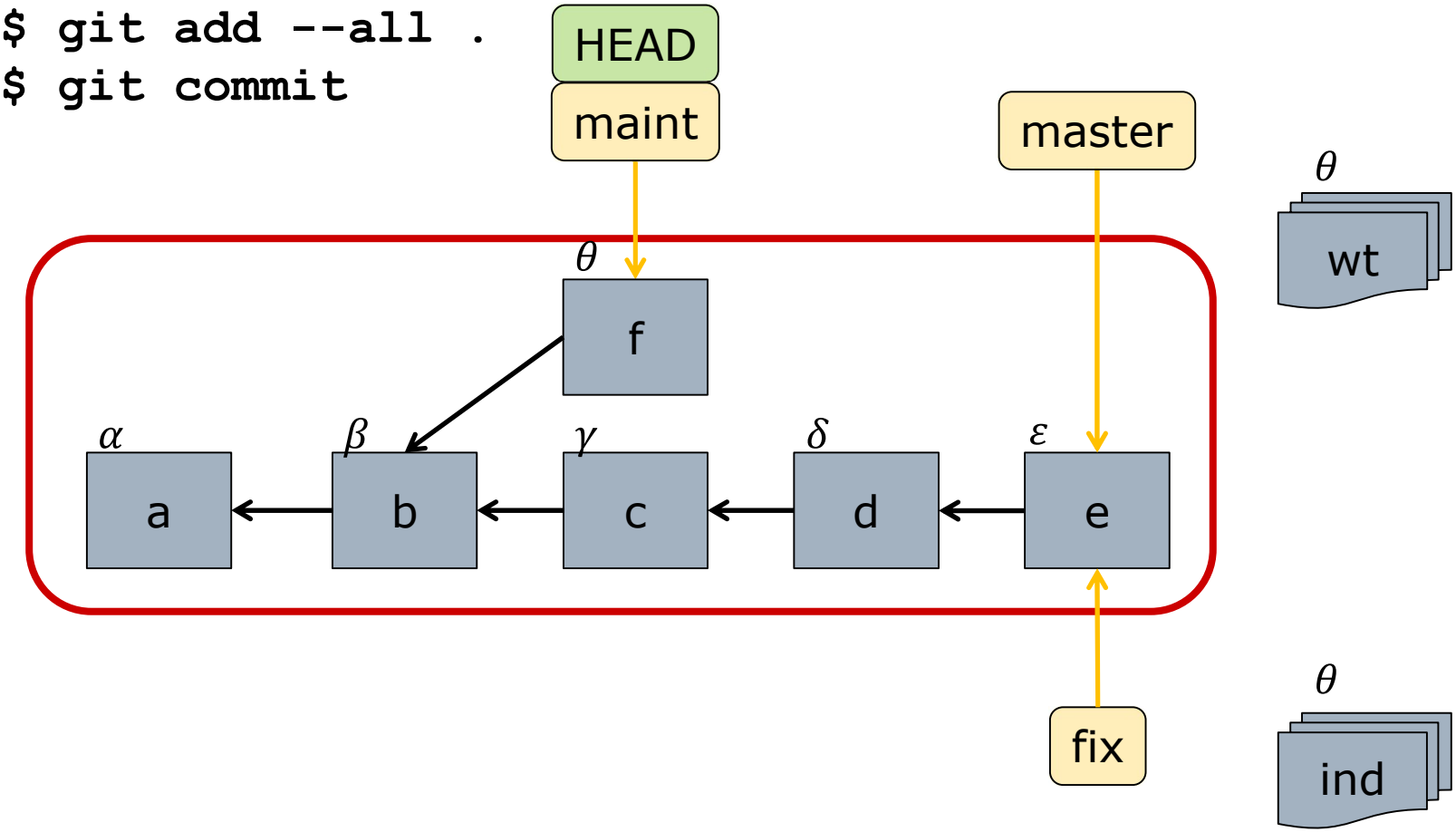

Merge: Bringing History together

- Bring work from another branch into current branch
  - Implemented features, fixed bugs, etc.
- Updates current branch, not other

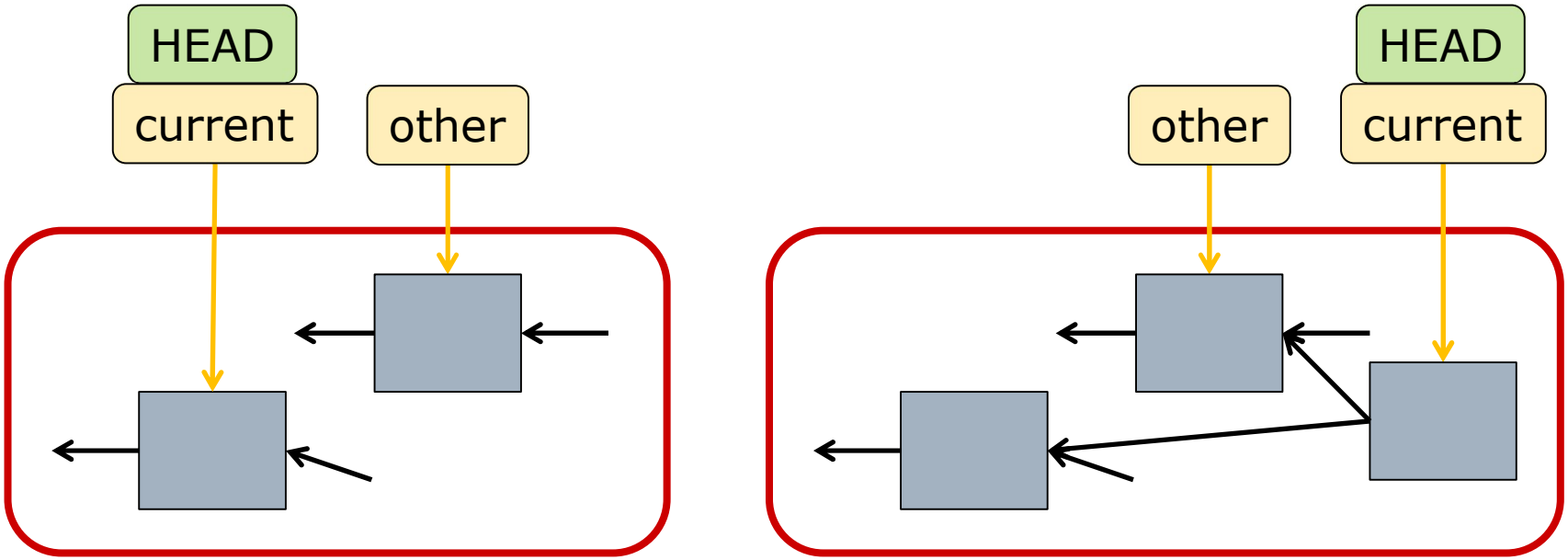

Merge – Case 1: Ancestor

- HEAD is an ancestor of other branch

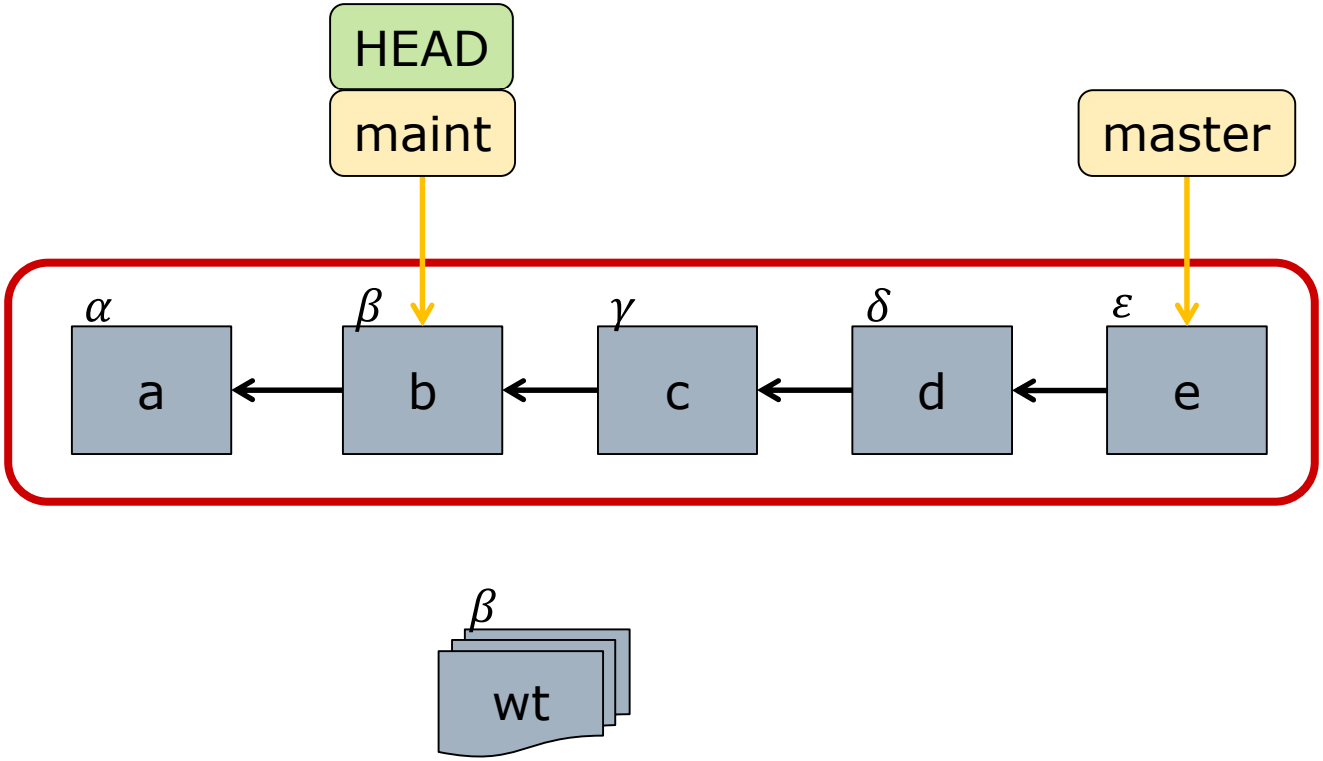

Fast-Forward Merge


```
$ git merge master
```

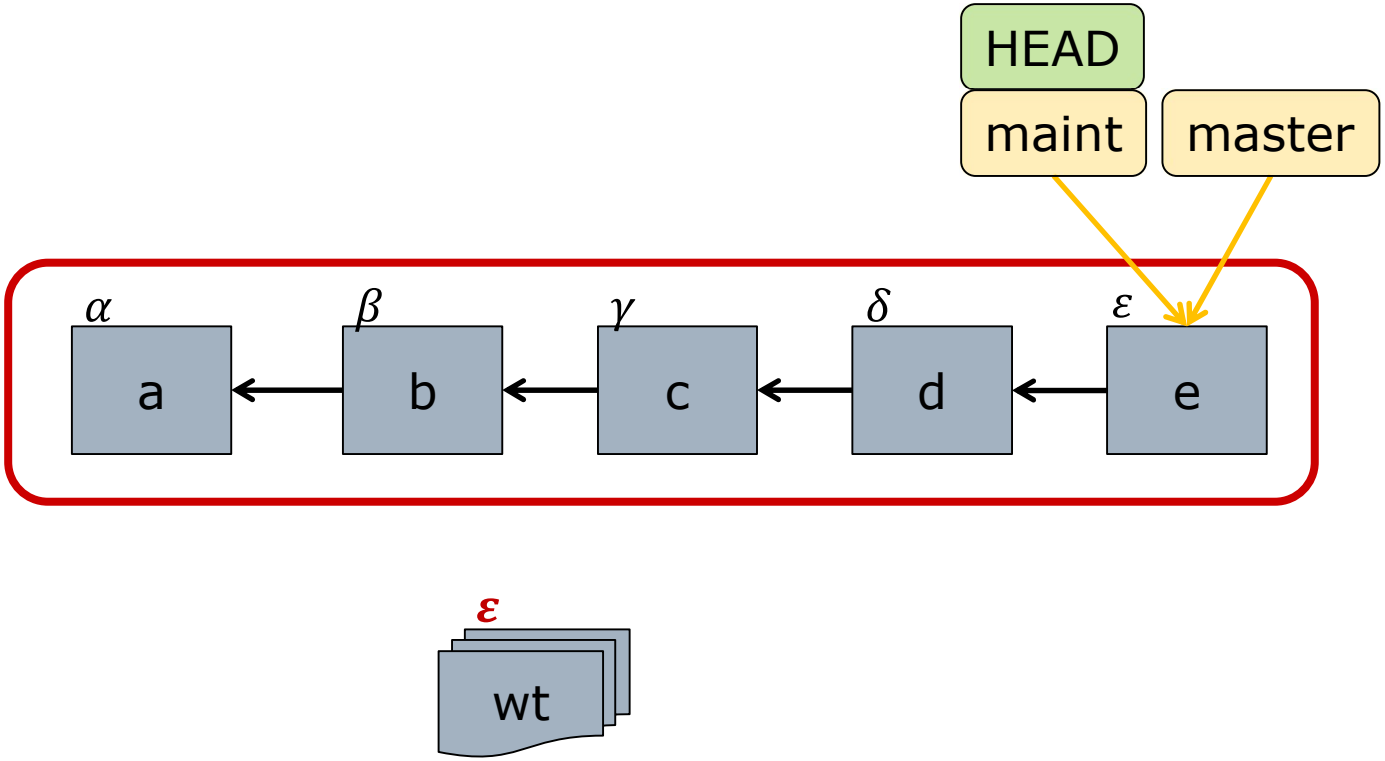

Merge – Case 2: No Conflicts

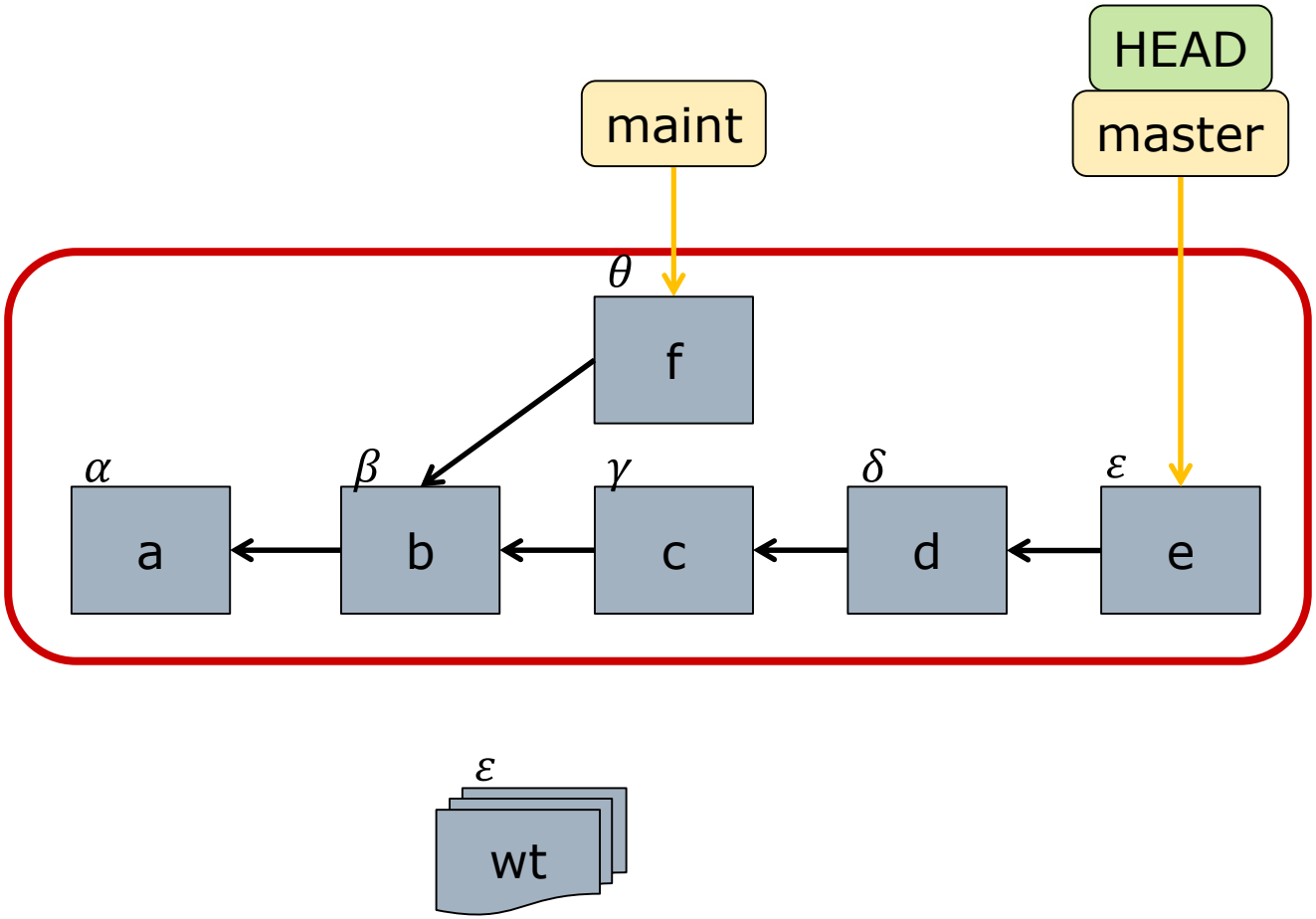

Merge Automatically Commits


```
$ git merge maint
```

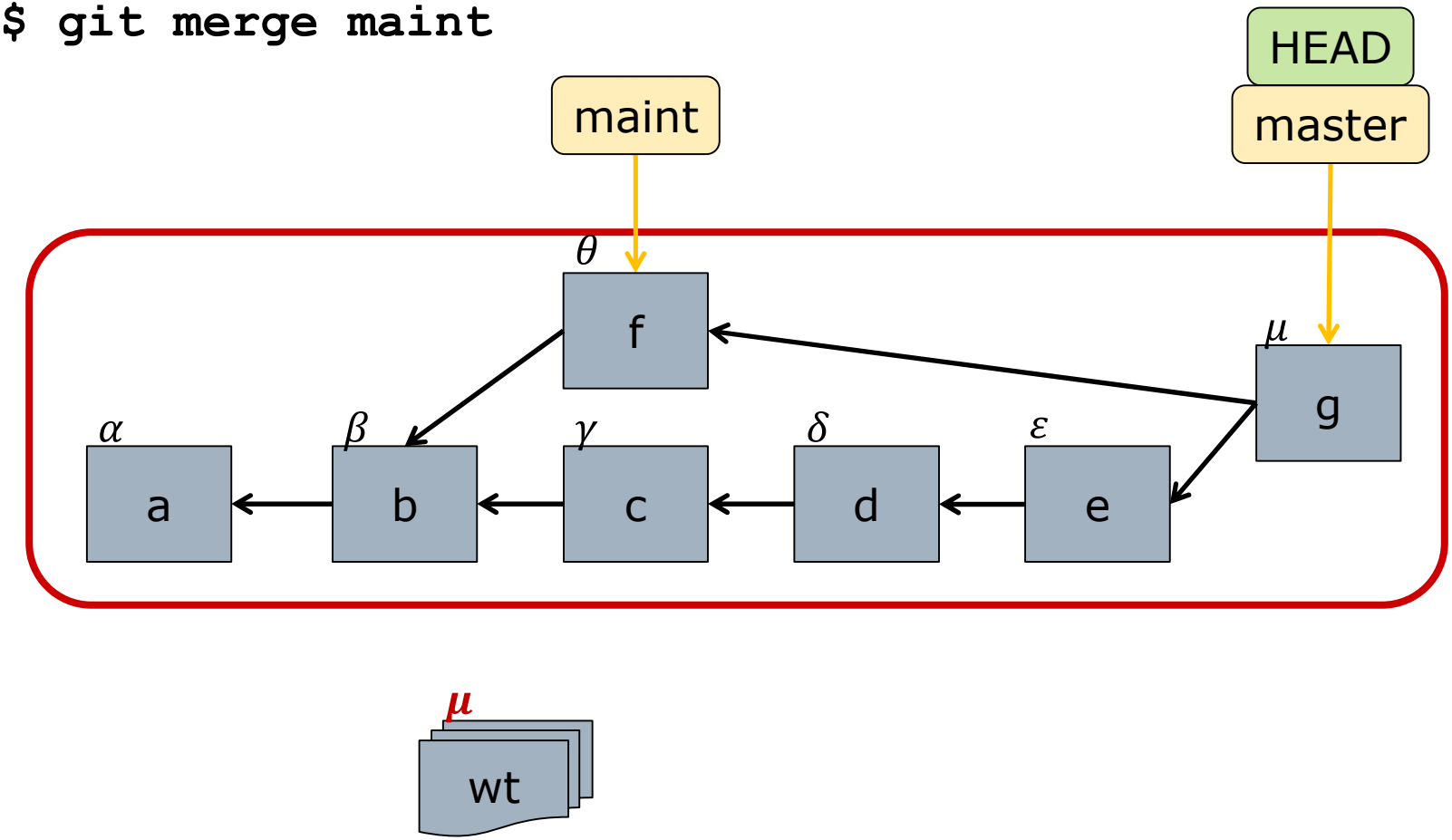

Merge – Case 3: Conflicts Exist


```
$ git merge maint
```

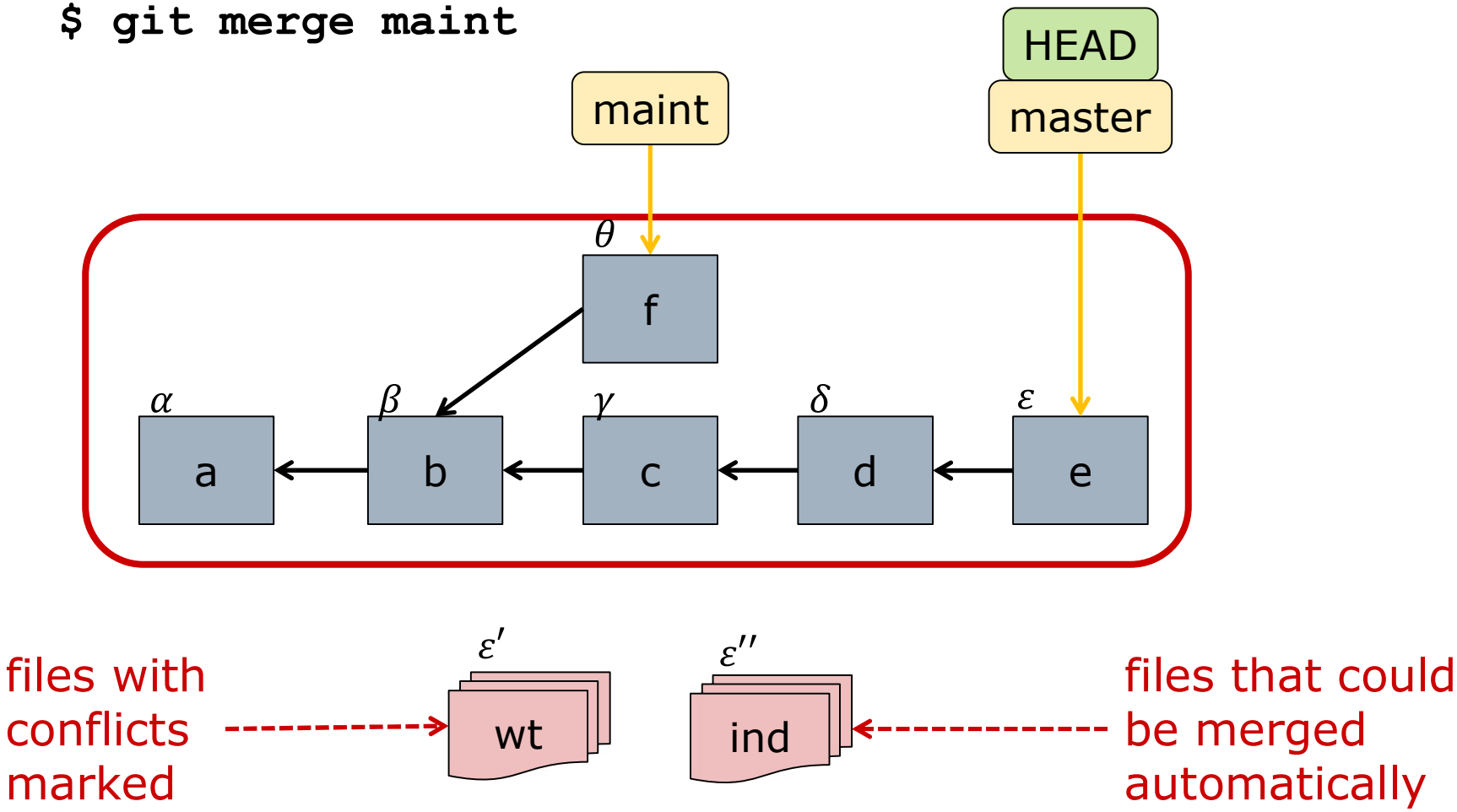

Merge: Resolve Conflicts


```
$ emacs somefile
```

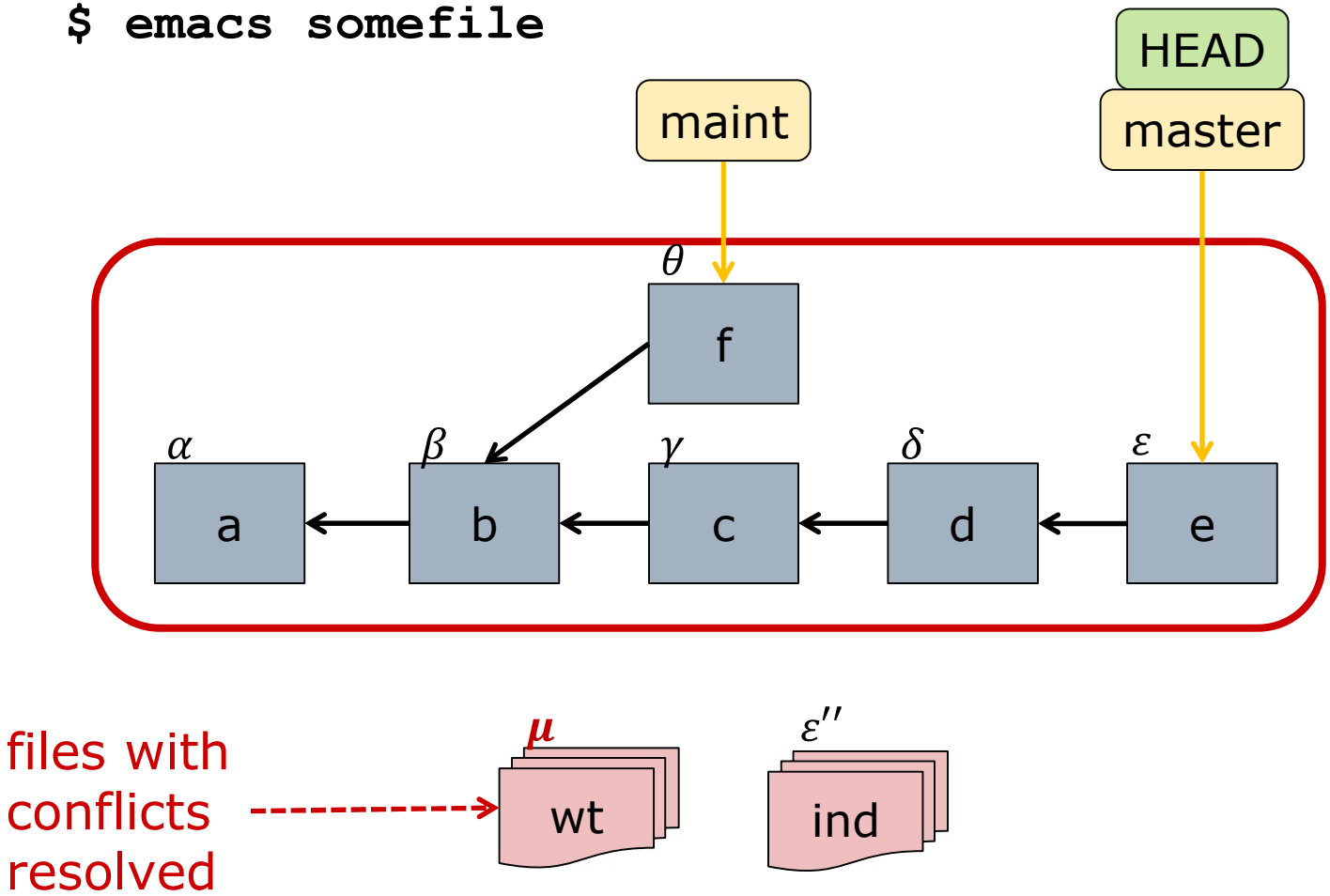

Merge with Conflicts: Add


```
$ git add somefile
```

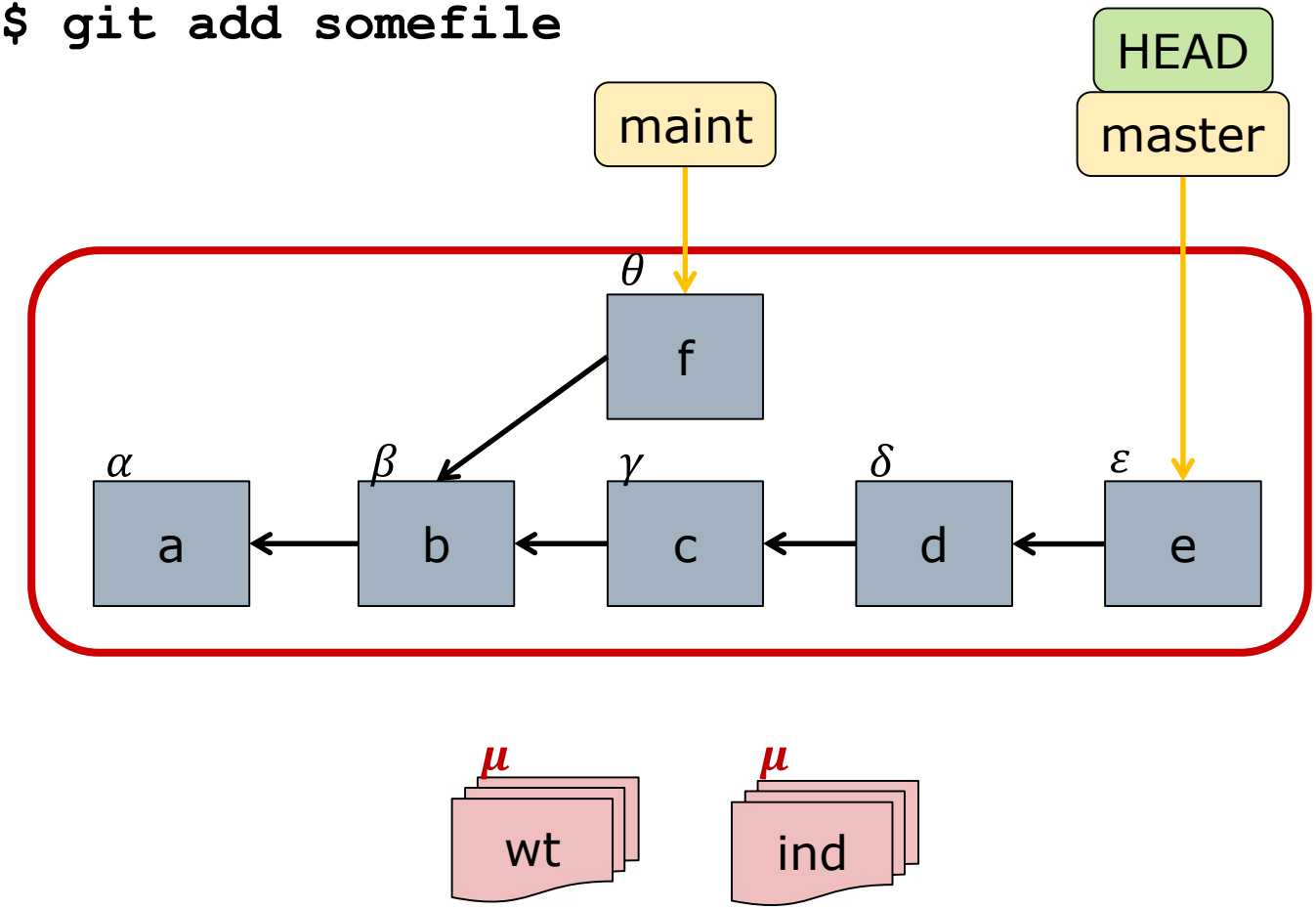

Merge with Conflicts: Commit


```
$ git commit
```

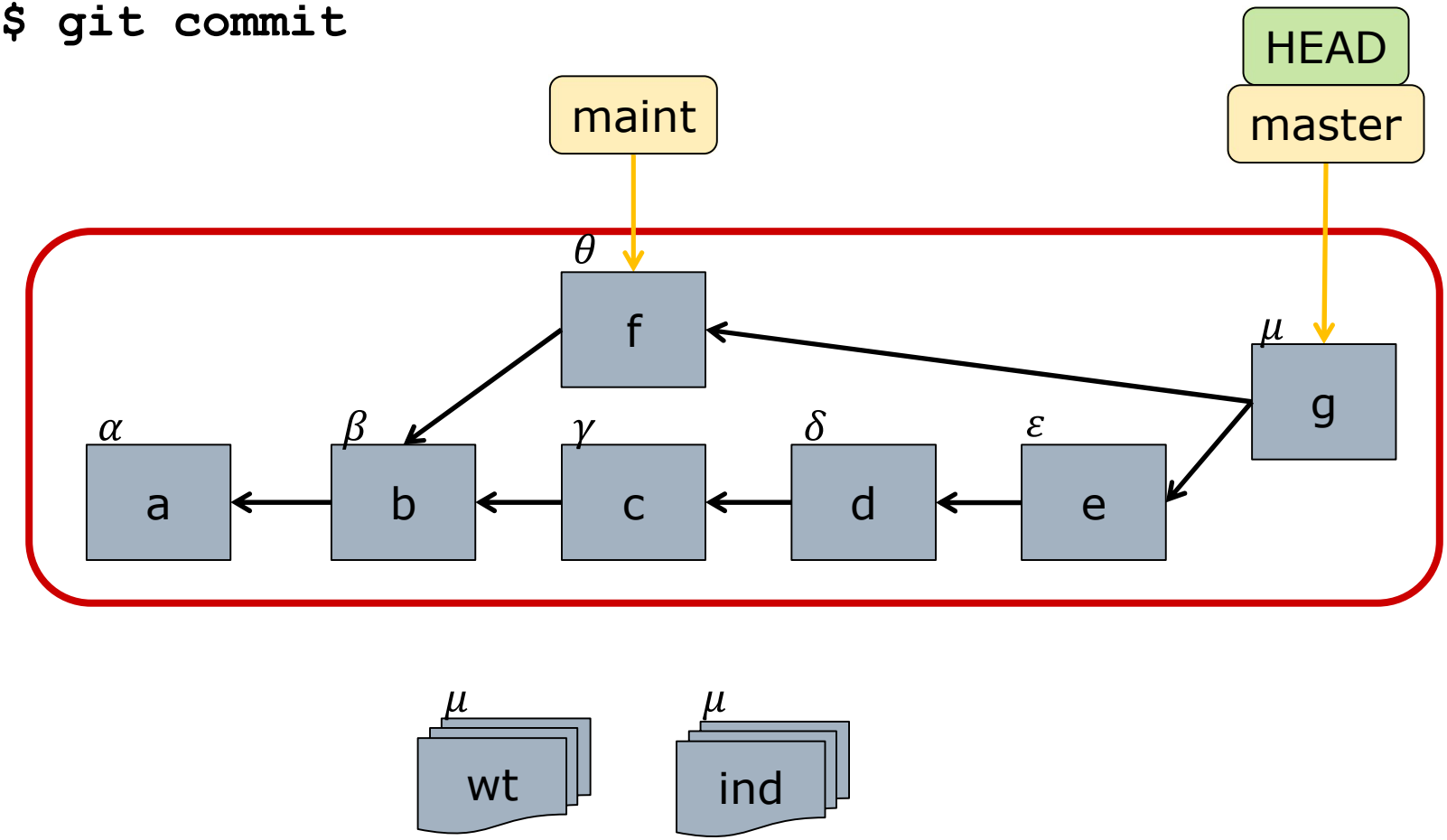

Summary

- Repository = working tree + store
  - Store contains history
  - History is a DAG of commits
  - References, tags, and HEAD
- Commit/checkout are local operations
  - Former changes store, latter working tree
- Merge
  - Directional (merge other “into” HEAD)