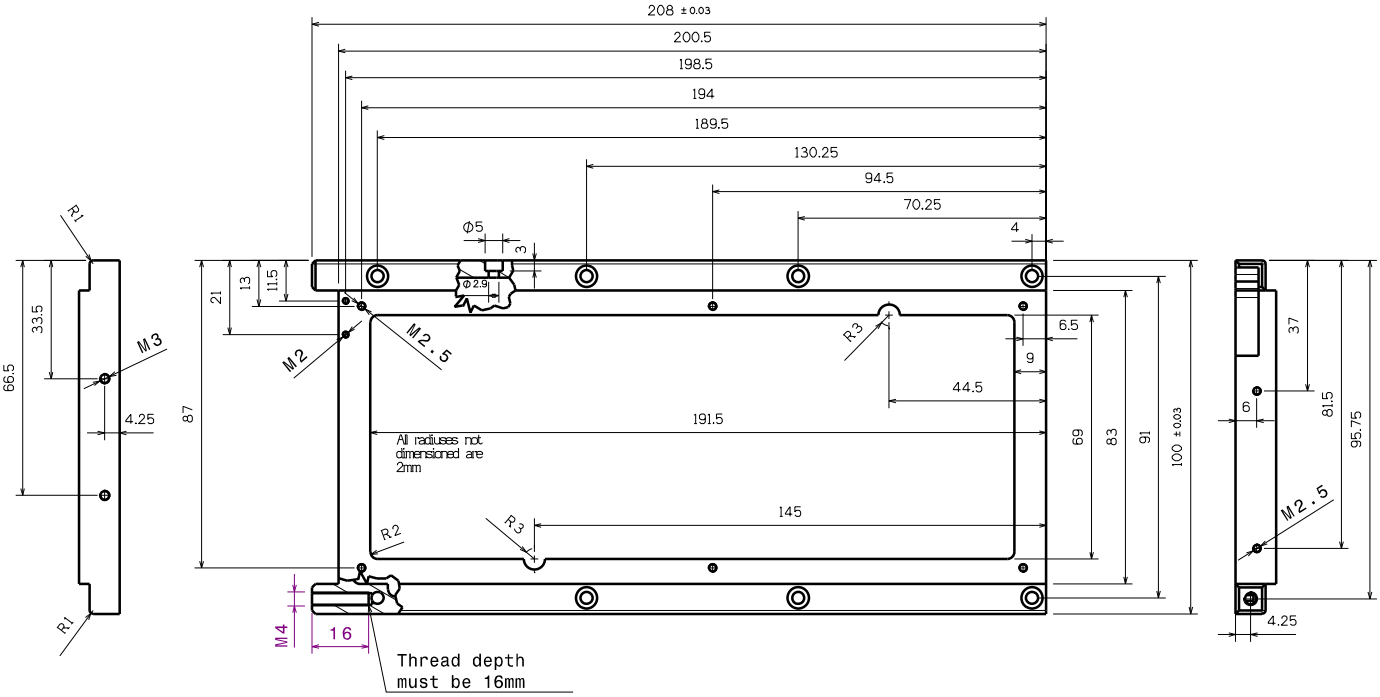

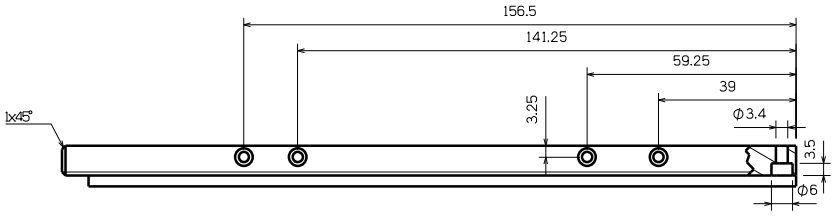

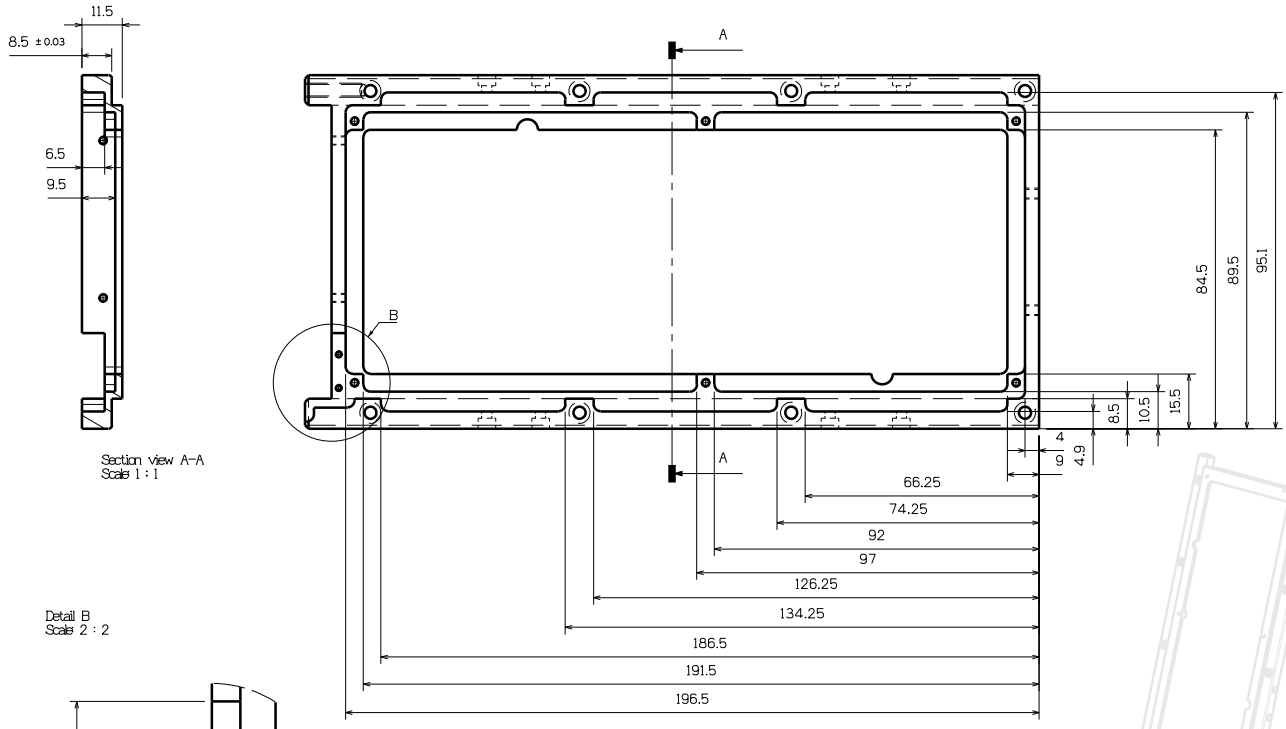

Section view A-A
Scale: 1 : 1

Detail B
Scale: 2 : 2

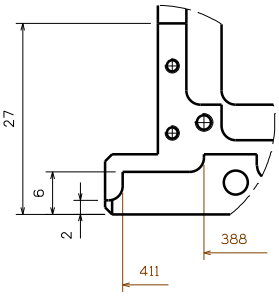

		2U cubesat structure	
DRAWN BY Y. Lammen	DATE 9/10/2010	DRAWING TITLE frame a	
CHECKED BY A. Scholz	DATE xxx	SIZE A2	DRAWING NUMBER LC21-02a	REV 1
DESIGNED BY A. Scholz	DATE xxx	SCALE 1:1	WEIGHT(kg) 0.00	SHEET 1/1