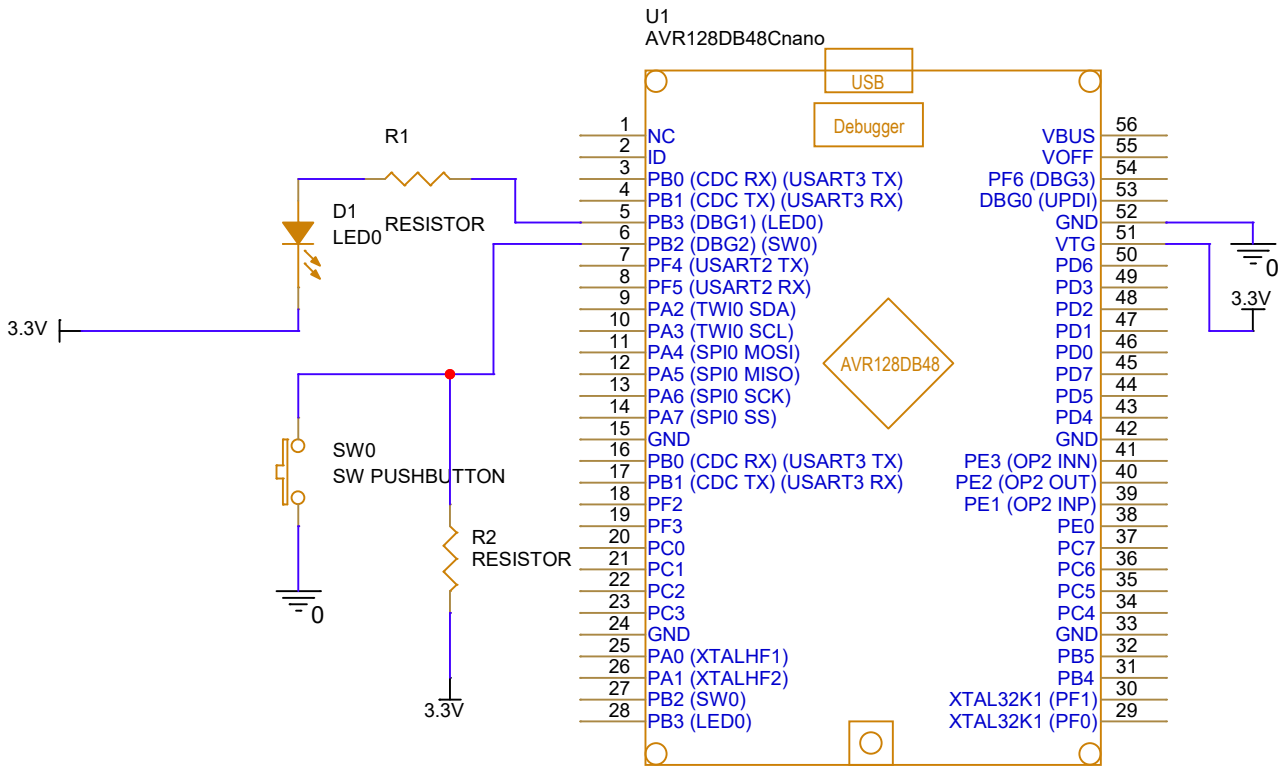

Title	Schemetic Drawing for Prelab3	
Size A	Document Number Dongyun Lee	Rev
Date: Wednesday, September 20, 2023	Sheet 1 of 1	