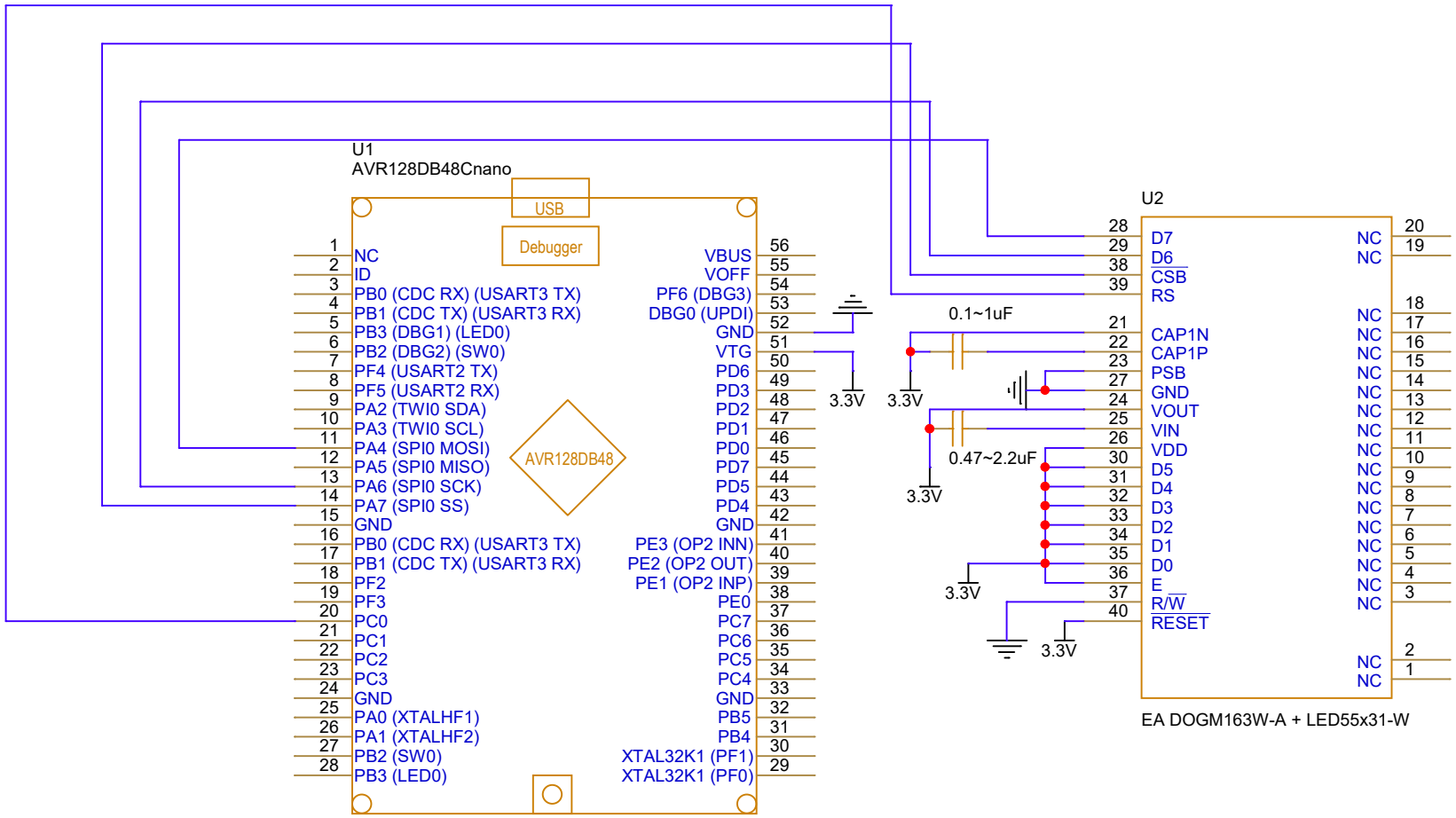

Title	Prelab7 Schematic Dongyun Lee	
Size A	Document Number Dongyun Lee	Rev <RevCo
Date: Wednesday, October 18, 2023	Sheet 1 of 1	