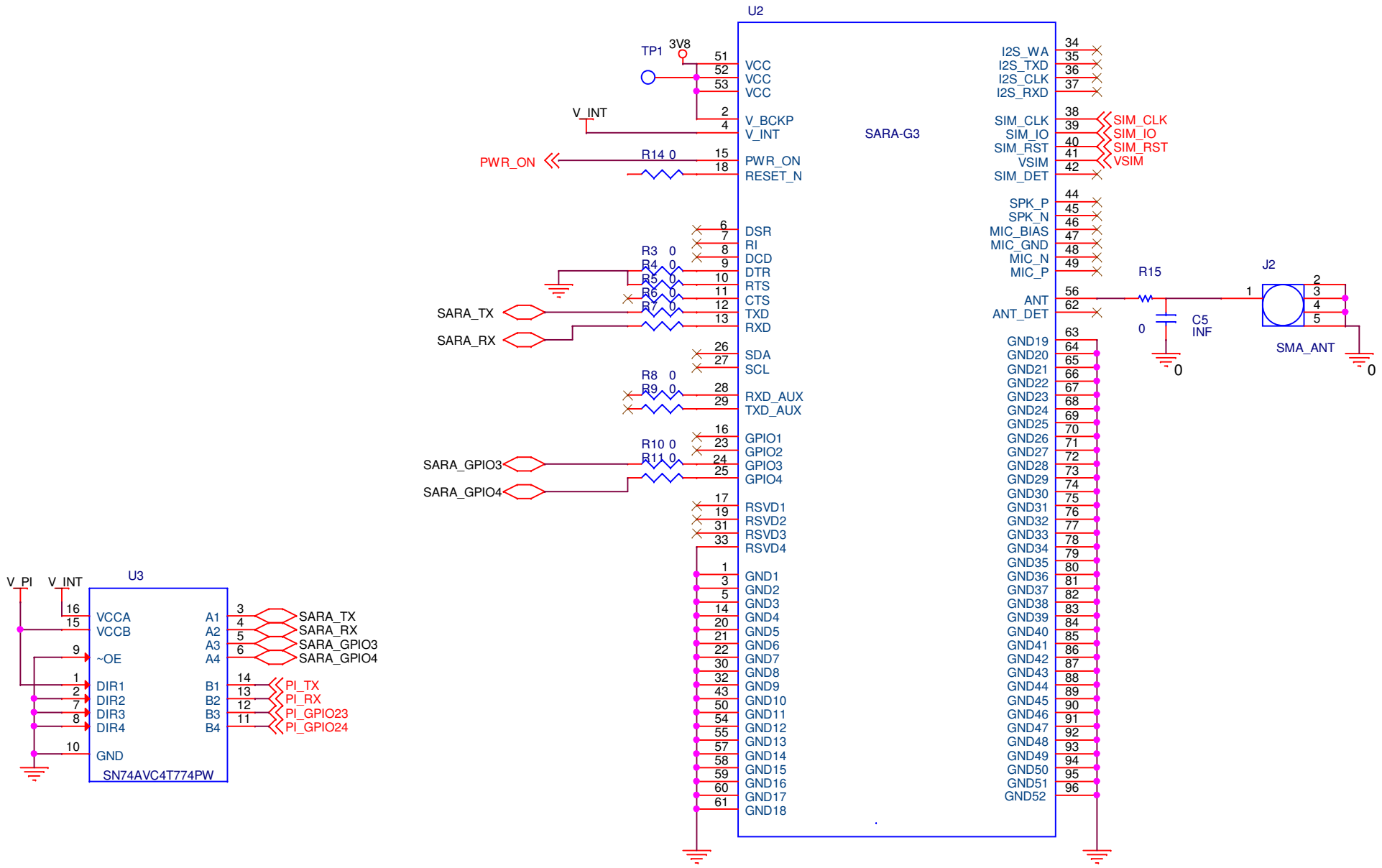

Title <Title>		
Size A4	Document Number <Doc>	Rev <Rev
Date: Sunday, February 16, 2020	Sheet 1 of 1	