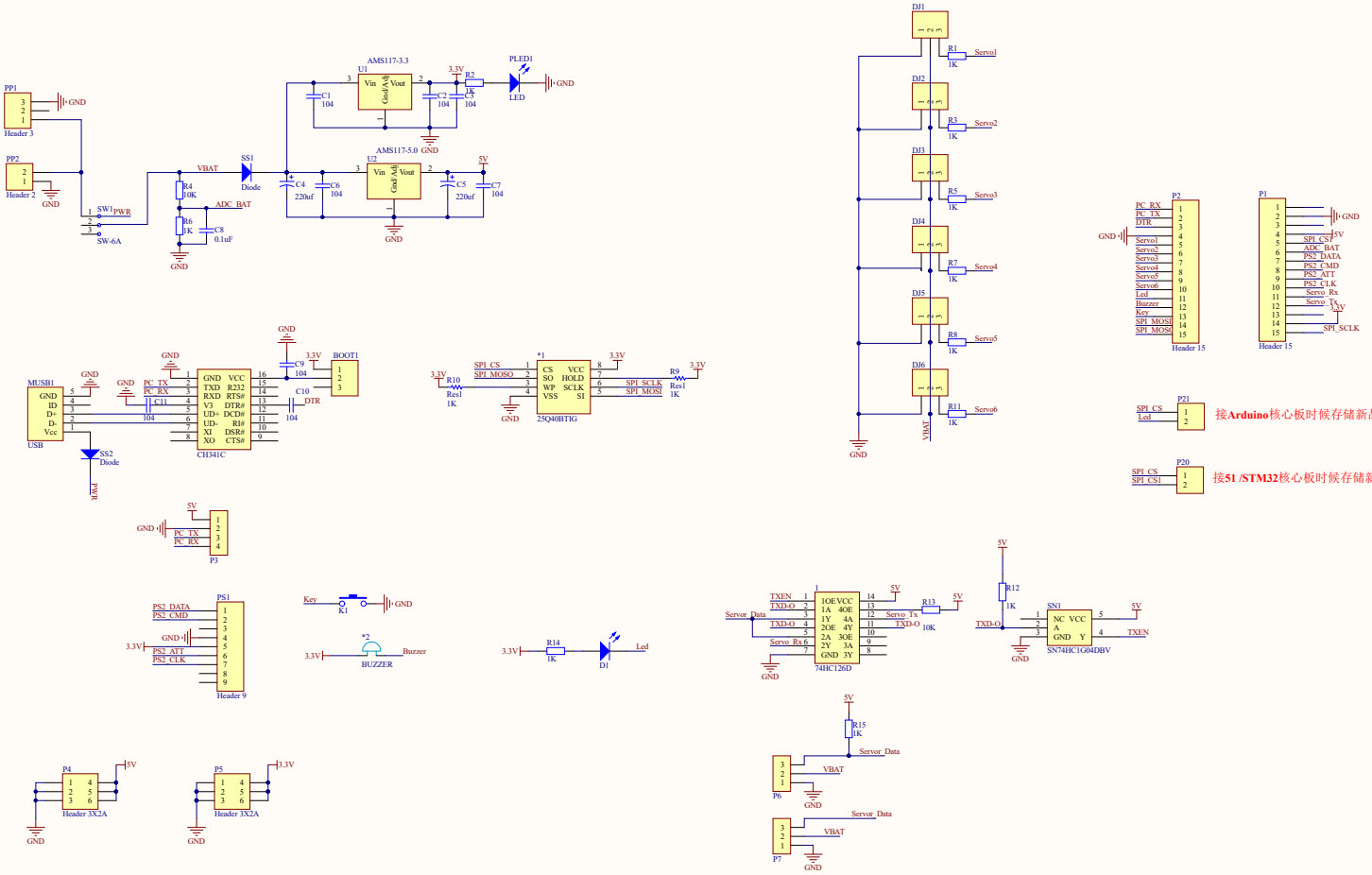

Title		
Size	Number	Revision
A2		
Date: 2018/2/28		Sheet of
File: G:\项目开发\4合一机械臂\底板\DB3.SchDoc		Drawn By: