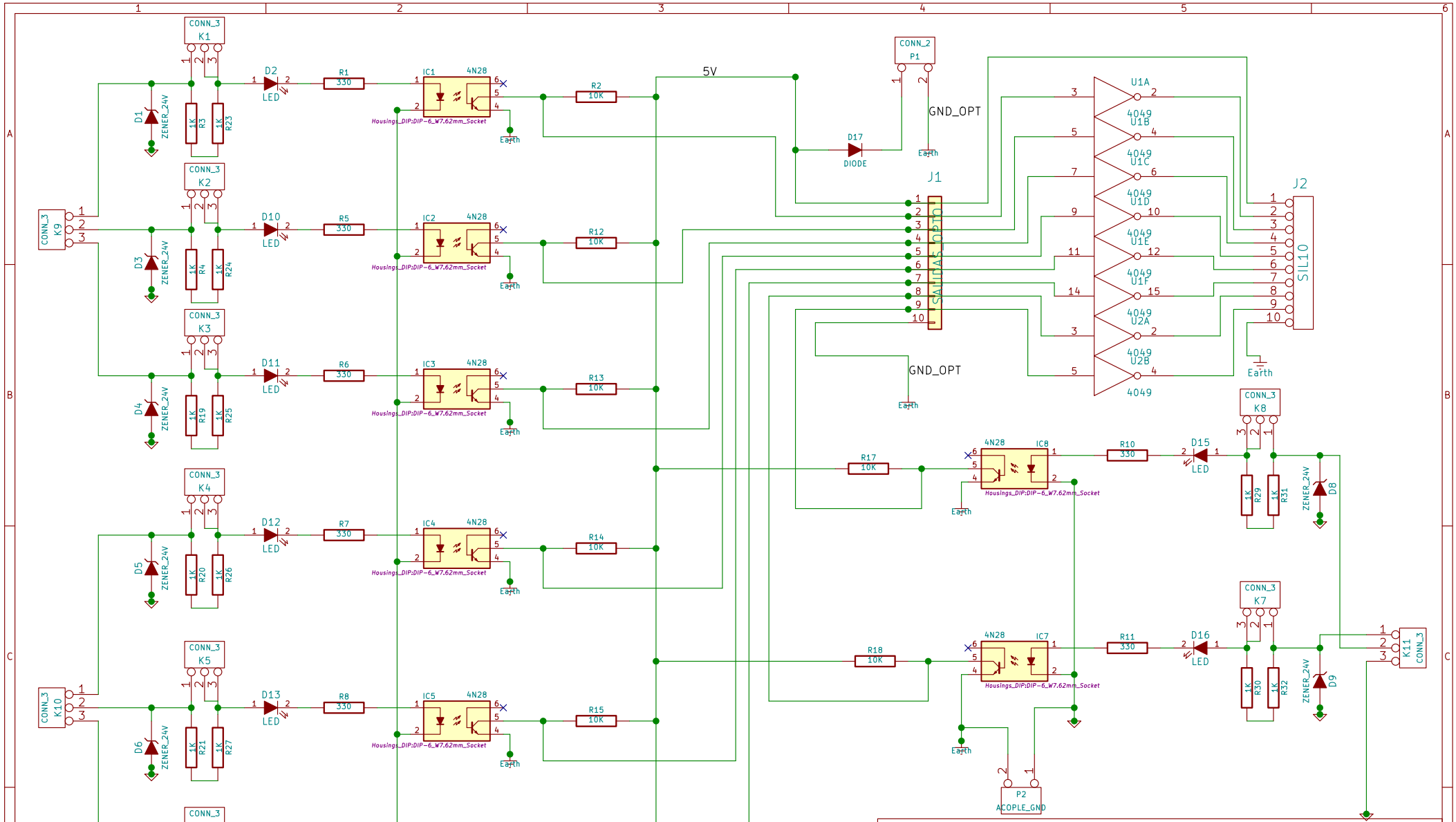

Sheet: /
File: entradas-plc.sch

Title:

Size: A4	Date: 1 apr 2018	Rev:
KiCad E.D.A. kicad 4.0.7-e2-637658ubuntu14.04.1		Id: 1/1