Boost Converter Project

ECE 2630 Fall 2022

By

Daniel Sarria

Joey Cohen

Andrew Vithoulkas

November 28, 2022

Contents

Introduction **2**

Analytical Solution **2**

Numerical Solution **8**

Experimental Procedures **10**

Results **12**

Conclusion **14**

List of Figures

Figure 1: *Boost Converter* **2**

Figure 2: *Multisim Circuit with Values* **8**

Figure 3: *Transient Graph of* V_{out} **9**

Figure 4: *Transient Graph of* V_{pwm} **9**

Figure 5: *PCB Layout in Ultiboard* **10**

Figure 6*: Experimental Circuit* **1**1

Figure 7: *Measurement of output voltage with PWM signal at 1kHz (*V_{out}*)* **1**2

Figure 8: *Measurement of PWM signal at 1kHz (*V_{pwm}*)* ***13***

Contributions

Daniel Sarria - Created the final PCB design used in the project, aided in soldering the final board, aided in experimental testing, wrote the conclusion, results, and aided in the overall report.

Andrew Vithoulkas - Aided in soldering the final PCB, helped with experimental testing, wrote the analytical solution, and aided in the overall report.

Joey Cohen - Aided in soldering and experimental testing, completed numerical solution, and aided in the overall completion of the report.

Introduction

A boost converter is a DC to DC converter that provides a greater output voltage than the voltage supply. Boost converters are often used when a fixed voltage source, such as a battery or low voltage power supply, cannot supply the voltage level required due to space or weight restrictions. The goal of this experiment is to design, build, and test a boost converter with a specific design. The boost converter design uses an inductor to store magnetic energy and then transfer that energy to a capacitor in short bursts of current with the use of a high-frequency pulse-width modulation (PWM) square-wave. The charged capacitor holds the output voltage nearly constant, while a diode prevents the capacitor from discharging back through the inductor and switching transistor. The frequency of the PWM signal is adjustable with the 10kΩ potentiometer, and is on the order of 1 kHz with a duty cycle between 50% and 80%. Additionally, the boost converter should be designed to provide 13V minimum within 0.3% across a load consisting of an LED in series with a 2.2kΩ resistor.

Analytical Solution

The following circuit was analyzed below:

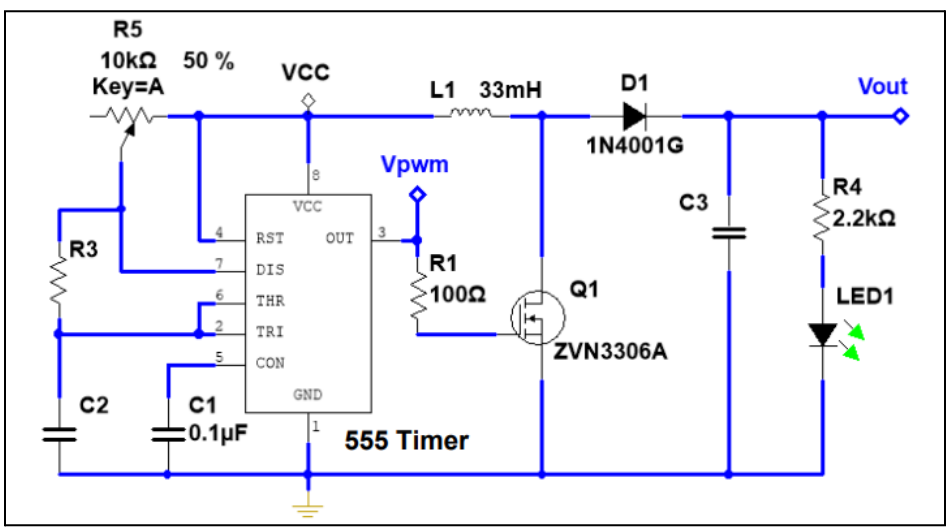

Figure 1: *Boost Converter*

<u>Calculation of Component Values</u>:

In order to calculate the value of R_3, first the known duty cycle of 50% was used to correlate the R_3 and R_5 values:

$$D = \frac{T_{on}}{T_{off}} = \frac{R_5+R_3}{R_5+2R_3} \text{ (Note: } R_5 = \ resistance\ of\ the\ potentiometer\text{)}$$

$$0.5 = \frac{R_3}{2R_3} \text{ (50\% Duty Cycle) (At 50\% duty cycle, } R_5 = 0\Omega\text{)}$$

The other known duty cycle of 80% was used to calculate R_3 value:

$$0.8 = \frac{10+R_3}{10+2R_3} \text{ (80\% Duty Cycle) (At 80\% duty cycle, } R_5 = 10k\Omega\text{)}$$

$$8 + 1.6R_3 = 10 + R_3$$

$$0.6R_3 = 2$$

$$R_3 = 3.33k\Omega$$

$$R_3 = 3.3k\Omega \text{ (Lab Kit Resistor)}$$

The value of R_5 was chosen so that the duty cycle (from the original equation) fit the duty cycle constraints of the circuit. R_5 is the resistance of the potentiometer, which ranges resistance values from 0 Ohms to 10 kOhms:

$$R_5 = 7.75k\Omega \text{ (Potentiometer Resistance)}$$

$$D = \frac{7.75+3.30}{7.75+2(3.30)}$$

$$D = 0.77 = 77\%$$

$$50\% < 77\% < 80\%$$

The value of C_2 was calculated using the known total cycle time from the frequency of the circuit:

$$T_{total} = 0.693(R_5 + 2R_3)C_2$$

$$T_{total} = \frac{1}{f} = \frac{1}{1000} = 0.001\ s$$

This value was used for how long the capacitor needs to cycle:

$$0.001 = 0.693(7.75 \times 10^3 + 2(3.30 \times 10^3))C_2$$

$$C_2 = 1.005 \times 10^{-7}\ F = 0.1\ \mu F$$

This value was in the lab kit, which is the capacitor that was used for C_2:

$$C_2 = 0.1\ \mu F \text{ (Lab Kit Capacitor)}$$

The value of C_3 was then calculated using a calculated total charge and voltage change over the capacitor:

$$13V - 2V = 11V \text{ (2V Drop on LED)}$$

The voltage drop over the capacitor was found, allowing the calculation of current through that wire to be found:

$$V = IR$$

$$11V = I \cdot R_4$$

$$11V = I \cdot 2200\Omega$$

$$I = 0.005A = 5mA$$

The total time of the capacitor with the originally generated duty cycle was calculated using the period of the circuit:

$$f = 1kHz$$

$$t = \frac{1}{f} = \frac{1}{1000}s = 1ms$$

$$t = 1ms \cdot 0.77 = 7.7 \cdot 10^{-4}s \text{ (Time on with Duty Cycle of 77\%)}$$

The calculation of total charge of the capacitor allows for the calculation of the capacitor value:

$$Q = It = (0.005A)(7.7 \cdot 10^{-4}s)$$

$$Q = 3.85 \cdot 10^{-6}C$$

The change in charge is the total charge minus the full output of zero charge from the capacitor, and the change in voltage is the goal output voltage within the 0.3% tolerance range:

$$C = \frac{\Delta Q}{\Delta V} = \frac{3.85 \cdot 10^{-6}C - 0C}{13V \cdot 0.003} = 9.871 \cdot 10^{-5}F = 98.71\mu F$$

$$C_3 = 100\mu F \text{ (Lab Kit Capacitor)}$$

The capacitor is large enough to fully support the minimum voltage of 13V, as this voltage was used in the calculation of the capacitor value.

<u>Calculation of Inductor Energy and Load Energy</u>:

To find the energy in the inductor, the terms of the current around the circuit were used to create a differential equation to solve for the current (i):

$$-V_{CC} + v_L + iR_L + v_{DS} = 0$$

$$v_L = L\frac{di}{dt}$$

$$\frac{L}{R_L}\frac{di}{dt} + i(t) = \frac{V_{CC} - v_{DS}}{R_L}$$

Then, a value for v_{DS} was determined so that all variables have values. This circuit is operating in the triode region, leading to the following equation with the following variables:

$$v_{DS} = (v_{GS} - V_t) + \frac{1}{R_D K_n} \pm \sqrt{\left[(v_{GS} - V_t) + \frac{1}{R_D K_n}\right]^2 - \frac{2V_{DD}}{R_D K_n}}$$

$$R_D = R_L \text{ (Inductor Resistance)}$$

$$R_L = 51.6\,\Omega \text{ (Measured using Multimeter)}$$

$$V_{DD} = V_{CC} = 5V$$

$$V_t = 1.824V \text{ (Threshold Voltage)}$$

$$K_n = 0.1233\frac{A}{V^2} \text{ (MOSFET transconductance parameter)}$$

$$V_{GS} = 5V \text{ (Gate Source Voltage)}$$

Plugging in the values results in:

$$v_{DS} = (5 - 1.824) + \frac{1}{51.6\times0.1233} \pm \sqrt{\left[(5 - 1.824) + \frac{1}{51.6\times0.1233}\right]^2 - \frac{2\times5}{51.6\times0.1233}}$$

$$V_{DS} = 0.24\,V \text{ (Cannot have a voltage drop across the drain greater than 5 V)}$$

Plugging in to the differential equation results in a first order differential equation:

$$\frac{L}{R_L}\frac{di}{dt} + i(t) = \frac{V_{CC} - v_{DS}}{R_L}$$

$$i(t) = K_1 + K_2 e^{st}$$

$$\frac{di(t)}{dt} = sK_2 e^{st}$$

Conforming these leads to our first order differential equation:

$$\left(\frac{L}{R_L} sK_2 e^{st}\right) + \left(K_1 + K_2 e^{st}\right) = \frac{V_{CC} - v_{DS}}{R_L}$$

Which, when simplified, leads to:

$$K_1 + \left(K_2 + s\frac{L}{R_L}K_2\right)e^{st} = \frac{V_{CC} - v_{DS}}{R_L}$$

Solving for s in the middle term:

$$\left(K_2 + s\frac{L}{R_L}K_2\right) = 0$$

$$s = \frac{-R_L}{L}$$

$$\tau = \frac{L}{R_L}$$

It is known that the exponential term is 0 now:

$$K_1 = \frac{V_{CC} - v_{DS}}{R_L}$$

$$K_1 = \frac{5-0.24}{51.6}$$

$$K_1 = 0.092A$$

Now, K_2 can be solved for using initial conditions:

$$i(t) = 0.092 + K_2 e^{-t/\tau}$$

$$i(0^+) = 0 = 0.092 + K_2 e^0$$

$$0 = 0.092 + K_2$$

$$K_2 = -0.092$$

Therefore, the first order equation for the current through the inductor can be found:

$$i(t) = 0.092 - 0.092e^{-t/\tau}$$

$$\tau = \frac{L}{R_L} = \frac{33\times10^{-3}}{51.6} = 0.64ms$$

$$i(t) = 0.092 - 0.092e^{-t/0.00064}$$

$$i(t) = 0.092 - 0.092e^{-1562.5t}$$

To find the energy of the inductor, the voltage through the inductor is calculated:

$$V_L = L\frac{di(t)}{dt}$$

$$\frac{di(t)}{dt} = \frac{575e^{-1562.5t}}{4}$$

$$V_L = (33 \times 10^{-3})(143.75e^{-1562.5t})$$

$$V_L = 4.74375e^{-1562.5t}$$

Then, the the power is calculated using known voltage across the inductor and current through it:

$$P_L = V_L\, i(t)$$

$$P_L = \left(4.74375e^{-1562.5t}\right)\left(0.092 - 0.092e^{-1562.5t}\right)$$

Power is integrated to find energy from the inductor over the time on period:

$$\int_0^{0.77ms} \left(4.74375e^{-1562.5t}\right)\left(0.092 - 0.092e^{-1562.5t}\right)di$$

$$W_L = 0.0000684J$$

$$W_L = 68.4\ \mu J$$

Calculating energy across the load, current through the load must be found:

$$V = IR$$

$$V = 13V - 2V$$

$$11V = I * (2200\Omega)$$

$$I = 0.005A$$

Power of the load can now be calculated:

$$P = VI$$

$$P = (11V)(0.005A)$$

$$P = 0.055W$$

Energy can be calculated from the load's power:

$$W = P * t$$

A time period of 1ms can be calculated from a 1kHz frequency:

$$W = 0.055W * 0.001s$$

Which then leaves with the energy consumption of the resistor:

$$W = 5.5 \times 10^{-5}J$$

The LED's power is then calculated using the same equation as above:

$$P = 2V * 0.005A$$

$$P = 0.01W$$

Using the LED's power, the energy of the LED can finally be calculated:

$$W = P * t$$

$$W = 0.01W * 0.001s$$

$$W = 1 \times 10^{-5}J$$

Adding these together, the total energy absorbed across the load can be found:

$$5.5 \times 10^{-5}J + 1 \times 10^{-5}J = 6.5 \times 10^{-5}J = 65\ \mu J$$

Comparing this to our inductor energy:

$$68.4\ \mu J > 65\ \mu J$$

$$W_L > W_{load}$$

This means the inductor in the circuit can supply enough energy needed by the load to support a 13V output boosted from a 5V input. Essentially, the inductor is large enough to supply more energy than the load uses.

Numerical Solution

Using the circuit from Figure 1, the values of the capacitor, inductor, and resistors that were analytically derived were inputted into their respective components in Multisim. The resulting Multisim circuit of the boost converter is below:

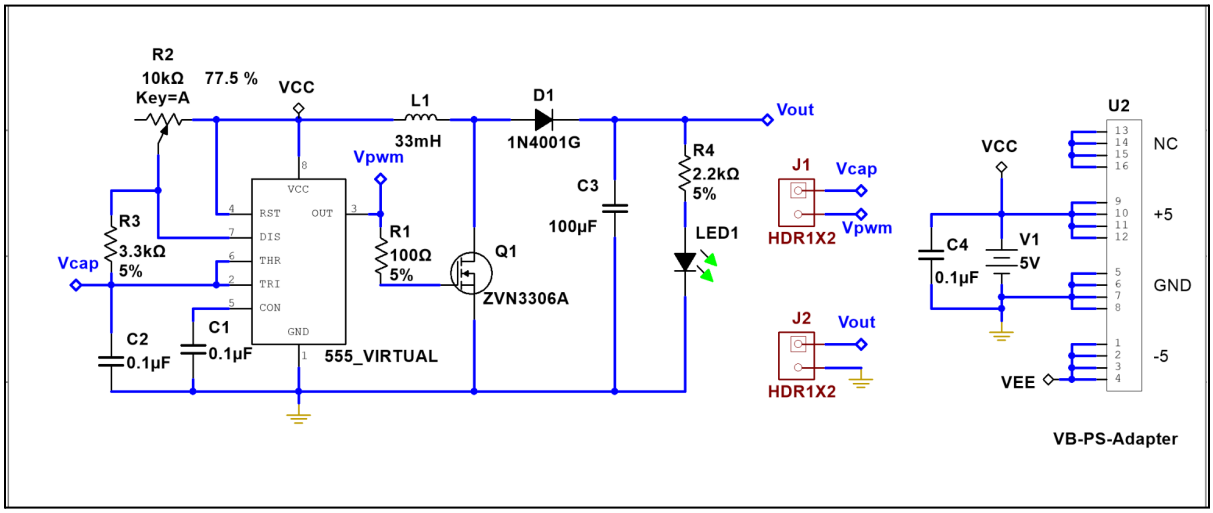

Figure 2: *Multisim Circuit with Values*

The circuit schematic also contains fixed parts. The VB-PS Adapter is merely a placeholder for the header pins that will connect the PCB to the breadboard in the experimental setup. J1 and J2 are jumpers for the PCB as well.

To verify our analytical results numerically, the transient analysis tool in Multisim was used to create a graph of the voltage over time. The voltage output of the boost converter was graphed over 1 second. The cursor tools were then utilized to find the value of the voltage peak. The resulting transient graph is below:

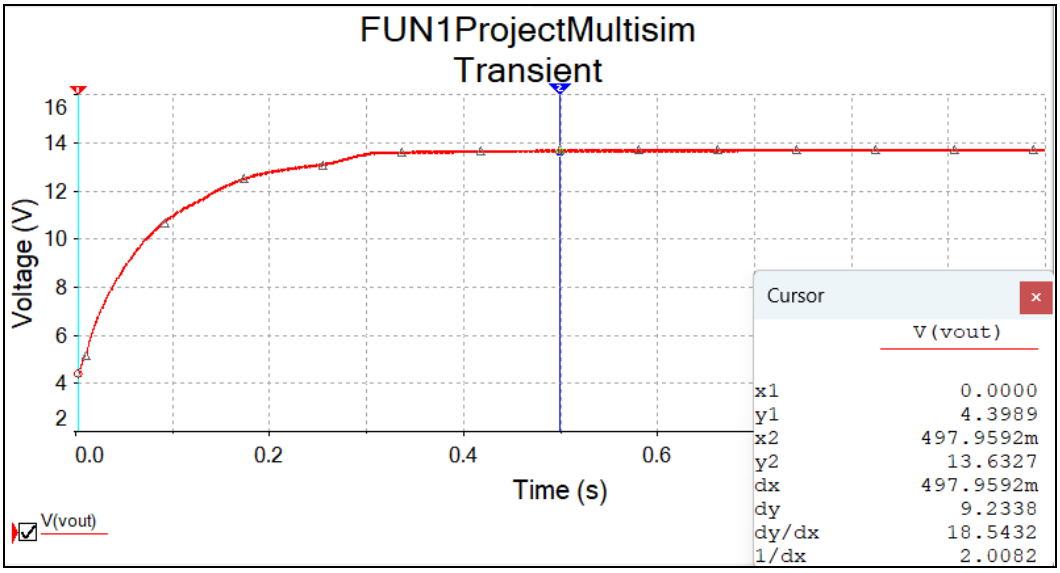

Figure 3: *Transient Graph of* V_{out}

$Voltage\ output \ = \ 13.6327\ V$

$13\ V$ minimum requirement

$13\ V \ < \ 13.6327\ V$

Additionally, to verify PWM signal at 1 kHz, the transient analysis tool in Multisim was used to create a square wave graph of the voltage over time. The voltage output of the PWM signal was graphed over 5 milliseconds. The cursor tools were then utilized to find the frequency of the signal. The resulting square wave is below:

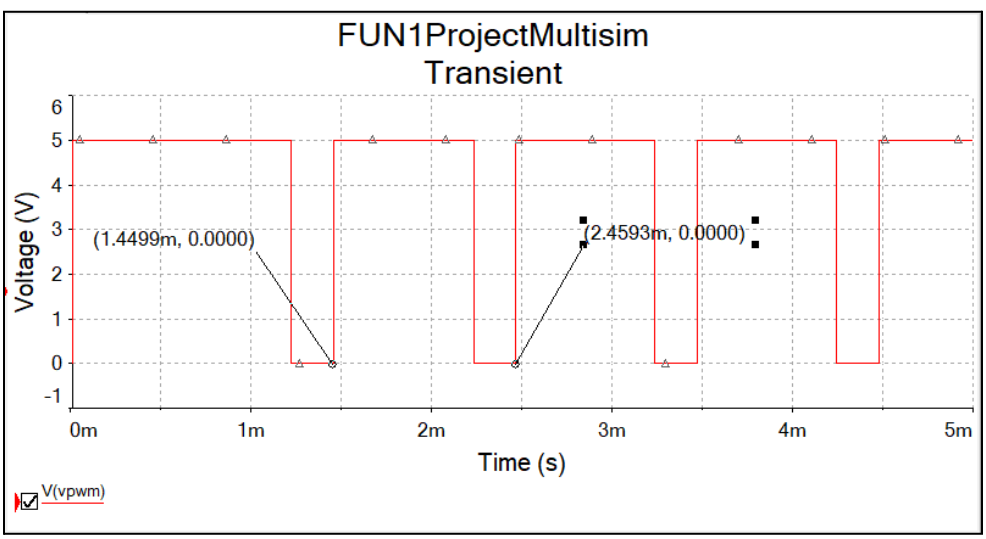

Figure 4: *Transient Graph of* V_{pwm}

$T = 2.4593 - 1.4499 = 1.0094\,ms \approx 1ms$

$f = \frac{1}{T} = \frac{1}{1\times10^{-3}} = 1000\,Hz = 1kHz$

Experimental Procedures

In order to verify the theoretical values, the circuit shown in Figure 2 was constructed using a PCB that was designed in Ultiboard and manufactured with a silkscreen layer, a copper bottom layer, and a copper top layer. The components were arranged so that none of the traces intersected and the traces that cut through the ground plane were kept to a minimum. All traces were located on either the copper bottom or copper top layers. All component names and values were labeled on the PCB layout according to the Multisim circuit. The PCB layout in Ultiboard is displayed below:

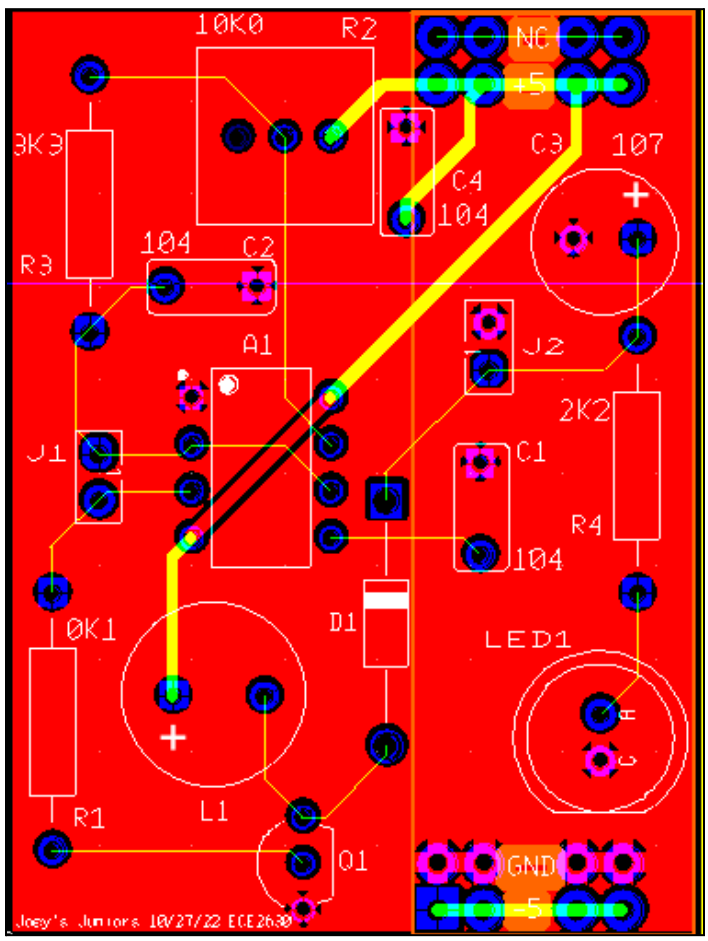

Figure 5: *PCB Layout in Ultiboard*

After the PCB was manufactured using the layout above, circuit components were soldered onto the board to ensure all pieces were semi-permanently wired in place. We tested the completed PCB on a breadboard, which was attached to an Analog Discovery 2 power supply. Jumpers that were soldered into the board

were used as voltage reference points, where output voltage as well as the PWM signal could be accurately measured using the Waveform software. The signal and output voltage were read using an oscilloscope to produce final graphs to prove the correct output voltage of at least 13V (see Results section). The experimental circuit is below:

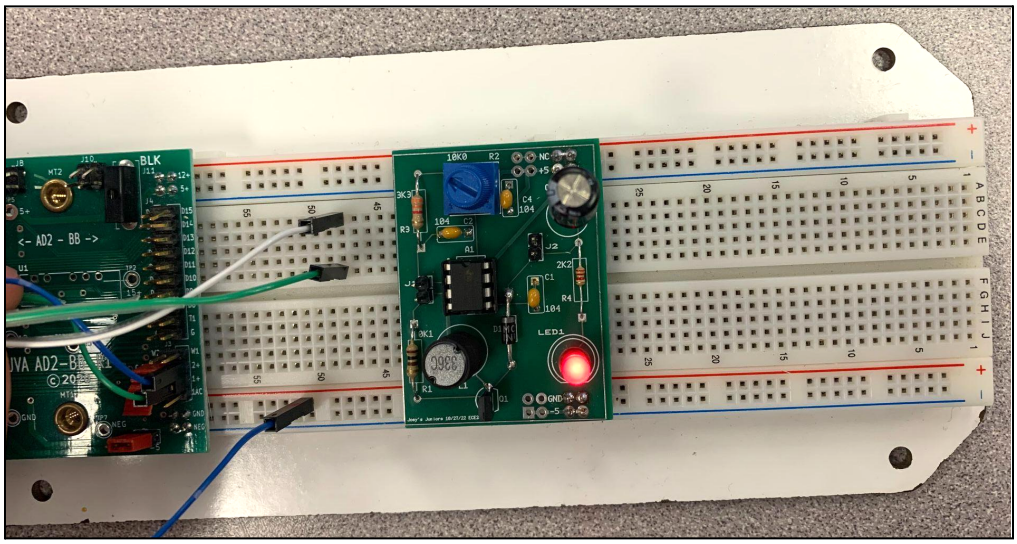

Figure 6*: Experimental Circuit*

Results

The experimental graph of the voltage output of the boost converter was plotted on Waveform, with channel 1 acting as the voltage output and channel 2 acting as the ground:

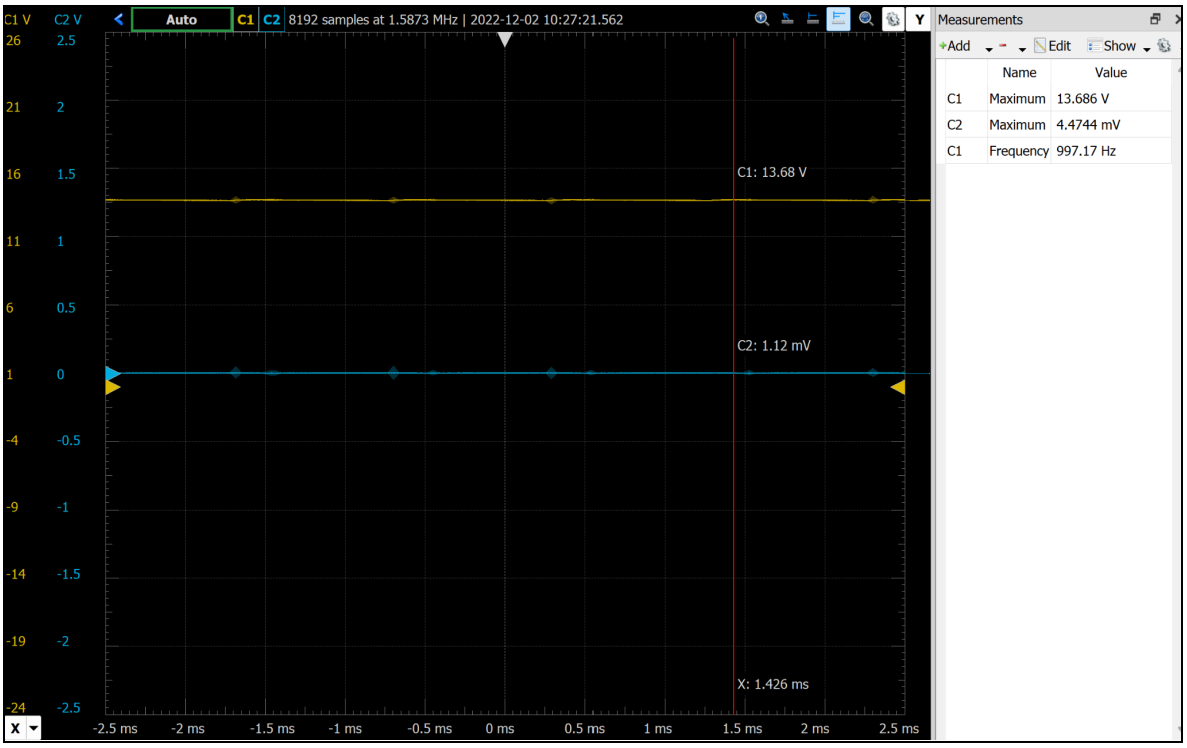

Figure 7: *Measurement of output voltage with PWM signal at 1kHz (V_{out})*

$C_1\ Voltage\ =\ 13.686\ V$

$C_1\ Frequency\ =\ 997.17\ Hz$

The percent error of the output voltage of the experimental and numerical results were calculated using the following equation:

$$\%\ Error\ =\ \left|\frac{V_{experimental} - V_{numerical}}{V_{numerical}}\right| \times 100$$

$$\%\ Error\ =\ \left|\frac{13.686 - 13.6327}{13.6327}\right| \times 100\ =\ 0.391\% \approx 0.4\%$$

As can be seen above, the experimental results are within the error bounds of the numerical results. In fact, the percent error of the experimental voltage output only has a 0.4% error in comparison to the

numerical voltage output. This indicates that our experimental results are accurate and that our experimental design was effective.

Additionally, the experimental graph of the PWM signal at 1 kHz was plotted on Waveform, with channel 1 acting as the PWM voltage output of the 555 timer and channel 2 acting as the ground:

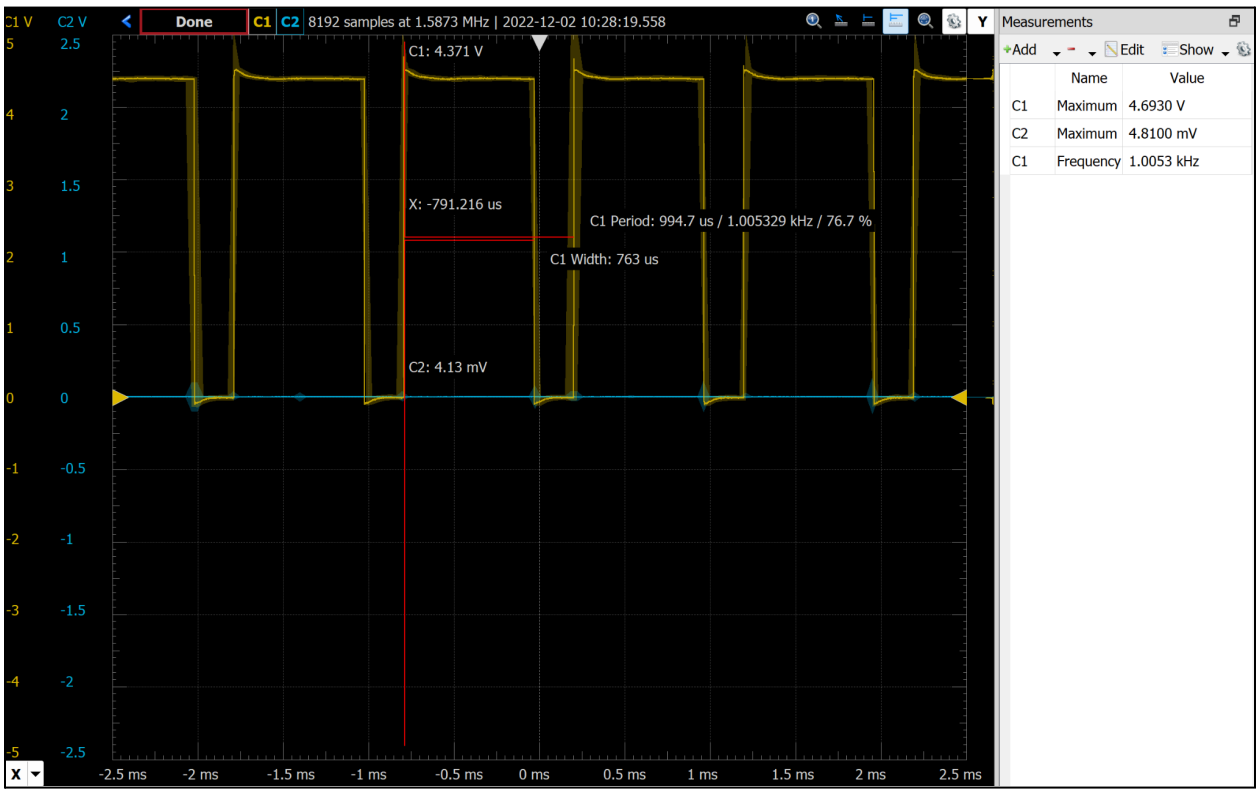

Figure 8: *Measurement of PWM signal at 1kHz (V_{pwm})*

$C_1\ Voltage\ =\ 4.69\ V$

$C_1\ Frequency\ =\ 1.0053\ kHz$

$C_1\ Period\ =\ 994.7\ \mu s\ =\ 0.9947\ ms$

The percent error of the PWM frequency of the experimental and numerical results were calculated:

$$\%\ Error\ =\ \left|\frac{1.00053-1}{1}\right| \times 100\ =\ 0.053\%$$

Also, the percent error of the PWM period of the experimental and numerical results were calculated:

$$\%\ Error\ =\ \left|\frac{0.9947-1}{1}\right| \times 100\ =\ 0.53\%$$

As can be seen above, the experimental results are within the error bounds of the numerical results. In fact, the percent error of the experimental PWM voltage output only has a 0.053% error in comparison to the numerical PWM voltage output. Also, the percent error of the PWM period only has a 0.53% error in comparison to the numerical PWM period. Again, this indicates that our experimental results are accurate and that our experimental design was effective.

Conclusion

The experimental results agreed with the numerical results, indicating that our analytical results were accurate for the most part. However, the experimental results did produce a minimal percent error in comparison with the numerical results, meaning that there was a presence of error within the experiment.

The experimental results produced a small percent error with the numerical results in both the voltage output and the PWM signal due to multiple experimental discrepancies. For instance, the 555 timer does not output exactly 5V because the timer has a 20% tolerance. As a result, the voltage output of the PWM does not create a square wave with a 5V amplitude. According to figure 8, the voltage amplitude of the square wave was approximately 4.69V, which is within 20% tolerance of the 555 timer. Additionally, the small error of the experimental voltage output could be attributed to the design of the PCB. For instance, there are traces that are running parallel to each other on the PCB which results in noise, creating parasitic capacitance. Also, while we attempted to keep traces that cut through the ground plane to a minimum, we had to cut through the ground plane once on the PCB to avoid overlapping traces, minimally preventing current flow. Lastly, the soldering of the components was not perfect. There were multiple cases where the solder did not join properly with the PCB and the components. Similarly, some components may have received too little solder, which results in a weak joint connecting the component with the PCB. Nevertheless, our experimental results are very reasonable due to the small percent error, which gives us confidence that our design values are correct, and that our overall PCB design met the requirements of the boost converter.