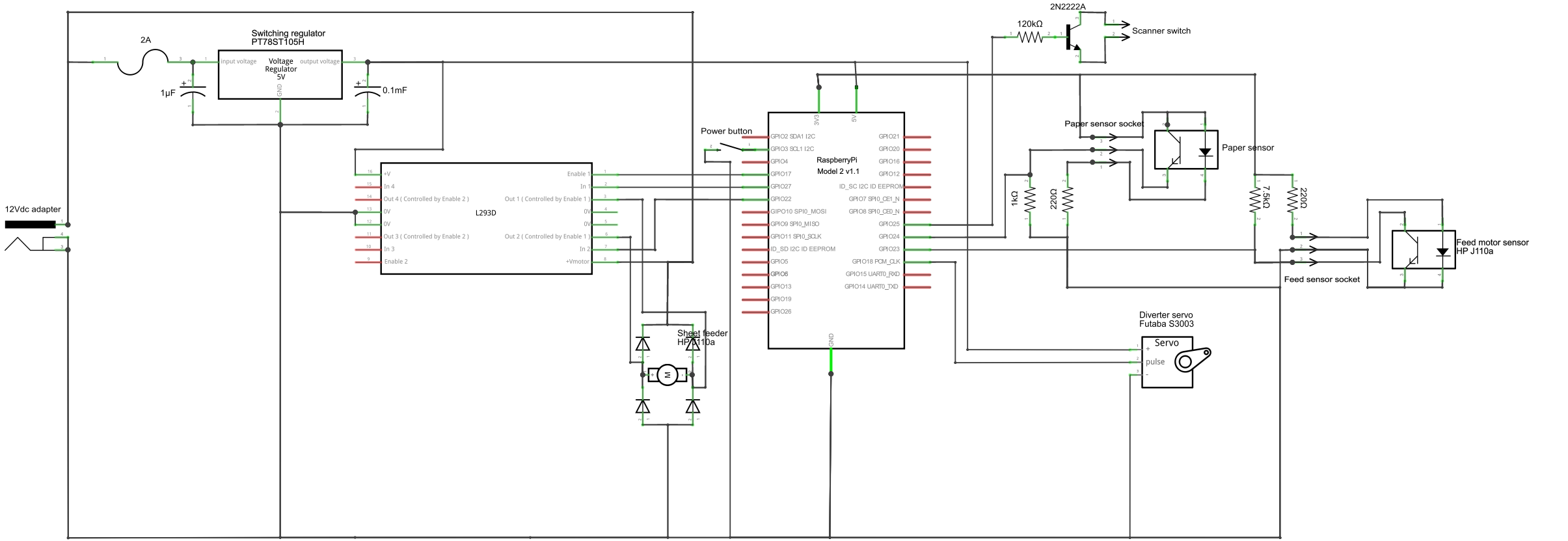
2A
Switching regulator
PT78ST105H
Input voltage
Voltage
Regulator
5V
output voltage
GND
1µF
0.1mF
12Vdc adapter
L293D
+V
In 4
Out 4 (Controlled by Enable 2)
0V
0V
Out 3 (Controlled by Enable 2)
In 3
Enable 2
Enable 1
In 1
Out 1 (Controlled by Enable 1)
0V
0V
Out 2 (Controlled by Enable 1)
In 2
+Vmotor
Sheet feeder
HP J110a
M
Power button
RaspberryPi
Model 2 v1.1
3V3
5V
GND
GPIO2 SDA1 I2C
GPIO3 SCL1 I2C
GPIO4
GPIO17
GPIO27
GPIO22
GIPO10 SPI0_MOSI
GPIO9 SPI0_MISO
GPIO11 SPI0_SCLK
ID_SD I2C ID EEPROM
GPIO5
GPIO6
GPIO13
GPIO19
GPIO26
GPIO21
GPIO20
GPIO16
GPIO12
ID_SC I2C ID EEPROM
GPIO7 SPI0_CE1_N
GPIO8 SPI0_CE0_N
GPIO25
GPIO24
GPIO23
GPIO18 PCM_CLK
GPIO15 UART0_RXD
GPIO14 UART0_TXD
2N2222A
120kΩ
Scanner switch
Paper sensor socket
Paper sensor
1kΩ
220Ω
7.5kΩ
220Ω
Feed motor sensor
HP J110a
Feed sensor socket
Diverter servo
Futaba S3003
Servo
pulse
+
-
fritzing