video

File: esp.kicad_sch

ISA

File: ISA.kicad_sch

CardSelect

File: CardSelect.kicad_sch

audio

File: audio.kicad_sch

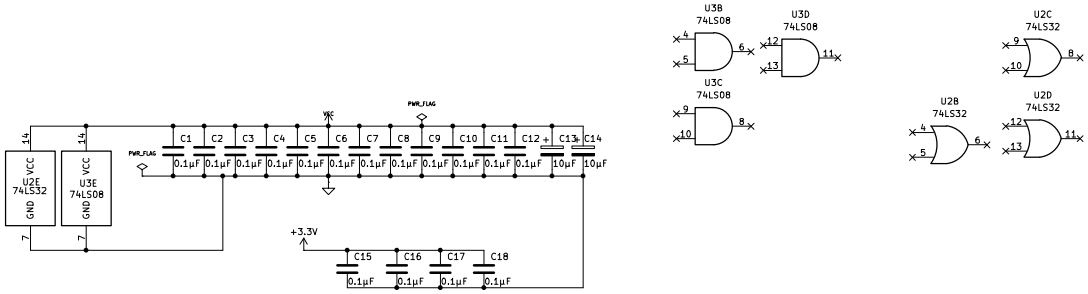

Sheet: /
File: video.kicad_sch

Title: ISA VIDEO/SID

Size: USLedger	Date: 2026-01-31	Rev: V1.1
KiCad E.D.A. 9.0.2		Id: 1/5

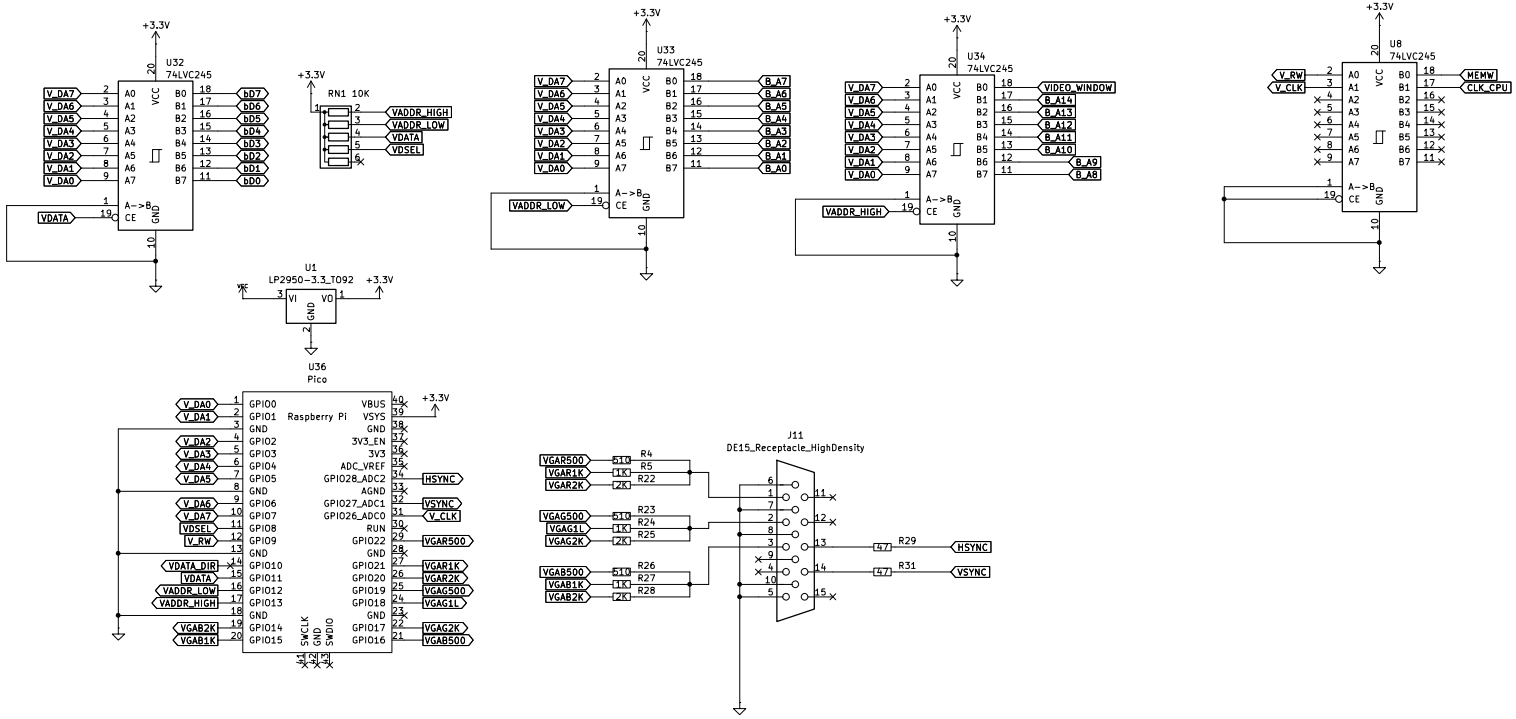

Sheet: /video/
File: esp.kicad_sch

Title: ISA VIDEO/SID

Size: USLedger	Date: 2026-01-31	Rev: V1.1
KiCad E.D.A. 9.0.2		Id: 2/5

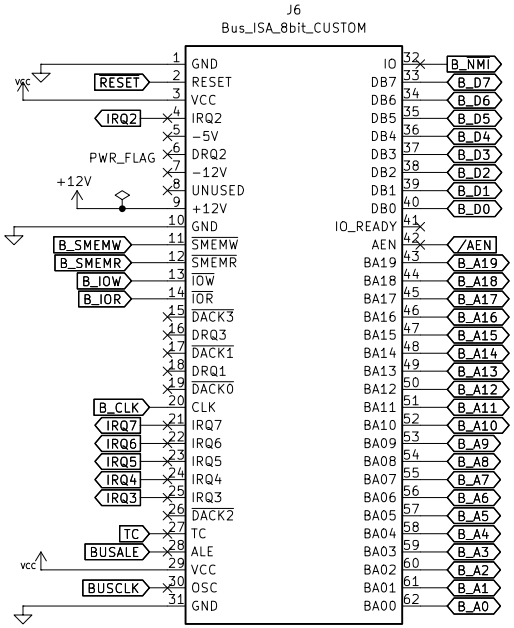

Sheet: /ISA/
File: ISA.kicad_sch

Title: ISA VIDEO/SID

Size: A4	Date: 2026-01-31	**Rev: V1.1**
KiCad E.D.A. 9.0.2		Id: 3/5

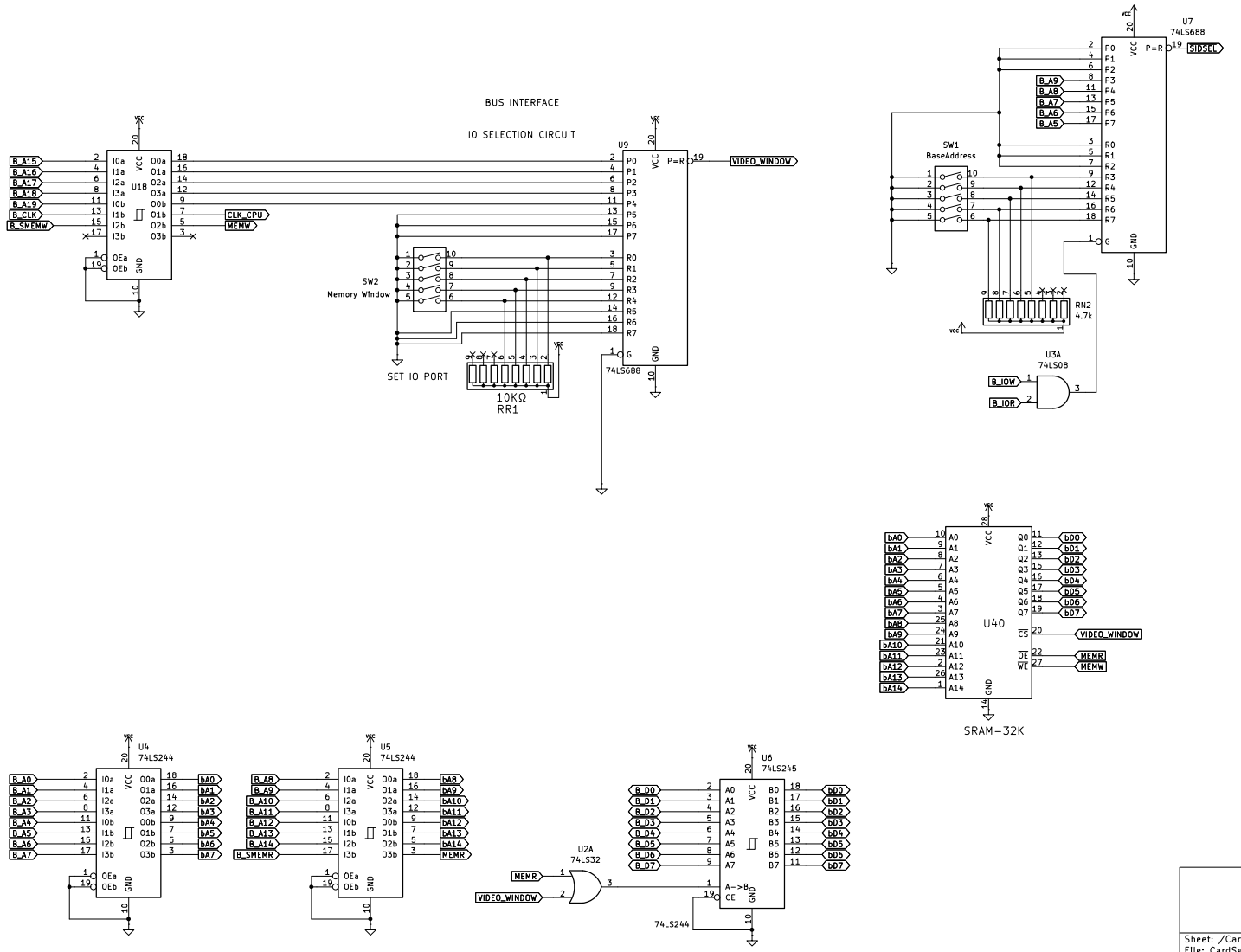

Sheet: /CardSelect/
File: CardSelect.kicad_sch

Title: ISA VIDEO/SID

Size: USLedger	Date: 2026-01-31	Rev: V1.1
KiCad E.D.A. 9.0.2		Id: 4/5

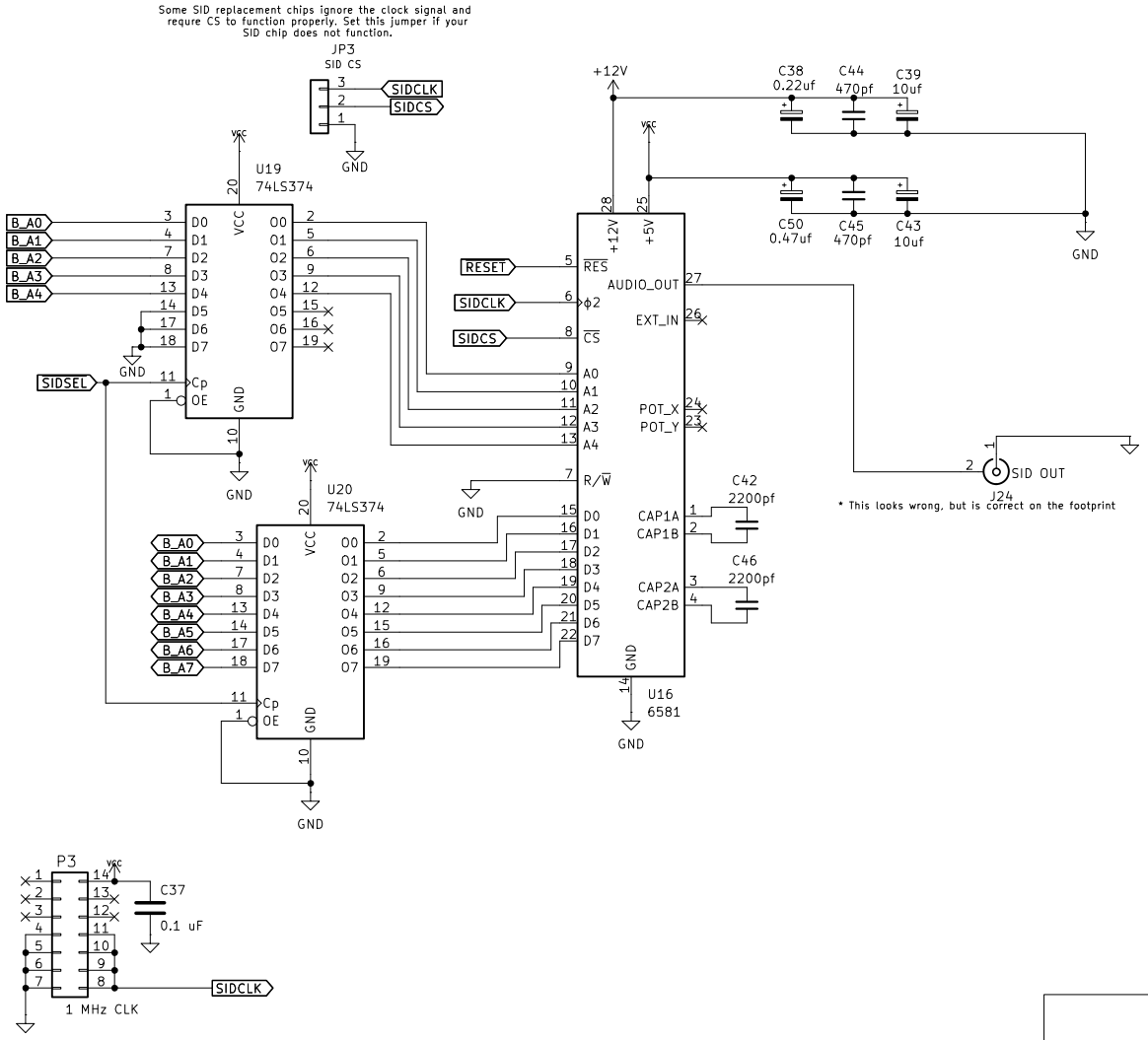

Sheet: /audio/
File: audio.kicad_sch

Title: ISA VIDEO/SID

Size: A4	Date: 2026-01-31	**Rev: V1.1**
KiCad E.D.A. 9.0.2		Id: 5/5