BS EN ISO 9606-1:2017

BSI Standards Publication

Qualification testing of welders — Fusion welding

Part 1: Steels

bsi.

British Standards Institution
by IHS Markit under license with BSI - Uncontrolled Copy
ction or networking permitted without license from IHS

Order Number: 02178406
Sold to:BORSIG BOILER SYSTEMS SDN BHD [700166106751],
Not for Resale,2017-11-28 02:38:15 UTC

National foreword

This British Standard is the UK implementation of EN ISO 9606-1:2017. It is identical to ISO 9606-1:2012, incorporating corrigendum September 2012. It supersedes BS EN ISO 9606-1:2013, which is withdrawn.

Please note that ISO corrigendum 2:2013 only affects the French edition and has therefore not been incorporated in this version.

During the development of this standard a new option (option c) was introduced to clause 9.3 to revalidate a welder's qualification. It is the opinion of the UK committee that options a) and b) are the preferred methods for the periodic verification of a welder's ability/skill to reproduce and meet the acceptance levels of the original test conditions.

Attention is drawn to clause 9.3 and which option/s may or may not be relevant or allowed in application standards or specific contract requirements. For the relationship with EU directives 2014/68/EU (PED) and 2014/29/EU (SPVD), see informative Annex ZA and ZB, respectively.

The UK participation in its preparation was entrusted to Technical Committee WEE/36, Qualification of welding personnel and welding procedures.

A list of organizations represented on this committee can be obtained on request to its secretary.

This publication does not purport to include all the necessary provisions of a contract. Users are responsible for its correct application.

© The British Standards Institution 2017
Published by BSI Standards Limited 2017

ISBN 978 0 580 94361 4

ICS 25.160.10; 03.100.30

Compliance with a British Standard cannot confer immunity from legal obligations.

This British Standard was published under the authority of the Standards Policy and Strategy Committee on 30 September 2017.

Amendments/corrigenda issued since publication

Date	Text affected

Copyright British Standards Institution
Provided by IHS Markit under license with BSI - Uncontrolled Copy
No reproduction or networking permitted without license from IHS

Order Number: 02178406
Sold to:BORSIG BOILER SYSTEMS SDN BHD [700166106751],
Not for Resale,2017-11-28 02:38:15 UTC

EUROPEAN STANDARD

NORME EUROPÉENNE

EUROPÄISCHE NORM

EN ISO 9606-1

August 2017

ICS 25.160.01

Supersedes EN ISO 9606-1:2013

English Version

Qualification testing of welders - Fusion welding - Part 1: Steels (ISO 9606-1:2012 including Cor 1:2012 and Cor 2:2013)

Épreuve de qualification des soudeurs - Soudage par fusion - Partie 1 : Aciers (ISO 9606-1:2012, y compris Cor 1:2012 et Cor 2:2013)

Prüfung von Schweißern - Schmelzschweißen - Teil 1: Stähle (ISO 9606-1:2012, einschließlich Cor 1:2012 und Cor 2:2013)

This European Standard was approved by CEN on 16 July 2017.

CEN members are bound to comply with the CEN/CENELEC Internal Regulations which stipulate the conditions for giving this European Standard the status of a national standard without any alteration. Up-to-date lists and bibliographical references concerning such national standards may be obtained on application to the CEN-CENELEC Management Centre or to any CEN member.

This European Standard exists in three official versions (English, French, German). A version in any other language made by translation under the responsibility of a CEN member into its own language and notified to the CEN-CENELEC Management Centre has the same status as the official versions.

CEN members are the national standards bodies of Austria, Belgium, Bulgaria, Croatia, Cyprus, Czech Republic, Denmark, Estonia, Finland, Former Yugoslav Republic of Macedonia, France, Germany, Greece, Hungary, Iceland, Ireland, Italy, Latvia, Lithuania, Luxembourg, Malta, Netherlands, Norway, Poland, Portugal, Romania, Serbia, Slovakia, Slovenia, Spain, Sweden, Switzerland, Turkey and United Kingdom.

EUROPEAN COMMITTEE FOR STANDARDIZATION
COMITÉ EUROPÉEN DE NORMALISATION
EUROPÄISCHES KOMITEE FÜR NORMUNG

CEN-CENELEC Management Centre: Avenue Marnix 17, B-1000 Brussels

© 2017 CEN All rights of exploitation in any form and by any means reserved worldwide for CEN national Members.

Ref. No. EN ISO 9606-1:2017 E

ish Standards Institution
HS Markit under license with BSI - Uncontrolled Copy
on or networking permitted without license from IHS

Order Number: 02178406
Sold to:BORSIG BOILER SYSTEMS SDN BHD [700166106751],
Not for Resale,2017-11-28 02:38:15 UTC

European foreword

The text of ISO 9606-1:2012 including Cor 1:2012 and Cor 2:2013 has been prepared by Technical Committee ISO/TC 44 "Welding and allied processes" of the International Organization for Standardization (ISO) and has been taken over as EN ISO 9606-1:2017 by Technical Committee CEN/TC 121 "Welding and allied processes" the secretariat of which is held by DIN.

This European Standard shall be given the status of a national standard, either by publication of an identical text or by endorsement, at the latest by February 2018, and conflicting national standards shall be withdrawn at the latest by February 2018.

Attention is drawn to the possibility that some of the elements of this document may be the subject of patent rights. CEN shall not be held responsible for identifying any or all such patent rights.

This document supersedes EN ISO 9606-1:2013.

This document has been prepared under a mandate given to CEN by the European Commission and the European Free Trade Association, and supports essential requirements of EU Directives 2014/68/EU and 2014/29/EU.

For relationship with EU Directives, see informative Annex ZA and ZB, which is an integral part of this document.

According to the CEN-CENELEC Internal Regulations, the national standards organizations of the following countries are bound to implement this European Standard: Austria, Belgium, Bulgaria, Croatia, Cyprus, Czech Republic, Denmark, Estonia, Finland, Former Yugoslav Republic of Macedonia, France, Germany, Greece, Hungary, Iceland, Ireland, Italy, Latvia, Lithuania, Luxembourg, Malta, Netherlands, Norway, Poland, Portugal, Romania, Serbia, Slovakia, Slovenia, Spain, Sweden, Switzerland, Turkey and the United Kingdom.

Endorsement notice

The text of ISO 9606-1:2012 including Cor.1:2012 and Cor 2:2013 has been approved by CEN as EN ISO 9606-1:2017 without any modification.

h Standards Institution
S Markit under license with BSI - Uncontrolled Copy
n or networking permitted without license from IHS

Order Number: 02178406
Sold to:SORSIG BOILER SYSTEMS SDN BHD (700166106751),
Not for Resale,2017-11-28 02:38:15 UTC

Annex ZA
(informative)

Relationship between this European Standard and the essential requirements of EU Directive 2014/68/EU [2014 OJ L 189] (PED) aimed to be covered

This European Standard has been prepared under a Commission's standardization request M/071 "Mandate to CEN for standardization in the field of pressure equipment" to provide one voluntary means of conforming to essential requirements of Directive 2014/68/EU (PED) on the harmonisation of the laws of the Member States relating to the making available on the market of pressure equipment [2014 OJ L 189].

Once this standard is cited in the Official Journal of the European Union under that Directive, compliance with the normative clauses of this standard given in Table ZA.1 confers, within the limits of the scope of this standard, a presumption of conformity with the corresponding essential requirements of that Directive, and associated EFTA regulations.

Table ZA.1 — Correspondence between this European Standard and Directive 2014/68/EU (PED) [2014 OJ L 189]

Essential Requirements of Directive 2014/68/EU (PED)	Clause(s)/sub-clause(s) of this EN	Remarks/Notes
Annex I, 3.1.2	Clauses 5, 6.2 to 6.6, 7, 8, 10, 11	Qualification testing
	Clauses 6.1, 9.1, 9.3 a), 9.3 b)	For pressure equipment in categories II, III and IV the examiner/examining body (according to 3.3 and 3.4) is a competent third party – a notified body or a recognized third party organization.
	Clause 9.3 c)	Not permitted for categories II, III and IV products.

WARNING 1 — Presumption of conformity stays valid only as long as a reference to this European Standard is maintained in the list published in the Official Journal of the European Union. Users of this standard should consult frequently the latest list published in the Official Journal of the European Union.

WARNING 2 — Other Union legislation may be applicable to the product(s) and services falling within the scope of this standard.

Copyright British Standards Institution
Provided by IHS Markit under license with BSI - Uncontrolled Copy
No reproduction or networking permitted without license from IHS

Order Number: 02178406
Sold to:BORSIG BOILER SYSTEMS SDN BHD [700166106751],
Not for Resale,2017-11-28 02:38:15 UTC

Annex ZB
(informative)

Relationship between this European Standard and the Essential Requirements of EU Directive 2014/29/EU (SPVD) [2014 OJ L96]

This European Standard has been prepared under a Commission's standardization request M/071 "Mandate to CEN for standardization in the field of pressure equipment" to provide one voluntary means of conforming to essential requirements of Directive 2014/29/EU (SPVD) on the harmonisation of the laws of the Member States relating to the making available on the market of simple pressure vessels [2014 OJ L96].

Once this standard is cited in the Official Journal of the European Union under that Directive, compliance with the normative clauses of this standard given in Table ZB.1 confers, within the limits of the scope of this standard, a presumption of conformity with the corresponding essential requirements of that Directive, and associated EFTA regulations.

Table ZB.1 — Correspondence between this European Standard and Directive 2014/29/EU (SPVD) [2014 OJ L96]

Essential Requirements of Directive 2014/29/EU (SPVD)	Clause(s)/sub-clause(s) of this EN	Remarks/Notes
Annex I, 3.2	Clauses 5, 6, 7, 8, 9.1, 9.3 a), 9.3 b), 10, 11	For welds on pressurised parts of simple pressure vessels the examiner/examining body (according to 3.3 and 3.4) is a notified body.

WARNING 1 — Presumption of conformity stays valid only as long as a reference to this European Standard is maintained in the list published in the Official Journal of the European Union. Users of this standard should consult frequently the latest list published in the Official Journal of the European Union.

WARNING 2 — Other Union legislation may be applicable to the product(s) and services falling within the scope of this standard.

ish Standards Institution
S Markit under license with BSI - Uncontrolled Copy
n or networking permitted without license from IHS

Order Number: 02178406
Sold to:BORSIG BOILER SYSTEMS SDN BHD [700166106751],
Not for Resale,2017-11-28 02:38:15 UTC

Contents

Page

Foreword iv
Introduction v
1 Scope 1
2 Normative references 1
3 Terms and definitions 2
4 Reference numbers, symbols and abbreviated terms 4
4.1 General 4
4.2 Reference numbers of welding processes 4
4.3 Symbols and abbreviated terms 4
5 Essential variables and range of qualification 6
5.1 General 6
5.2 Welding processes 7
5.3 Product type 8
5.4 Type of weld 9
5.5 Filler material grouping 9
5.6 Filler material type 10
5.7 Dimensions 11
5.8 Welding positions 13
5.9 Weld details 15
6 Examination and testing 15
6.1 Examination 15
6.2 Test pieces 16
6.3 Welding conditions 18
6.4 Test methods 18
6.5 Test piece and test specimen 19
6.6 Test report 23
7 Acceptance requirements for test pieces 23
8 Re-tests 24
9 Period of validity 24
9.1 Initial qualification 24
9.2 Confirmation of the validity 24
9.3 Revalidation of welder qualification 24
9.4 Revocation of qualification 24
10 Welder's qualification test certificate 25
11 Designation 25
Annex A (informative) Welder's qualification test certificate 27
Annex B (informative) Job knowledge 28
Annex C (informative) FW/BW test assembly option 31
Bibliography 32

© ISO 2012 – All rights reserved
Standards Institution
Markit under license with BSI - Uncontrolled Copy
or networking permitted without license from IHS
Order Number: 02178406
Sold to:BORSIG BOILER SYSTEMS SDN BHD [700166106751],
Not for Resale,2017-11-28 02:38:15 UTC

Foreword

ISO (the International Organization for Standardization) is a worldwide federation of national standards bodies (ISO member bodies). The work of preparing International Standards is normally carried out through ISO technical committees. Each member body interested in a subject for which a technical committee has been established has the right to be represented on that committee. International organizations, governmental and non-governmental, in liaison with ISO, also take part in the work. ISO collaborates closely with the International Electrotechnical Commission (IEC) on all matters of electrotechnical standardization.

International Standards are drafted in accordance with the rules given in the ISO/IEC Directives, Part 2.

The main task of technical committees is to prepare International Standards. Draft International Standards adopted by the technical committees are circulated to the member bodies for voting. Publication as an International Standard requires approval by at least 75 % of the member bodies casting a vote.

Attention is drawn to the possibility that some of the elements of this document may be the subject of patent rights. ISO shall not be held responsible for identifying any or all such patent rights.

ISO 9606-1 was prepared by Technical Committee ISO/TC 44, *Welding and allied processes*, Subcommittee SC 11, *Qualification requirements for welding and allied processes personnel*.

This second edition cancels and replaces the first edition (ISO 9606-1:1994), which has been technically revised. It also incorporates the Amendment ISO 9606-1:1994/Amd.1:1998.

ISO 9606 consists of the following parts, under the general title *Qualification testing of welders — Fusion welding*:

— *Part 1: Steels*

— *Part 2: Aluminium and aluminium alloys*

— *Part 3: Copper and copper alloys*

— *Part 4: Nickel and nickel alloys*

— *Part 5: Titanium and titanium alloys, zirconium and zirconium alloys*

Requests for official interpretations of any aspect of this part of ISO 9606 should be directed to the Secretariat of ISO/TC 44/SC 11 via your national standards body. A complete listing of these bodies can be found at www.iso.org.

© ISO 2012 – All rights reserved
Copyright British Standards Institution
Provided by IHS Markit under license with BSI - Uncontrolled Copy
No reproduction or networking permitted without license from IHS
Order Number: 02178406
Sold to:BORSIG BOILER SYSTEMS SDN BHD [700166106751],
Not for Resale,2017-11-28 02:38:15 UTC

Introduction

The ability of a welder to follow verbal or written instructions and verification of a person's skills are important factors in ensuring the quality of the welded product.

The testing of a welder's skill in accordance with this International Standard depends on the welding techniques and conditions used, in which uniform rules are complied with and standard test pieces are used.

The principle of this International Standard is that a qualification test qualifies a welder not only for the conditions used in the test, but also for all other conditions which are considered easier to weld in accordance with this International Standard. It is presumed that the welder has received training and/or has industrial practice within the range of qualification.

The qualification test can be used to qualify a welding procedure and a welder provided that all the relevant requirements, e.g. test piece dimensions and testing requirements are satisfied (see ISO 15614-1[11]).

All new qualifications shall be in accordance with each part of this International Standard from its date of issue.

At the end of its period of validity, existing qualification tests of welders in accordance with the requirement of a national standard may be revalidated according to this International Standard. This is providing that the technical intent of this International Standard is satisfied. It is necessary for the new range of qualification to be interpreted in accordance with the requirements of this International Standard.

© ISO 2012 – All rights reserved
n Standards Institution
© Markit under license with BSI - Uncontrolled Copy
n or networking permitted without license from IHS

Order Number: 02178406
Sold to:BORSIG BOILER SYSTEMS SDN BHD (700166106751),
Not for Resale,2017-11-28 02:38:15 UTC

Qualification testing of welders — Fusion welding —

Part 1:
Steels

1 Scope

This part of ISO 9606 specifies the requirements for qualification testing of welders for fusion welding of steels.

It provides a set of technical rules for a systematic qualification test of the welder, and enables such qualifications to be uniformly accepted independently of the type of product, location and examiner or examining body.

When qualifying welders, the emphasis is placed on the welder's ability manually to manipulate the electrode, welding torch or welding blowpipe, thereby producing a weld of acceptable quality.

The welding processes referred to in this part of ISO 9606 include those fusion-welding processes which are designated as manual or partly mechanized welding. It does not cover fully mechanized and automated welding processes.

NOTE For such processes, see ISO 14732[10].

2 Normative references

The following referenced documents are indispensable for the application of this document. For dated references, only the edition cited applies. For undated references, the latest edition of the referenced document (including any amendments) applies.

ISO 857-1, *Welding and allied processes — Vocabulary — Part 1: Metal welding processes*

ISO 3834-2, *Quality requirements for fusion welding of metallic materials — Part 2: Comprehensive quality requirements*

ISO 3834-3, *Quality requirements for fusion welding of metallic materials — Part 3: Standard quality requirements*

ISO 4063, *Welding and allied processes — Nomenclature of processes and reference numbers*

ISO 5173, *Destructive tests on welds in metallic materials — Bend tests*

ISO 5817, *Welding — Fusion-welded joints in steel, nickel, titanium and their alloys (beam welding excluded) — Quality levels for imperfections*

ISO 6947, *Welding and allied processes — Welding positions*

ISO 9017, *Destructive tests on welds in metallic materials — Fracture test*

ISO/TR 15608, *Welding — Guidelines for a metallic material grouping system*

ISO 15609-1, *Specification and qualification of welding procedures for metallic materials — Welding procedure specification — Part 1: Arc welding*

© ISO 2012 – All rights reserved

Standards Distribution Markit under license with BSI - Uncontrolled Copy for networking permitted without license from IHS

Order Number: 02178406
Sold to:BORSIG BOILER SYSTEMS SDN BHD [700166106751],
Not for Resale,2017-11-28 02:38:15 UTC

ISO 15609-2, *Specification and qualification of welding procedures for metallic materials — Welding procedure specification — Part 2: Gas welding*

ISO 17636 (all parts), *Non-destructive testing of welds — Radiographic testing*

ISO 17637, *Non-destructive testing of welds — Visual testing of fusion-welded joints*

ISO/TR 25901:2007, *Welding and related processes — Vocabulary*

3 Terms and definitions

For the purposes of this part of ISO 9606, the following terms and definitions apply.

3.1
welder
person who holds and manipulates the electrode holder, welding torch or blowpipe by hand

[ISO/TR 25901:2007, 2.428]

3.2
manufacturer
person or organization responsible for the welding production

[ISO 15607:2003,[12] 3.23]

3.3
examiner
person appointed to verify compliance with the applicable standard

NOTE In certain cases, an external independent examiner can be required.

[ISO/TR 25901:2007, 2.119]

3.4
examining body
organization appointed to verify compliance with the applicable standard

NOTE In certain cases, an external independent examining body can be required.

[ISO/TR 25901:2007, 2.120]

3.5
material backing
backing using material for the purpose of supporting molten weld metal

3.6
gas backing
backing using gas primarily for the purpose of preventing oxidation

3.7
flux backing
backing using flux primarily for the purpose of preventing oxidation

NOTE In submerged arc welding, flux backing may also reduce the risk of a weld pool collapse.

3.8
consumable insert
filler material that is placed at the root of the joint before welding to be completely fused into the root

© ISO 2012 – All rights reserved
Copyright British Standards Institution
Provided by IHS Markit under license with BSI - Uncontrolled Copy
No reproduction or networking permitted without license from IHS
Order Number: 02178406
Sold to:BORSIG BOILER SYSTEMS SDN BHD [700166106751],
Not for Resale,2017-11-28 02:38:15 UTC

3.9
layer
stratum of weld metal consisting of one or more runs

[ISO/TR 25901:2007, 2.209]

3.10
root run
root pass
⟨multi-layer welding⟩ run(s) of the first layer deposited in the root

[ISO/TR 25901:2007, 2.310]

3.11
filling run
⟨multi-layer welding⟩ run(s) deposited after the root run(s) and before the capping run(s)

[ISO/TR 25901:2007, 2.132]

3.12
capping run
⟨multi-layer welding⟩ run(s) visible on the weld face(s) after completion of welding

[ISO/TR 25901:2007, 2.57]

3.13
deposited thickness
thickness of the weld metal excluding any reinforcement

3.14
leftward welding
gas welding technique in which the filler rod is moved ahead of the blowpipe in relation to the welding direction

[ISO/TR 25901:2007, 2.210]

3.15
rightward welding
gas welding technique in which the filler rod is moved behind the blowpipe in relation to the welding direction

[ISO/TR 25901:2007, 2.302]

3.16
branch joint
joint of one or more tubular parts to the main pipe or to a shell

3.17
fillet weld
triangular weld in a square preparation for making a T-joint, corner joint or lap joint

[ISO/TR 25901:2007, 2.131]

3.18
verification
confirmation, through the provision of objective evidence, that specified requirements have been fulfilled

[ISO 9000:2005,[5] 3.8.4]

© ISO 2012 – All rights reserved

Standards Distribution Markit under license with BSI - Uncontrolled Copy
For networking permitted without license from IHS
Order Number: 02178406
Sold to:BORSIG BOILER SYSTEMS SDN BHD [700166106751],
Not for Resale,2017-11-28 02:38:15 UTC

4 Reference numbers, symbols and abbreviated terms

4.1 General

The following abbreviations and reference numbers shall be used when completing the welder's qualification test certificate (see Annex A).

4.2 Reference numbers of welding processes

This part of ISO 9606 covers the following manual or partly mechanized welding processes (reference numbers of welding processes for symbolic representations are listed in ISO 4063):

111 manual metal arc welding

114 self-shielded tubular cored arc welding

121 submerged arc welding with solid wire electrode (partly mechanized)

125 submerged arc welding with tubular cored electrode (partly mechanized)

131 MIG welding with solid wire electrode

135 MAG welding with solid wire electrode

136 MAG welding with flux cored electrode

138 MAG welding with metal cored electrode

141 TIG welding with solid filler material (wire/rod)

142 autogenous TIG welding

143 TIG welding with tubular cored filler material (wire/rod)

145 TIG welding using reducing gas and solid filler material (wire/rod)

15 plasma arc welding

311 oxyacetylene welding

See ISO/TR 25901 and ISO 857-1 for the definition of manual and partly mechanized welding.

NOTE The principles of this part of ISO 9606 can be applied to other fusion welding processes.

4.3 Symbols and abbreviated terms

4.3.1 For test pieces

a design throat thickness

BW butt weld

D outside pipe diameter

FW fillet weld

l_1 length of test piece

l_2 half-width of test piece

l_f examination length

P plate

s deposited thickness or fused metal thickness in butt welds

t material thickness of test piece (plate or wall thickness)

© ISO 2012 – All rights reserved
Copyright British Standards Institution
Provided by IHS Markit under license with BSI - Uncontrolled Copy
No reproduction or networking permitted without license from IHS
Order Number: 02178406
Sold to:BORSIG BOILER SYSTEMS SDN BHD [700166106751],
Not for Resale,2017-11-28 02:38:15 UTC

s_1 deposited thickness of test piece for welding process 1

s_2 deposited thickness of test piece for welding process 2

T pipe[1)]

z leg length of fillet weld

4.3.2 For filler materials

nm no filler material

The symbol for type of covering or core is based on those given in various International Standards on filler materials.

03 rutile basic covering

10 cellulosic covering

11 cellulosic covering

12 rutile covering

13 rutile covering

14 rutile + iron powder covering

15 basic covering

16 basic covering

18 basic + iron powder covering

19 limenite covering

20 iron oxide covering

24 rutile + iron powder covering

27 iron oxide + iron powder covering

28 basic + iron powder covering

45 basic covering

48 basic covering

A acid covering

B basic covering or electrode core — basic

C cellulosic covering

R rutile covering or electrode core — rutile, slow-freezing slag

RA rutile — acid covering

RB rutile — basic covering

RC rutile — cellulosic covering

RR rutile — thick covering

1) The word "pipe", alone or in combination, is used to mean "pipe", "tube" or "hollow section".

© ISO 2012 – All rights reserved
Standards Distribution
Markit under license with BSI - Uncontrolled Copy
or networking permitted without license from IHS

Order Number: 02178406
Sold to:BORSIG BOILER SYSTEMS SDN BHD [700166106751],
Not for Resale,2017-11-28 02:38:15 UTC

M metal cored electrode or metal powder

P electrode core — rutile, fast-freezing slag

S solid wire electrode — solid rod

V electrode core — rutile or basic/fluoride

W electrode core — basic/fluoride, slow-freezing slag

Y electrode core — basic/fluoride, fast-freezing slag

Z electrode core — other types

4.3.3 For other weld details

fb flux backing

bs welding from both sides

ci consumable insert

lw leftward welding

mb material backing

gb gas backing

ml multi-layer

nb welding with no material backing

rw rightward welding

sl single layer

ss single side welding

4.3.4 For bend tests

A minimum tensile elongation after fracture required by the material specification

d diameter of the former or the inner roller

t_s thickness of the bend test specimen

4.3.5 Types of arc welding

MAG metal active gas

MIG metal inert gas

TIG tungsten inert gas

5 Essential variables and range of qualification

5.1 General

The qualification of welders is based on essential variables. For each essential variable, a range of qualification is defined. If the welder has to weld outside the range of welder qualification, a new qualification test is required. The essential variables are:

— welding process(es);

— product type (plate or pipe);

Copyright British Standards Institution
Provided by IHS Markit under license with BSI - Uncontrolled Copy
No reproduction or networking permitted without license from IHS
Order Number: 0217840
Sold to:BORSIG BOIL
Not for Resale,2017-
IS SDN BHD [700166106751],
5 UTC
© ISO 2012 – All rights reserved

— type of weld (butt or fillet);

— filler material group;

— filler material type;

— dimension (material thickness and outside pipe diameter);

— welding position;

— weld detail(s) (material backing, gas backing, flux backing, consumable insert, single side welding, both side welding, single layer, multi-layer, leftward welding, rightward welding).

The parent material group(s) and subgroup(s), in accordance with ISO/TR 15608, that are used in the test shall be recorded on the welder's qualification test certificate.

5.2 Welding processes

Welding processes are defined in ISO 857-1 and listed in 4.2.

Each test normally qualifies only one welding process. A change of welding process requires a new qualification test.

Exceptions are as follows:

— a change from solid wire electrode 135 to a metal cored electrode 138, or vice versa, does not require requalification (see Table 5);

— a change from solid wire electrode 121 to a tubular cored electrode 125, or vice versa, does not require requalification (see Table 5);

— welding with 141, 143 or 145 qualifies for 141, 142, 143 and 145, but 142 only qualifies for 142;

— qualifying the welder for dip (short-circuit) transfer mode (131, 135 and 138) shall qualify him for other transfer modes, but not vice versa.

However, it is permitted for a welder to be qualified for two or more welding processes by welding a single test piece (multi-process joint) or by two or more separate qualification tests. The ranges of qualification concerning the deposited thickness for each welding process used and for the multi-process joint for butt welds are given in Tables 1 and 6.

© ISO 2012 – All rights reserved
Standards Distribution
Markit under license with BSI - Uncontrolled Copy
or networking permitted without license from IHS
Order Number: 02178406
Sold to:BORSIG BOILER SYSTEMS SDN BHD [700166106751],
Not for Resale,2017-11-28 02:38:15 UTC

Table 1 — Deposited thickness range of weld metal for single and multi-process joints for butt welds

Welding process used for test piece	Deposited thickness range qualified according to Table 6	
	Single process joint	Multi-process joint
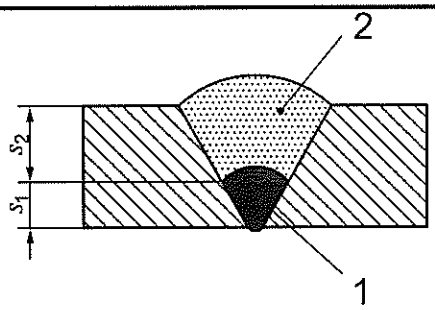 1 welding process 1 (ss nb) 2 welding process 2 (ss mb)	for welding process 1: $s = s_1$ for welding process 2: $s = s_2$	$s = s_1 + s_2$
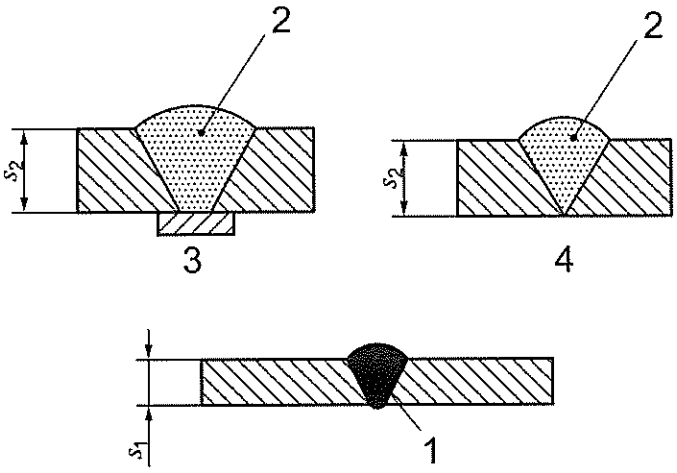 1 welding process 1 2 welding process 2 3 welding with backing (ss mb) 4 welding without backing (ss nb)	for welding process 1: s_1 for welding process 2: s_2	for $s = s_1 + s_2$ welding process 1 only for welding of the root area
NOTE See 4.3.1 for definitions of the variables.		

5.3 Product type

The qualification test shall be carried out on plate, pipe or other suitable product form. The following criteria are applicable:

a) test piece welds with outside pipe diameter $D > 25$ mm cover welds in plates;

b) test piece welds in plates cover welds in fixed pipe of outside pipe diameter $D \geq 500$ mm; in accordance with Tables 9 and 10.

c) test piece welds in plates cover welds in rotating pipes of outside pipe diameter $D \geq 75$ mm for welding positions PA, PB, PC, and PD; in accordance with Tables 9 and 10.

© ISO 2012 – All rights reserved
Copyright British Standards Institution
Provided by IHS Markit under license with BSI - Uncontrolled Copy
No reproduction or networking permitted without license from IHS
Order Number: 02178406
Sold to:BORSIG BOILER SYSTEMS SDN BHD [700106106751],
Not for Resale,2017-11-28 02:38:15 UTC

5.4 Type of weld

The qualification test shall be carried out as butt or fillet welding. The following criteria are applicable.

a) Butt welds cover butt welds in any type of joint except branch connections [see also c)].

b) Butt welds do not qualify fillet welds or vice versa. It is, however, permissible to qualify a fillet weld in combination with a butt weld, e.g. single bevel joint preparation with permanent material backing (a minimum test piece thickness of 10 mm shall be used). See Annex C.

   For this combination test, all testing requirements specified in this part of ISO 9606 shall be fulfilled and associated ranges of qualification shall be given based on the test conditions.

c) Butt welds in pipes qualify branch joints with an angle ≥60° and the same range of qualification as in Tables 1 to 12. For a branch weld, the range of qualification is based on the outside diameter of the branch.

d) For applications where the type of weld cannot be qualified by means of either a butt or fillet or for branch connections of less than 60°, a specific test piece should be used to qualify the welder, when specified (e.g. by the product standard).

e) Butt welds may qualify fillet welds if a supplementary fillet weld test piece (see Figure 3) is welded with each process, filler material (FM) group and electrode covering/core, in accordance with Tables 3, 4, and 5. The test piece shall be at least 10 mm thick, or the thickness of the butt weld test piece if the thickness is less, and completed using a single layer in the PB position. For this supplementary test, the welder shall be qualified for all fillet welds as given for the butt weld qualification variables related to the range of qualification for fillet welds (e.g. Tables 7, 8, 9, 10 and 12). Fillet weld positions PA and PB are qualified by this test.

5.5 Filler material grouping

5.5.1 General

The qualification test shall be carried out with filler material from one of the groups listed in Table 2. When welding with filler materials outside the filler material grouping in Table 2, a separate test is required.

The parent material used in a qualification test should be from any suitable material from ISO/TR 15608, material groups 1 to 11.

5.5.2 Range of qualification

Filler material groups are defined in Table 2.

Table 2 — Filler material grouping

Group	Filler material for welding of	Examples of applicable standards
FM1	Non-alloy and fine grain steels	ISO 2560,[2] ISO 14341,[8] ISO 636,[1] ISO 14171,[6] ISO 17632[14]
FM2	High-strength steels	ISO 18275,[21] ISO 16834,[13] ISO 26304,[25] ISO 18276[22]
FM3	Creep-resisting steels Cr < 3,75 %	ISO 3580,[3] ISO 21952,[23] ISO 24598,[24] ISO 17634[16]
FM4	Creep-resisting steels 3,75 ≤ Cr ≤ 12 %	ISO 3580,[3] ISO 21952,[23] ISO 24598,[24] ISO 17634[16]
FM5	Stainless and heat-resisting steels	ISO 3581,[4] ISO 14343,[9] ISO 17633[15]
FM6	Nickel and nickel alloys	ISO 14172,[7] ISO 18274[20]

© ISO 2012 – All rights reserved
Standards Distribution Markit under license with BSI - Uncontrolled Copy or networking permitted without license from IHS
Order Number: 02178406
Sold to:BORSIG BOILER SYSTEMS SDN BHD [700166106751],
Not for Resale,2017-11-28 02:38:15 UTC

Welding with a filler material in one group qualifies the welder for welding with all other filler materials within the same group, as well as other groups, listed in Table 3, and welding on parent materials from groups 1 to 11.

Table 3 — Range of qualification for filler material

Filler material	Range of qualification					
	FM1	FM2	FM3	FM4	FM5	FM6
FM1	×	×	—	—	—	—
FM2	×	×	—	—	—	—
FM3	×	×	×	—	—	—
FM4	×	×	×	×	—	—
FM5	—	—	—	—	×	—
FM6	—	—	—	—	×	×

× indicates those filler materials for which the welder is qualified.

— indicates those filler materials for which the welder is not qualified.

5.6 Filler material type

Welding with filler material qualifies for welding without filler material, but not vice versa.

NOTE For processes 142 and 311 (without filler material), the parent material group used in the test is the material group that the welder is qualified for.

The ranges of qualification for filler material type are given in Tables 4 and 5.

Table 4 — Range of qualification for covered electrodes[a]

Welding process	Type of covering used in the test[b]	Range of qualification		
		A, RA, RB, RC, RR, R 03, 13, 14, 19, 20, 24, 27	B 15, 16, 18, 28, 45, 48	C 10, 11
111	A, RA, RB, RC, RR, R 03, 13, 14, 19, 20, 24, 27	×	—	—
	B 15, 16, 18, 28, 45, 48	×	×	—
	C 10, 11	—	—	×

× indicates those filler material types for which the welder is qualified.

— indicates those filler material types for which the welder is not qualified.

[a] For abbreviations, see 4.3.2.

[b] The type of covering used in the qualification test of welders for root run welding without backing (ss nb) is the type of covering qualified for root run welding in production with no backing (ss nb).

Copyright British Standards Institution
Provided by IHS Markit under license with BSI - Uncontrolled Copy
No reproduction or networking permitted without license from IHS
Order Number: 02178406
Sold to:BORSIG BOILER SYSTEMS SDN BHD [700166106751],
Not for Resale,2017-11-28 02:38:15 UTC
© ISO 2012 – All rights reserved

Table 5 — Range of qualification for filler material types[a,b]

Filler material types used in test piece	Range of qualification			
	S	M	B	R, P, V, W, Y, Z
Solid wire electrode, rod (S)	×	×	—	—
Metal cored electrode, rod (M)	×	×	—	—
Flux cored electrode, rod (B)	—	—	×	×
Flux cored electrode, rod (R, P, V, W, Y, Z)	—	—	—	×

× indicates those filler material types for which the welder is qualified.

— indicates those filler material types for which the welder is not qualified.

[a] For abbreviations, see 4.3.2.

[b] The type of flux cored wire used in the qualification test of welders for root run welding without backing (ss, nb) is the type of flux cored wire qualified for root run welding in production with no backing (ss, nb).

5.7 Dimensions

The welder qualification test of butt welds is based on the deposited thickness and outside pipe diameters. The ranges of qualification are specified in Tables 6 and 7.

It is not intended that deposited thickness or outside pipe diameters should be measured precisely, but rather the general philosophy behind the values given in Tables 6 and 7 should be applied.

For fillet welds, the range of qualification for material thicknesses is specified in Table 8.

For test pieces of different outside pipe diameters and deposited thicknesses, the welder is qualified for:

— the thinnest through to the thickest deposited and/or parent metal thickness qualified; and

— the smallest through to the largest diameter qualified (refer to Tables 6 and 7).

Table 6 — Range of qualification of deposited thickness for butt welds

Dimensions in millimetres

Deposited thickness of test piece s	Range of qualification[a,b]
$s < 3$	s to 3[c] or s to $2s$[c] whichever is greater
$3 \leq s < 12$	3 to $2s$[d]
$s \geq 12$[e,f]	≥ 3[f]

[a] For single process and the same type of filler material, s, is equal to parent material t.

[b] For branch joints, the range of qualification for deposited thickness is:

— for set-on branch, see, for example, Figure 1 a), the deposited thickness of the branch;

— for set-through and set-in branches, see, for example, Figure1 b) and c), the deposited thickness of the main pipe or shell.

[c] For oxyacetylene welding (311): s to $1{,}5s$

[d] For oxyacetylene welding (311): 3 to $1{,}5s$

[e] The test piece has to be welded in at least 3 layers

[f] For multi-processes, s is the deposited thickness for each process.

© ISO 2012 – All rights reserved
Standards Malaysia
Markit under license with BSI - Uncontrolled Copy
or networking permitted without license from IHS
Order Number: 02178406
Sold to:BORSIG BOILER SYSTEMS SDN BHD (700166106751),
Not for Resale,2017-11-28 02:38:15 UTC

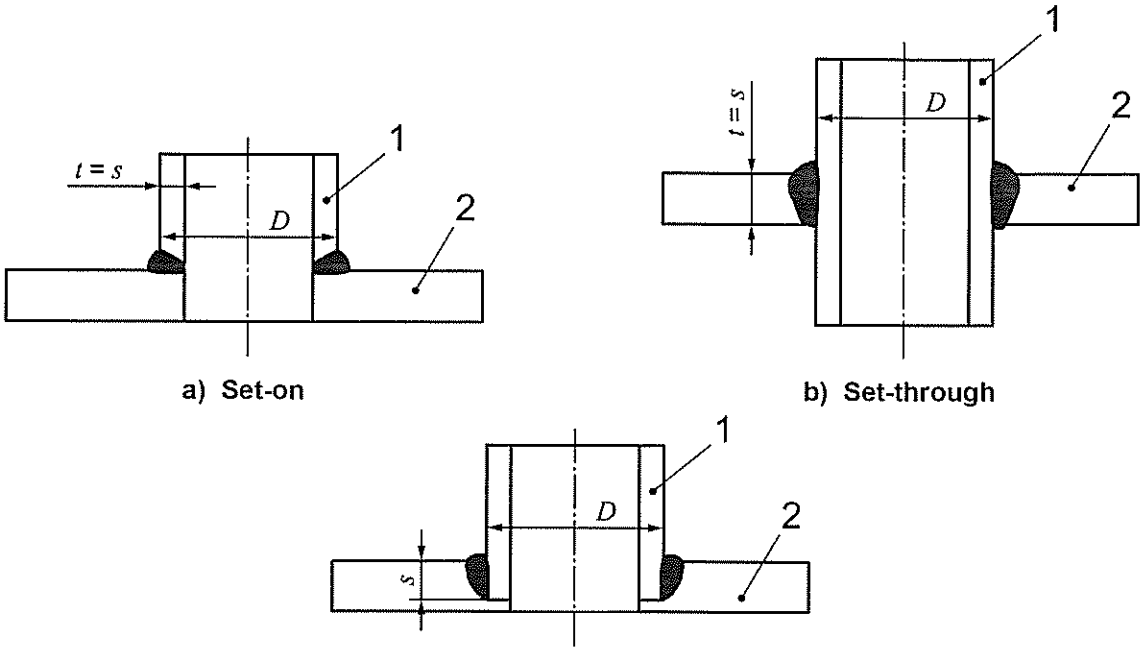

Key

D outside pipe diameter

s deposited thickness or fused metal thickness in butt welds

t material thickness of test piece (plate or wall thickness)

1 branch

2 main pipe or shell

Figure 1 — Branch types

Table 7 — Range of qualification for outside pipe diameter

Dimensions in millimetres

Outside pipe diameter of test piece[a] D	Range of qualification
$D \leq 25$	D to $2D$
$D > 25$	$\geq 0{,}5D$ (25 mm min.)
[a] For non-circular hollow sections, D is the dimension of the smaller side.	

Table 8 — Range of qualification of material thickness for fillet welds

Dimensions in millimetres

Material thickness of test piece t	Range of qualification
$t < 3$	t to $2t$, or 3, whichever is greater
$t \geq 3$	≥ 3

© Copyright British Standards Institution
P Provided by IHS Markit under license with BSI - Uncontrolled Copy
N No reproduction or networking permitted without license from IHS
Order Number: 02178406
Sold to:BORSIG BOILER SYSTEMS SDN BHD [700166106751],
Not for Resale,2017-11-28 02:38:15 UTC
© ISO 2012 – All rights reserved

In the case of branch welding, the deposited thickness criteria to which Table 6 applies and the outside pipe diameter criteria to which Table 7 applies are as follows:

— set-on: the deposited thickness and outside pipe diameter of the branch [see Figure 1 a)];

— set-in or set-through: the deposited thickness of the main pipe or shell and the outside pipe diameter of the branch [see Figure 1 b) and c)].

5.8 Welding positions

The range of qualification for each welding position is given in Tables 9 and 10. The welding positions and symbols refer to ISO 6947.

The test pieces shall be welded in accordance with the testing positions specified in ISO 6947.

Welding two pipes with the same outside pipe diameter, one in welding position PH and one in welding position PC, also covers the range of qualification of a pipe welded in welding position H-L045 using upward welding.

Welding two pipes with the same outside pipe diameter, one in welding position PJ and one in welding position PC, also covers the range of qualification of a pipe welded in welding position J-L045 using downward welding.

Outside pipe diameters $D \geq 150$ mm can be welded in two welding positions (PH or PJ 2/3 of circumference, PC 1/3 of circumference) using only one test piece. This test covers all positions for the direction of welding used in the test.

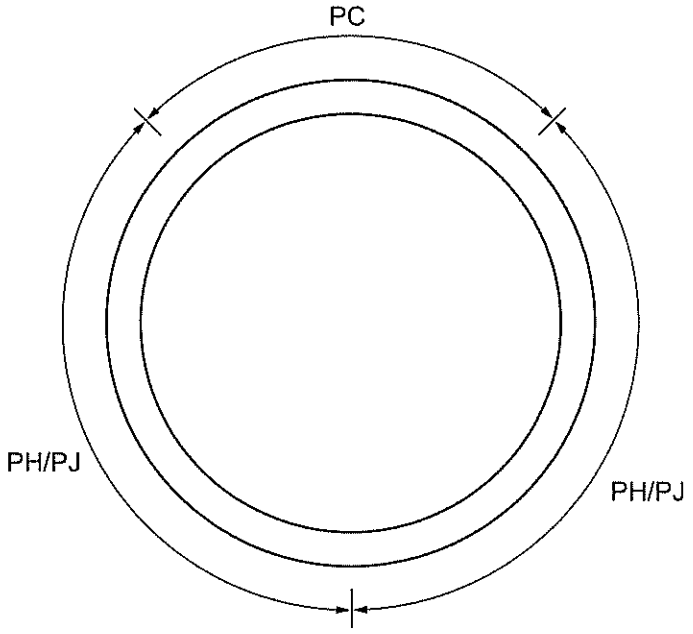

NOTE For welding position symbols, refer to ISO 6947.

Figure 2 — Outside pipe diameter $D \geq 150$ mm, positions

served
© ISO 2012 – All rights reserved
Standards Distribution Markit under license with BSI - Uncontrolled Copy
Non-networking permitted without license from IHS
Order Number: 02178406
Sold to:BORSIG BOILER SYSTEMS SDN BHD [700166106751],
Not for Resale,2017-11-28 02:38:15 UTC

Table 9 — Range of qualification for welding positions for butt welds

Testing position	Range of qualification				
	PA Flat	PC Horizontal	PE Overhead	PF Vertical up	PG Vertical down
PA	×	—	—	—	—
PC	×	×	—	—	—
PE (plate)	×	×	×	—	—
PF (plate)	×	—	—	×	—
PH (pipe)	×	—	×	×	—
PG (plate)	—	—	—	—	×
PJ (pipe)	×	—	×	—	×
H-L045	×	×	×	×	—
J-L045	×	×	×	—	×

NOTE See also 5.3.

× indicates those welding positions for which the welder is qualified.

— indicates those welding positions for which the welder is not qualified.

Table 10 — Range of qualification for welding positions for fillet welds

Testing position	Range of qualification						
	PA Flat	PB Horizontal	PC Horizontal	PD Overhead	PE Overhead	PF Vertical up	PG Vertical down
PA	×	—	—	—	—	—	—
PB	×	×	—	—	—	—	—
PC	×	×	×	—	—	—	—
PD	×	×	×	×	×	—	—
PE (plate)	×	×	×	×	×	—	—
PF (plate)	×	×	—	—	—	×	—
PH (pipe)	×	×	×	×	×	×	—
PG (plate)	—	—	—	—	—	—	×
PJ (pipe)	×	×	—	×	×	—	×

NOTE See also 5.3.

× indicates those welding positions for which the welder is qualified.

— indicates those welding positions for which the welder is not qualified.

© ISO 2012 – All rights reserved
Copyright British Standards Institution
Provided by IHS Markit under license with BSI - Uncontrolled Copy
No reproduction or networking permitted without license from IHS
Order Number: 02178406
Sold to:BORSIG BOILER SYSTEMS SDN BHD [700166106751],
Not for Resale,2017-11-28 02:38:15 UTC

5.9 Weld details

Depending on the weld details, the ranges of qualification are shown in Tables 11 and 12.

When welding with process 311, a change from rightward welding to leftward welding, and vice versa, requires a new qualification test.

Table 11 — Range of qualification for backings and consumable inserts

Test condition	Range for qualification for backing and consumable inserts					
	No backing (ss,nb)	Material backing (ss,mb)	Welding from both sides (bs)	Gas backing (ss,gb)	Consumable insert (ci)	Flux backing (ss,fb)
No backing (ss,nb)	×	×	×	×	—	×
Material backing (ss,mb)	—	×	×	—	—	—
Welding from both sides (bs)	—	×	×	—	—	—
Gas backing (ss,gb)	—	×	×	×	—	—
Consumable insert (ci)	—	×	×	—	×	—
Flux backing (ss,fb)	—	×	×	—	—	×

× indicates those conditions for which the welder is qualified.

— indicates those conditions for which the welder is not qualified.

Table 12 — Range of qualification of layer technique for fillet welds

Test piece	Range of qualification[b]	
	Single layer (sl)	Multi-layer (ml)
Single layer (sl)	×	—
Multi-layer (ml)[a]	×	×

× indicates the layer technique for which the welder is qualified.

— indicates the layer technique for which the welder is not qualified.

[a] During the welding of the test piece, the examiner shall perform visual examination of the first layer in accordance with Clause 7.

[b] When a welder has been qualified using a multi-layer butt weld and he or she makes the supplementary fillet weld test described in 5.4 e), he or she is qualified for both multi- and single layer fillet welds.

6 Examination and testing

6.1 Examination

The welding of test pieces shall be witnessed by the examiner or examining body. The testing shall be verified by the examiner or examining body.

The test pieces shall be marked with the identification of the examiner and the welder. Additionally, welding positions for all test pieces shall be marked on the test piece and, for fixed pipe welds, the 12 o'clock welding position shall also be marked.

© ISO 2012 – All rights reserved
Standards Distribution Market under license with BSI - Uncontrolled Copy
Networking permitted without license from IHS
Order Number: 02178406
Sold to:BORSIG BOILER SYSTEMS SDN BHD [700166106751],
Not for Resale,2017-11-28 02:38:15 UTC

The examiner or examining body may stop the test if the welding conditions are not correct or if it appears that the welder does not have the skill to fulfil the requirements, e.g. where there are excessive and/or systematic repairs.

6.2 Test pieces

The shape and dimension of test pieces required are shown in Figures 3 to 6.

A minimum test piece length for plates of 200 mm is required; the examination length is 150 mm. For pipe circumferences of less than 150 mm, additional test pieces will be required with a maximum of three test pieces.

Dimensions in millimetres

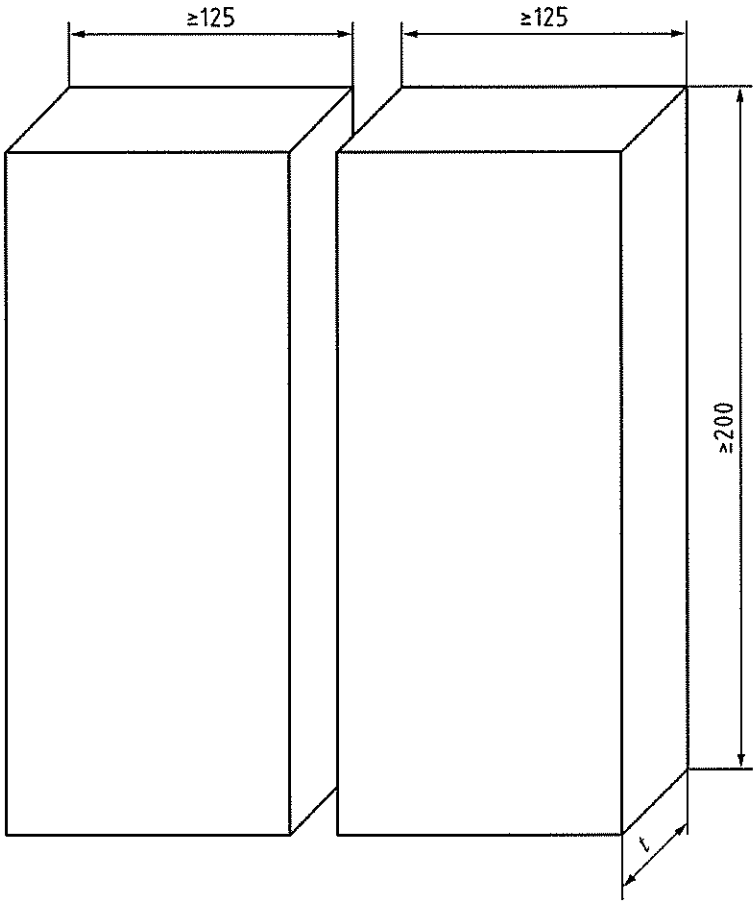

Key

t material thickness of test piece

Figure 3 — Dimensions of test piece for a butt weld in plate

Copyright British Standards Institution
Provided by IHS Markit under license with BSI - Uncontrolled Copy
No reproduction or networking permitted without license from IHS
Order Number: 02178406
Sold to:BORSIG BOILER SYSTEMS SDN BHD [700166106751],
Not for Resale,2017-11-28 02:38:15 UTC
© ISO 2012 – All rights reserved

Dimensions in millimetres

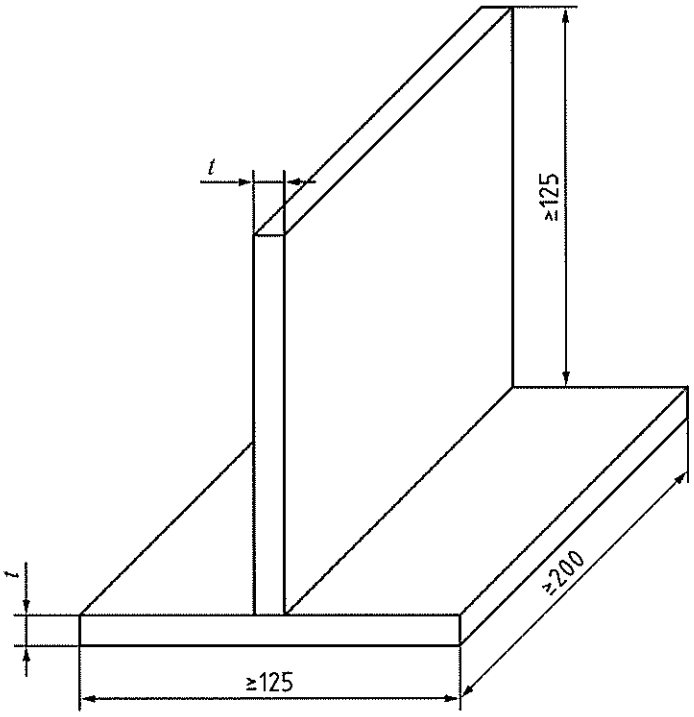

Key

t material thickness of test piece

NOTE The parent material can be of dissimilar thickness.

Figure 4 — Dimensions of test piece for a fillet weld on plate

Dimensions in millimetres

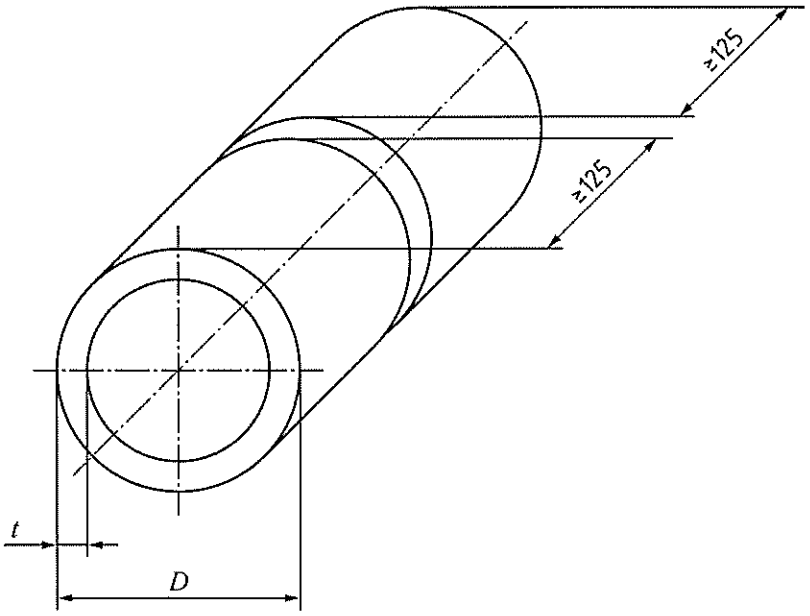

Key

D outside pipe diameter

t material thickness of test piece (wall thickness)

Figure 5 — Dimensions of test piece for a butt weld in pipe

eserved
© ISO 2012 – All rights reserved
Standards Distribution
Kit under license with BSI - Uncontrolled Copy
networking permitted without license from IHS
Order Number: 02178406
Sold to:BORSIG BOILER SYSTEMS SDN BHD [700166106751],
Not for Resale,2017-11-28 02:38:15 UTC

Dimensions in millimetres

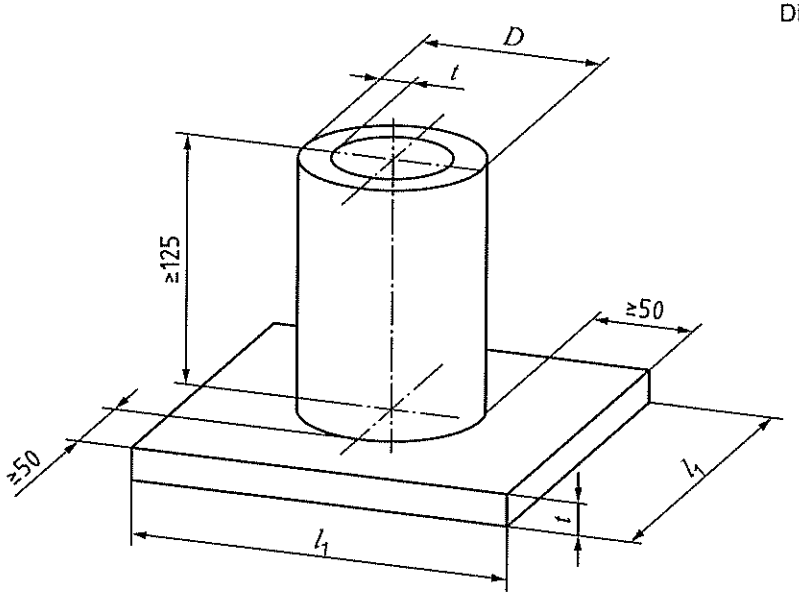

Key

D outside pipe diameter

l_1 length of test piece

t material thickness of test piece (plate or wall thickness)

NOTE The parent material can be of dissimilar thickness for the pipe and plate.

Figure 6 — Dimensions of test piece for a fillet weld on pipe

6.3 Welding conditions

The qualification test of welders shall follow a pWPS or WPS prepared in accordance with ISO 15609-1 or ISO 15609-2. The required throat thickness of the fillet weld test piece shall be defined in the pWPS or WPS used for the test.

The following welding conditions shall apply.

— The test piece shall have at least one stop and restart in the root run and in the capping run. When more than one process is used, then at least one stop and restart shall be carried out for each process, this includes the root run and final run. The stop and restart areas shall be marked.

— The welder shall be allowed to remove minor imperfections by grinding, except for the capping run for which only the stop and restart may be ground. The permission of the examiner or examining body shall be obtained.

— Any post-weld heat treatment required in the pWPS or WPS may be omitted at the discretion of the manufacturer.

6.4 Test methods

After welding the test piece shall be tested in accordance with Table 13.

If the weld is accepted by visual testing, the remaining test(s) according to Table 13 shall be carried out.

When material backing is used in the qualification test, it shall be removed prior to destructive testing (except for macroscopic examination) and need not be removed before non-destructive testing (NDT).

The test specimen for macroscopic examination shall be prepared and etched on one side to clearly reveal the weld. Polishing is not required.

Copyright British Standards Institution
Provided by IHS Markit under license with BSI - Uncontrolled Copy
No reproduction or networking permitted without license from IHS
Order Number: 02178406
Sold to:BORSIG BOILER SYSTEMS SDN BHD [700166106751],
Not for Resale,2017-11-28 02:38:15 UTC
© ISO 2012 – All rights reserved

Table 13 — Test methods

Test method	Butt weld (in plate or pipe)	Fillet weld and branch joint
Visual testing according to ISO 17637	mandatory	mandatory
Radiographic testing according to ISO 17636	mandatory[a,b,c]	not mandatory
Bend test according to ISO 5173	mandatory[a,b,d]	not applicable
Fracture test according to ISO 9017	mandatory[a,b,d]	mandatory[e,f]

[a] Either radiographic testing or bend or fracture tests shall be used.

[b] When radiographic testing is used, then additional bend or fracture tests are mandatory for welding processes 131, 135, 138 and 311.

[c] The radiographic testing may be replaced by ultrasonic testing according to ISO 17640[19] for thicknesses ≥8 mm on ferritic steels only. In this case, the additional tests mentioned in footnote b are not required.

[d] For outside pipe diameters $D \leq 25$ mm, the bend or fracture tests may be replaced by a notched tensile test of the complete test piece (an example is given in Figure 9).

[e] The fracture tests may be replaced by a macroscopic examination, performed according to ISO 17639[18], of at least two sections,at least one of which shall be taken from the stop/start location.

[f] The fracture tests on pipes may be replaced by radiographic testing.

6.5 Test piece and test specimen

6.5.1 General

In 6.5.2 and 6.5.3, details of the type, dimensions, and preparation of the test pieces and test specimens are given. In addition, the requirements for destructive tests are indicated. For root, face or side bend, or fracture tests, one specimen shall be taken from the start and stop area in the examination length.

6.5.2 Butt weld in plate and pipe

6.5.2.1 General

When radiographic testing is used, the examination length of the weld (see Figures 7 and 8) in the test piece shall be radiographed.

When fracture testing is used, test specimens may be longitudinally notched in the centre of the weld of the side in tension in order to achieve a fracture in the weld. All notch preparations according to ISO 9017 are permitted.

All test specimens shall be tested in such a manner that fracture is reached and the specimen examined after fracture.

6.5.2.2 Fracture testing only

For butt welds in plate, the test piece examination length (Figure 7) shall be cut into four test specimens of equal width in accordance with the dimensions given in Table 14.

For butt welds in pipe, the test piece examination length (Figure 8) shall be cut into four test specimens of equal width in accordance with the dimensions given in Table 14.

© ISO 2012 – All rights reserved
Standards Malaysia
Downloaded under license with BSI - Uncontrolled Copy
Unauthorised networking permitted without license from IHS
Order Number: 02178406
Sold to:BORSIG BOILER SYSTEMS SDN BHD [700166106751],
Not for Resale,2017-11-28 02:38:15 UTC

Dimensions in millimetres

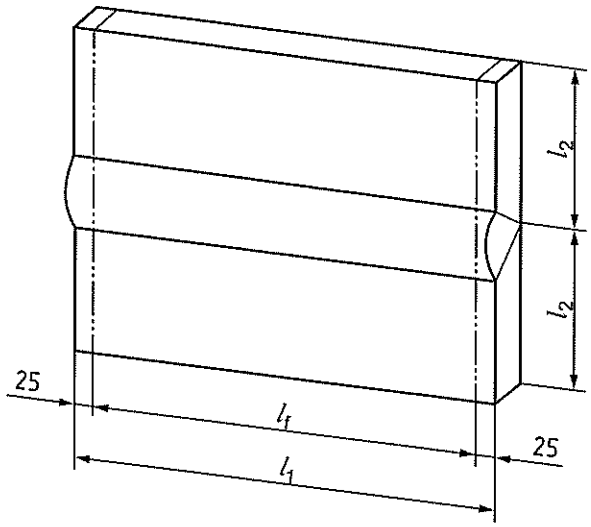

Key

l_1 length of test piece

l_2 half-width of test piece

l_f examination length

Figure 7 — Examination length for fracture test specimens for a butt weld in plate

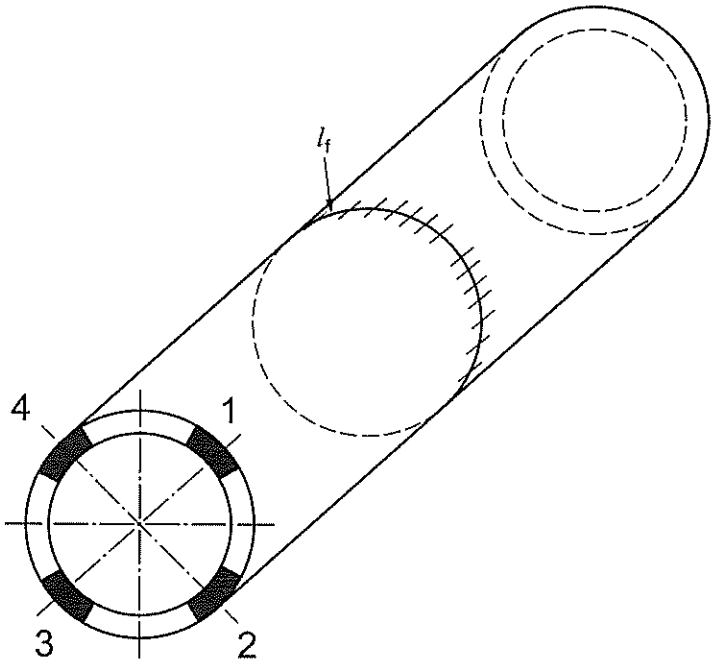

Key

l_f examination length

1 one root fracture or one root transverse bend or one side-bend test specimen

2 one face fracture or one face transverse bend or one side-bend test specimen

3 one root fracture or one root transverse bend or one side-bend test specimen

4 one face fracture or one face transverse bend or one side-bend test specimen

Figure 8 — Examination length and locations for fracture or bend test specimens for a butt weld in pipe

Copyright British Standards Institution
Provided by IHS Markit under license with BSI - Uncontrolled Copy
No reproduction or networking permitted without license from IHS

Order Number: 02178406
Sold to:BORSIG BOILER SYSTEMS SDN BHD [700166106751],
Not for Resale,2017-11-28 02:38:15 UTC

© ISO 2012 – All rights reserved

Table 14 — Width of fracture test specimens

Dimensions in millimetres

Product type		Width of fracture test specimens
Plates (P)	Outside diameter, D, of pipes (T)[a]	
×	≥100	≥35
—	$50 \leq D < 100$	≥20
—	$25 < D < 50$	≥10

[a] For pipes with outside diameter $D \leq 25$ mm, the notch tensile test piece according to Figure 9 is recommended.

Dimensions in millimetres

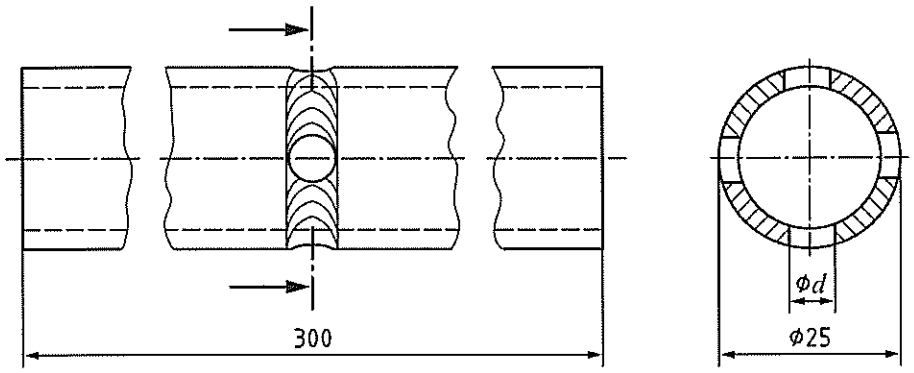

Key

d diameter of the former or the inner roller

Holes are not allowed in start and stop areas.

For $t \geq 1{,}8$ mm: $d = 4{,}5$ mm

For $t < 1{,}8$ mm: $d = 3{,}5$ mm

NOTE Notch profiles s and q are also permitted in circumferential direction according to ISO 9017.

Figure 9 — Example for notch tensile test for pipe test piece outside diameter ≤25 mm

6.5.2.3 Bend testing only

Bend tests shall be performed in accordance with ISO 5173.

When only bend testing is carried out, the following conditions shall apply.

For thicknesses $t < 12$ mm, a minimum of two root and two face bend test specimens shall be used, and the complete examination length shall be tested.

For thicknesses $t \geq 12$ mm, four side-bend test specimens shall be used approximately equally spaced along the examination length.

For pipe butt welds, the four specimens shall be equally spaced in accordance with Figure 8.

In all cases, at least one specimen shall be taken from a stop/start location. For this purpose, it is possible that a side-bend specimen can be substituted by a root-bend specimen.

served
© ISO 2012 – All rights reserved
Standards Distribution Market under license with BSI · Uncontrolled Copy
Networking permitted without license from IHS
Order Number: 02178406
Sold to:BORSIG BOILER SYSTEMS SDN BHD [700166106751],
Not for Resale,2017-11-28 02:38:15 UTC

When transverse bend testing or side-bend testing is used, the diameter of the former or the inner roller shall be $4t$ and the bending angle 180° for parent metal with elongation $A \geq 20$ %. For parent metal with elongation $A < 20$ %, the following equation shall apply:

$$d = \frac{100 \times t_s}{A} - t_s$$

where

d is the diameter of the former or the inner roller, in millimetres;

t_s is the thickness of the bend-test specimen, in millimetres;

A is the minimum percentage elongation required by the material standard.

6.5.2.4 Additional bend or fracture test

When additional bend or fracture tests are required (see Table 13, footnote b), in all cases, at least one specimen shall be taken from a stop/start location. For this purpose, it is possible that a side-bend specimen can be substituted by a root-bend specimen.

— For all plate butt welds, one root and one face test specimen shall be tested or two side-bend test specimens if applicable.

— For butt welds in pipe in PA or PC positions, one root and one face test specimen shall be tested or two side-bend test specimens, if applicable.

— For butt welds in pipe welded in all other welding positions, one root-test specimen shall be taken from the PE (overhead) welding position and one face test specimen shall be taken from the PF (vertical up) position or the PG (vertical down) position, or two side-bend test specimens if applicable.

6.5.3 Fillet weld on plate and pipe

For fillet welds on plate, the test piece examination length (Figure 10) shall be fractured as one complete specimen. If necessary, the test piece can be cut into several test specimens of equal width.

For fillet welds on pipe, the test piece shall be cut into four or more test specimens and fractured.

Fillet weld fracture tests on plate and pipe may be replaced by macroscopic examination. When macroscopic examination is used, at least two specimens shall be taken. One macroscopic specimen shall be taken at the stop/start location.

Fillet weld test specimens shall be positioned for breaking in accordance with ISO 9017.

Copyright British Standards Institution
Provided by IHS Markit under license with BSI - Uncontrolled Copy
No reproduction or networking permitted without license from IHS
Order Number: 02178406
Sold to:BORSIG BOILER SYSTEMS SDN BHD [700166106751],
Not for Resale,2017-11-28 02:38:15 UTC
© ISO 2012 – All rights reserved

Dimensions in millimetres

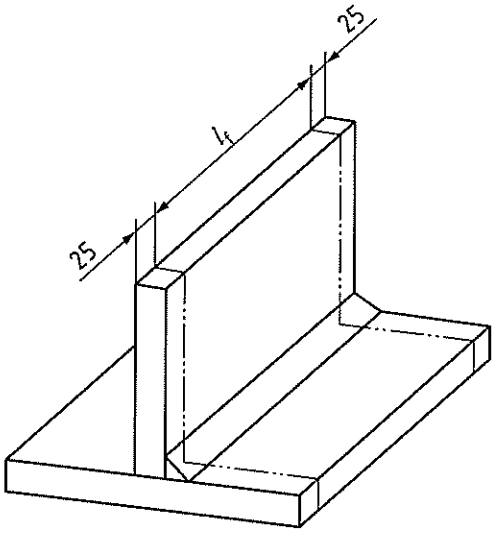

Key

l_f examination length

Figure 10 — Examination length for fracture testing for a fillet weld in plate

6.6 Test report

The results of all testing shall be documented in accordance with the relevant test standard.

7 Acceptance requirements for test pieces

Test pieces shall be evaluated according to the acceptance requirements specified for relevant types of imperfections.

Prior to any testing, the following shall be checked:

— all slag and spatters are removed;

— no grinding on the root and the face side of the weld (according to 6.3);

— stop and restart in the root run and in the capping run are identified (according to 6.3);

— profile and dimensions.

The acceptance requirements for imperfections found by test methods performed according to this part of ISO 9606 shall, unless otherwise specified, be assessed in accordance with ISO 5817. A welder is qualified if the imperfections are within ISO 5817, quality level B, except for the following imperfection types for which level C shall apply: excess weld metal (502); excessive convexity (503); excessive throat thickness (5214); excessive penetration (504); and undercut (501).

Bend-test specimens shall not reveal any discrete discontinuity ≥3 mm in any direction. Discontinuities appearing at the edges of a test specimen during testing shall be ignored in the evaluation unless there is evidence that cracking is due to incomplete penetration, slag or other discontinuity. The sum of the greatest discontinuities exceeding 1 mm but less than 3 mm in any one bend specimen shall not exceed 10 mm.

If the imperfections in the welder's test piece exceed the permitted maximum specified, then the welder fails the test.

Reference should also be made to the corresponding acceptance criteria for non-destructive testing. Specified procedures shall be used for all destructive and non-destructive testing.

erved
© ISO 2012 – All rights reserved
Standards Distribution Markit under license with BSI - Uncontrolled Copy or networking permitted without license from IHS
Order Number: 02178406
Sold to:BORSIG BOILER SYSTEMS SDN BHD [700166106751],
Not for Resale,2017-11-28 02:38:15 UTC

8 Re-tests

If any test fails to comply with the requirements of this part of ISO 9606, the welder may be given the opportunity to repeat the qualification test once without further training.

9 Period of validity

9.1 Initial qualification

The welder's qualification begins from the date of welding of the test piece(s), provided that the required testing has been carried out and the test results obtained were acceptable. The certificate needs to be confirmed every 6 months otherwise the certificate(s) become(s) invalid.

The validity of the certificate may be extended as specified in 9.3. The chosen method of the extension of qualification in accordance with 9.3, a) or b) or c), shall be stated on the certificate at the time of issue.

9.2 Confirmation of the validity

The qualifications of a welder for a process shall be confirmed every 6 months by the person responsible for welding activities or examiner/examining body. This is confirming that the welder has worked within the range of qualification and extends the validity of the qualification for a further 6 month period.

This subclause is applicable to all options of revalidation specified in 9.3.

9.3 Revalidation of welder qualification

Revalidation shall be carried out by an examiner/examining body.

The skill of the welder shall be periodically verified by one of the following methods.

a) The welder shall be retested every 3 years.

b) Every 2 years, two welds made during the last 6 months of the validity period shall be tested by radiographic or ultrasonic testing or destructive testing and shall be recorded. The acceptance levels for imperfections shall be as specified in Clause 7. The weld tested shall reproduce the original test conditions except for thickness and outside diameter. These tests revalidate the welder's qualifications for an additional 2 years.

c) A welder's qualifications for any certificate shall be valid as long as it is confirmed according to 9.2 and provided all the following conditions are fulfilled:

   — the welder is working for the same manufacturer for whom he or she qualified, and who is responsible for the manufacture of the product;

   — the manufacturer's quality programme has been verified in accordance with ISO 3834-2 or ISO 3834-3;

   — the manufacturer has documented that the welder has produced welds of acceptable quality based on application standards; the welds examined shall confirm the following conditions: welding position(s), weld type (FW, BW), material backing (mb) or no material backing (nb).

9.4 Revocation of qualification

When there is a specific reason to question a welder's ability to make welds that meet the product standard quality requirements, the qualifications that support the welding he or she is doing shall be revoked. All other qualifications not questioned remain valid.

Copyright British Standards Institution
Provided by IHS Markit under license with BSI - Uncontrolled Copy
No reproduction or networking permitted without license from IHS
Order Number: 02178406
Sold to:BORSIG BOILER SYSTEMS SDN BHD [700166106751],
Not for Resale,2017-11-28 02:38:15 UTC
© ISO 2012 – All rights reserved

10 Welder's qualification test certificate

It shall be verified that the welder has successfully passed the qualification test. All essential variables shall be recorded on the certificate. If the test piece(s) fail(s) any of the required tests, no certificate shall be issued.

The certificate shall be issued under the sole responsibility of the examiner or examining body. A recommended format is detailed in Annex A. If any other form of welder's qualification test certificate is used, it shall contain the information required in Annex A. The examiner or examining body is responsible for verifying that all essential variables are addressed in this certificate.

The following non-essential variables shall be recorded on the certificate:

— type of current and polarity;

— parent material group/subgroup;

— shielding gas.

In general, for each test piece, a separate welder's qualification test certificate shall be issued.

If more than one test piece is welded, a single welder's qualification test certificate can be issued that combines the ranges of qualification of the individual test pieces. All essential variables for all tests shall be recorded on the combined certificate. In this case, only one of the following essential variables is permitted to differ, except those given in 5.7.

— type of weld,

— welding position,

— deposited thickness.

It is not permissible to change other essential variables.

It is recommended that the welder's qualification test certificates be issued in the local language plus at least one of the following languages: English, French or German.

The examination of job knowledge (see Annex B) shall be designated by "Accepted" or "Not tested".

In accordance with 5.4 e) the supplementary fillet weld test shall be recorded on the certificate for the associated butt weld qualification.

11 Designation

The designation of a welder qualification shall comprise the following items in the order given (the system is arranged so that it can be used for computerization):

a) the number of this part of ISO 9606 (ISO 9606-1);

b) the essential variables:

   1) welding processes: refer to 4.2, 5.2, and ISO 4063,

   2) product type: plate (P), pipe (T), refer to 4.3.1 and 5.3,

   3) type of weld: butt weld (BW), fillet weld (FW), refer to 5.4,

   4) filler material group or parent material group (autogenous welding): refer to 5.5,

© ISO 2012 – All rights reserved
Standards Infobase Kit under license with BSI - Uncontrolled Copy
Unnetworking permitted without licence from IHS

Order Number: 02178406
Sold to:BORSIG BOILER SYSTEMS SDN BHD [700166106751],
Not for Resale,2017-11-28 02:38:15 UTC

5) filler material types: refer to 5.6,

6) dimensions of test piece: deposited thickness, s, or material thickness, t, and outside pipe diameter, D, refer to 5.7,

7) welding positions: refer to 5.8 and ISO 6947,

8) weld details: refer to 5.9.

The type of shielding and backing gas shall not be incorporated in the designation, but shall be included in the welder's qualification test certificate (see Annex A).

Copyright British Standards Institution
Provided by IHS Markit under license with BSI - Uncontrolled Copy
No reproduction or networking permitted without license from IHS
Order Number: 02178406
Sold to:BORSIG BOILER SYSTEMS SDN BHD [700166106751],
Not for Resale,2017-11-28 02:38:15 UTC
© ISO 2012 – All rights reserved

Annex A
(informative)

Welder's qualification test certificate

Designation(s): .....

.....

WPS – Reference: Examiner or examining body – Reference No.:

Welder's name:

Identification:

Method of identification:

Date and place of birth:

Employer:

Code/testing standard:

Photograph (if required)

Job knowledge: Acceptable/Not tested (delete as necessary)

	Test piece	Range of qualification
Welding process(es);		
Transfer mode		
Product type (plate or pipe)		
Type of weld		
Parent material group(s)/subgroups		
Filler material group(s)		
Filler material (Designation)		
Shielding gas		
Auxiliaries		----------
Type of current and polarity		----------
Material thickness (mm)		
Deposited thickness (mm)		
Outside pipe diameter (mm)		
Welding position		
Weld details		
Multi-layer/single layer		

Supplementary fillet weld test (completed in conjunction with a butt weld qualification): acceptable/not acceptable

Type of test	Performed and accepted	Not tested
Visual testing		
Radiographic testing		
Fracture test		
Bend test		
Notch tensile test		
Macroscopic examination		

Name of examiner or examining body:

Place, date and signature of examiner or examining body:

Date of issue: 2007-01-20

Revalidation 9.3 a)		Valid until 2010-01-20	Revalidation 9.3 b)		Valid until 2009-01-20	Revalidation 9.3 c)		Valid until 2007-07-20

Revalidation for qualification by examiner or examining body for the following 2 years [refer to 9.3 b)]

Date	Signature	Position or title

Confirmation of the validity by employer/welding coordinator/examiner or examining body for the following 6 months [refer to 9.2)]

Date	Signature	Position or title

© ISO 2012 – All rights reserved
Standards Malaysia
Licensed under license with BSI - Uncontrolled Copy
Networking permitted without license from IHS
Order Number: 02178406
Sold to:BORSIG BOILER SYSTEMS SDN BHD (700166106751),
Not for Resale,2017-11-28 02:36:15 UTC

Annex B
(informative)

Job knowledge

B.1 General

The test of job knowledge is recommended, but it is not mandatory.

However, some countries may require that the welder undergo a test of job knowledge. If the job knowledge test is carried out, it should be recorded on the welder's qualification test certificate.

This annex outlines the job knowledge that a welder should have in order to ensure that procedures are followed and common practices are complied with. The job knowledge indicated in this annex is only pitched at the most basic level.

Owing to different training programmes in various countries, it is only proposed to standardize general objectives or categories of job knowledge. The actual question used should be drawn up in the individual country concerned, but should include questions on areas covered in B.2, relevant to the qualification test of welders.

The actual tests of a welder's job knowledge may be given by any of the following methods or combinations of these methods:

a) written objective tests (multiple choice);

b) oral questioning following a set of written questions;

c) computer testing;

d) demonstration/observation testing following a written set of criteria.

The test of job knowledge is limited to the matters related to the welding process used in the test.

B.2 Requirements

B.2.1 Welding equipment

B.2.1.1 Oxyacetylene welding

a) Identification of gas cylinders.

b) Identification and assembly of essential components.

c) Selection of correct nozzles and welding blowpipes.

B.2.1.2 Arc welding

a) Construction and maintenance of welding equipment and typical parameters.

b) Type of welding current.

c) Correct connection of the welding return cable.

Copyright British Standards Institution
Provided by IHS Markit under license with BSI - Uncontrolled Copy
No reproduction or networking permitted without license from IHS
Order Number: 02178406
Sold to:BORSIG BOILER SYSTEMS SDN BHD [700166106751],
Not for Resale,2017-11-28 02:38:15 UTC
© ISO 2012 – All rights reserved

B.2.2 Welding process[2)]

B.2.2.1 Oxyacetylene welding (311)

a) Gas pressure.

b) Selection of nozzle type.

c) Type of gas flame.

d) Effect of overheating.

B.2.2.2 Manual metal-arc welding with covered electrode (111)

a) Classification of electrodes.

B.2.2.3 Gas and self-shielded metal-arc welding (114, 13, 14, 15)

a) Type and size of electrodes.

b) Identification of shielding gas and flow rate (without 114).

c) Type, size and maintenance of nozzles/contact tip.

d) Selection and limitations of transfer mode.

e) Protection of the welding arc from draughts.

B.2.2.4 Submerged arc welding (121, 125)

a) Drying, feeding and correct recovery of flux.

b) Correct alignment and travel of welding head.

B.2.3 Parent metals

a) Identification of material.

b) Methods and control of pre-heating.

c) Control of interpass temperature.

B.2.4 Filler metal types

a) Identification of filler metal types.

b) Storage, handling and conditions of filler metal types.

c) Selection of correct size.

d) Cleanliness of electrodes and filler wires.

e) Control of wire spooling.

f) Control and monitoring of gas flow rates.

---

2) The numbers refer to ISO 4063.

reserved © ISO 2012 – All rights reserved
Standards Malaysia
Market under license with BSI · Uncontrolled Copy
Networking permitted without license from IHS
Order Number: 02178406
Sold to:BORSIG BOILER SYSTEMS SDN BHD [700166108751],
Not for Resale,2017-11-28 02:38:15 UTC

B.2.5 Safety precautions

B.2.5.1 General

a) Safe assembly, set-up and turn-off procedures.

b) Safe control of welding fumes and gases.

c) Personal protection.

d) Fire hazards.

e) Welding in confined spaces.

f) Awareness of welding environment.

B.2.5.2 Oxyacetylene welding

a) Safe storage, handling and use of compressed gases.

b) Leak detection on gas hoses and fittings.

c) Procedure to be taken in the event of a flashback.

B.2.5.3 All arc welding processes

a) Environment of increased hazard electric shock.

b) Radiation from the arc.

c) Effects of stray arcing.

B.2.5.4 Gas-shielded metal-arc welding

a) Safe storage, handling and use of compressed gases.

b) Leak detection on gas hoses and fittings.

B.2.6 Welding sequences/procedures

Appreciation of welding procedure requirements and the influence of welding parameters.

B.2.7 Joint preparation and weld representation

a) Conformity of joint preparation to the welding procedure specification (WPS).

b) Cleanliness of fusion faces.

B.2.8 Weld imperfections

a) Identification of imperfections.

b) Causes.

c) Prevention and remedial action.

B.2.9 Welder qualification

The welder shall be aware of the range of the qualification.

Copyright British Standards Institution
Provided by IHS Markit under license with BSI - Uncontrolled Copy
No reproduction or networking permitted without license from IHS
Order Number: 02178406
Sold to:BORSIG BOILER SYSTEMS SDN BHD [700166106751],
Not for Resale,2017-11-28 02:38:15 UTC
© ISO 2012 – All rights reserved

Annex C
(informative)

FW/BW test assembly option

See Figure C.1.

Dimensions in millimetres

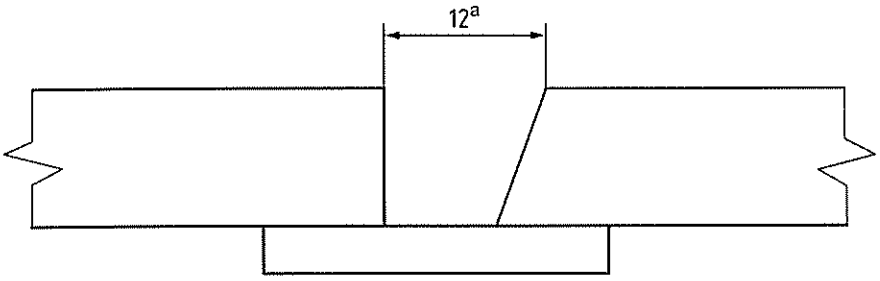

[a] Gap.

Figure C.1 — Combined FW/BW test piece

© ISO 2012 – All rights reserved
reserved
Standards Malaysia
Licensed under license with BSI - Uncontrolled Copy
Networking permitted without license from IHS
Order Number: 02178406
Sold to:BORSIG BOILER SYSTEMS SDN BHD [700166106751],
Not for Resale,2017-11-28 02:38:15 UTC

Bibliography

[1] ISO 636, *Welding consumables — Rods, wires and deposits for tungsten inert gas welding of non-alloy and fine-grain steels — Classification*

[2] ISO 2560, *Welding consumables — Covered electrodes for manual metal arc welding of non-alloy and fine grain steels — Classification*

[3] ISO 3580, *Welding consumables — Covered electrodes for manual metal arc welding of creep-resisting steels — Classification*

[4] ISO 3581, *Welding consumables — Covered electrodes for manual metal arc welding of stainless and heat-resisting steels — Classification*

[5] ISO 9000:2005, *Quality management systems — Fundamentals and vocabulary*

[6] ISO 14171, *Welding consumables — Solid wire electrodes, tubular cored electrodes and electrode/flux combinations for submerged arc welding of non alloy and fire grain steels — Classification*

[7] ISO 14172, *Welding consumables — Covered electrodes for manual metal arc welding of nickel and nickel alloys — Classification*

[8] ISO 14341, *Welding consumables — Wire electrodes and weld deposits for gas shielded metal arc welding of non alloy and fine grain steels — Classification*

[9] ISO 14343, *Welding consumables — Wire electrodes, strip electrodes, wires and rods for arc welding of stainless and heat resisting steels — Classification*

[10] ISO 14732, *Welding personnel — Qualification testing of welding operators for fully mechanized welding and weld setters for fully mechanized welding and automatic welding of metallic materials*

[11] ISO 15614-1, *Specification and qualification of welding procedures for metallic materials — Welding procedure test — Part 1: Arc and gas welding of steels and arc welding of nickel and nickel alloys*

[12] ISO 15607, *Specification and qualification of welding procedures for metallic materials — General rules*

[13] ISO 16834, *Welding consumables — Wire electrodes, wires, rods and deposits for gas-shielded arc welding of high strength steels — Classification*

[14] ISO 17632, *Welding consumables — Tubular cored electrodes for gas shielded and non-gas shielded metal arc welding of non-alloy and fine grain steels — Classification*

[15] ISO 17633, *Welding consumables — Tubular cored electrodes and rods for gas shielded and non-gas shielded metal arc welding of stainless and heat-resisting steels — Classification*

[16] ISO 17634, *Welding consumables — Tubular cored electrodes for gas shielded metal arc welding of creep-resisting steels — Classification*

[17] ISO 17635, *Non-destructive testing of welds — General rules for metallic materials*

[18] ISO 17639, *Destructive tests on welds in metallic materials — Macroscopic and microscopic examination of welds*

[19] ISO 17640, *Non-destructive testing of welds — Ultrasonic testing — Techniques, testing levels, and assessment*

opyright British Standards Institution
rovided by IHS Markit under license with BSI - Uncontrolled Copy
o reproduction or networking permitted without license from IHS
Order Number: 02178406
Sold to:BORSIG BOILER SYSTEMS SDN BHD [700166106751],
Not for Resale,2017-11-28 02:38:15 UTC
© ISO 2012 – All rights reserved

[20] ISO 18274, *Welding consumables — Solid wire electrodes, solid strip electrodes, solid wires and solid rods for fusion welding of nickel and nickel alloys — Classification*

[21] ISO 18275, *Welding consumables — Covered electrodes for manual metal arc welding of high-strength steels — Classification*

[22] ISO 18276, *Welding consumables — Tubular cored electrodes for gas-shielded and non-gas-shielded metal arc welding of high-strength steels — Classification*

[23] ISO 21952, *Welding consumables — Wire electrodes, wires, rods and deposits for gas shielded arc welding of creep-resisting steels — Classification*

[24] ISO 24598, *Welding consumables — Solid wire electrodes, tubular cored electrodes and electrode-flux combinations for submerged arc welding of creep-resisting steels — Classification*

[25] ISO 26304, *Welding consumables — Solid wire electrodes, tubular cored electrodes and electrode-flux combinations for submerged arc welding of high strength steels — Classification*

© ISO 2012 – All rights reserved

Copyright British Standards Institution
Provided by IHS Markit under license with BSI - Uncontrolled Copy
No reproduction or networking permitted without license from IHS

Order Number: 02178406
Sold to:BORSIG BOILER SYSTEMS SDN BHD [700166106751],
Not for Resale,2017-11-28 02:38:15 UTC

NO COPYING WITHOUT BSI PERMISSION EXCEPT AS PERMITTED BY COPYRIGHT LAW

British Standards Institution (BSI)

BSI is the national body responsible for preparing British Standards and other standards-related publications, information and services.

BSI is incorporated by Royal Charter. British Standards and other standardization products are published by BSI Standards Limited.

About us

We bring together business, industry, government, consumers, innovators and others to shape their combined experience and expertise into standards -based solutions.

The knowledge embodied in our standards has been carefully assembled in a dependable format and refined through our open consultation process. Organizations of all sizes and across all sectors choose standards to help them achieve their goals.

Information on standards

We can provide you with the knowledge that your organization needs to succeed. Find out more about British Standards by visiting our website at bsigroup.com/standards or contacting our Customer Services team or Knowledge Centre.

Buying standards

You can buy and download PDF versions of BSI publications, including British and adopted European and international standards, through our website at bsigroup.com/shop, where hard copies can also be purchased.

If you need international and foreign standards from other Standards Development Organizations, hard copies can be ordered from our Customer Services team.

Copyright in BSI publications

All the content in BSI publications, including British Standards, is the property of and copyrighted by BSI or some person or entity that owns copyright in the information used (such as the international standardization bodies) and has formally licensed such information to BSI for commercial publication and use.

Save for the provisions below, you may not transfer, share or disseminate any portion of the standard to any other person. You may not adapt, distribute, commercially exploit, or publicly display the standard or any portion thereof in any manner whatsoever without BSI's prior written consent.

Storing and using standards

Standards purchased in soft copy format:

- A British Standard purchased in soft copy format is licensed to a sole named user for personal or internal company use only.
- The standard may be stored on more than 1 device provided that it is accessible by the sole named user only and that only 1 copy is accessed at any one time.
- A single paper copy may be printed for personal or internal company use only.

Standards purchased in hard copy format:

- A British Standard purchased in hard copy format is for personal or internal company use only.
- It may not be further reproduced – in any format – to create an additional copy. This includes scanning of the document.

If you need more than 1 copy of the document, or if you wish to share the document on an internal network, you can save money by choosing a subscription product (see 'Subscriptions').

Reproducing extracts

For permission to reproduce content from BSI publications contact the BSI Copyright & Licensing team.

Subscriptions

Our range of subscription services are designed to make using standards easier for you. For further information on our subscription products go to bsigroup.com/subscriptions.

With **British Standards Online (BSOL)** you'll have instant access to over 55,000 British and adopted European and international standards from your desktop. It's available 24/7 and is refreshed daily so you'll always be up to date.

You can keep in touch with standards developments and receive substantial discounts on the purchase price of standards, both in single copy and subscription format, by becoming a **BSI Subscribing Member**.

PLUS is an updating service exclusive to BSI Subscribing Members. You will automatically receive the latest hard copy of your standards when they're revised or replaced.

To find out more about becoming a BSI Subscribing Member and the benefits of membership, please visit bsigroup.com/shop.

With a **Multi-User Network Licence (MUNL)** you are able to host standards publications on your intranet. Licences can cover as few or as many users as you wish. With updates supplied as soon as they're available, you can be sure your documentation is current. For further information, email subscriptions@bsigroup.com.

Revisions

Our British Standards and other publications are updated by amendment or revision.

We continually improve the quality of our products and services to benefit your business. If you find an inaccuracy or ambiguity within a British Standard or other BSI publication please inform the Knowledge Centre.

Useful Contacts

Customer Services
Tel: +44 345 086 9001
Email (orders): orders@bsigroup.com
Email (enquiries): cservices@bsigroup.com

Subscriptions
Tel: +44 345 086 9001
Email: subscriptions@bsigroup.com

Knowledge Centre
Tel: +44 20 8996 7004
Email: knowledgecentre@bsigroup.com

Copyright & Licensing
Tel: +44 20 8996 7070
Email: copyright@bsigroup.com

BSI Group Headquarters

389 Chiswick High Road London W4 4AL UK

bsi.

Copyright British Standards Institution
Provided by IHS Markit under license with BSI - Uncontrolled Copy
No reproduction or networking permitted without license from IHS

Order Number: 02178406
Sold to:BORSIG BOILER SYSTEMS SDN BHD [700166106751],
Not for Resale,2017-11-28 02:38:15 UTC