Montgomery County Community College

Department of Engineering

EGR 211 – Final Project

Electronic Combination Lock System

Group Members: Gabriel Moody, David Williams, Caleb Karlson, Tyler Jackson

Date: 15 December 2025

Instructor: Professor Moorthy

1. Objective

The objective of this project is to design, build, and demonstrate an electronic combination lock system using analog and digital circuit concepts learned in EGR 211. The system validates a correct combination of switch inputs by monitoring node voltages and using comparators, timers, operational amplifiers, and an Arduino for logic control. The project emphasizes an analog design focus, practical circuit construction, voltage and timing measurements, and verification of intermediate circuit behavior using lab instruments.

2. System Overview

This section presents a high-level overview of the combination lock system. The circuit consists of a multi-switch voltage network, comparator-based decision stages, timing circuits for visual and audible outputs, and an Arduino-based monitoring and alarm subsystem.

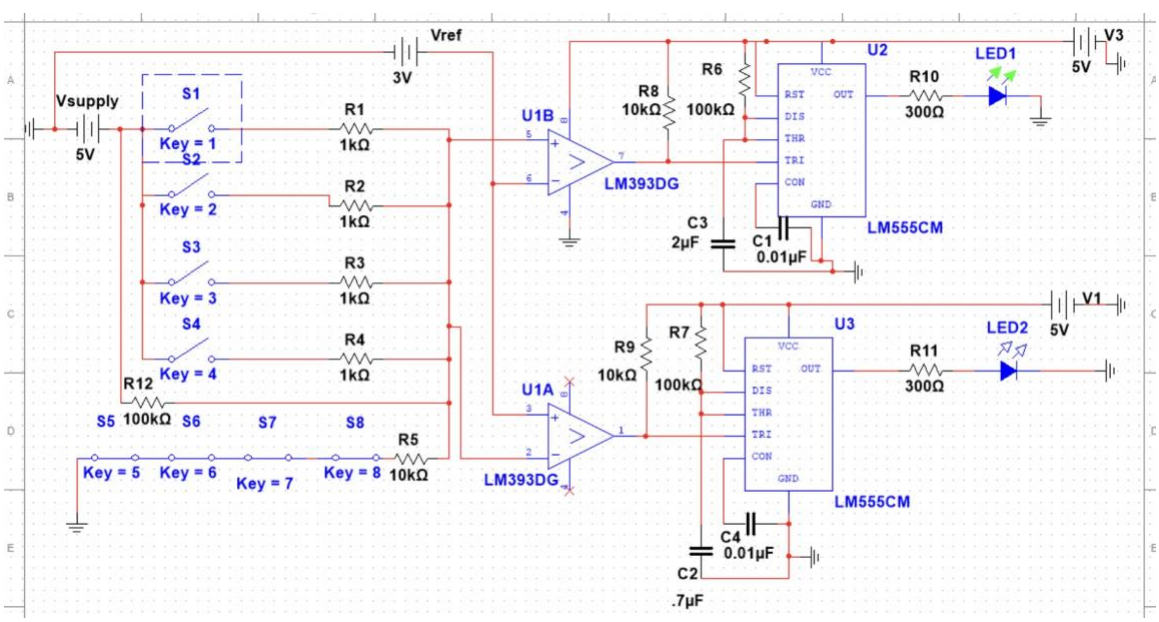

Figure 1: Multisim Diagram

2.1 Tumber System

The circuit begins with what Professor Vardakas aptly called the “Tumbler Network.”

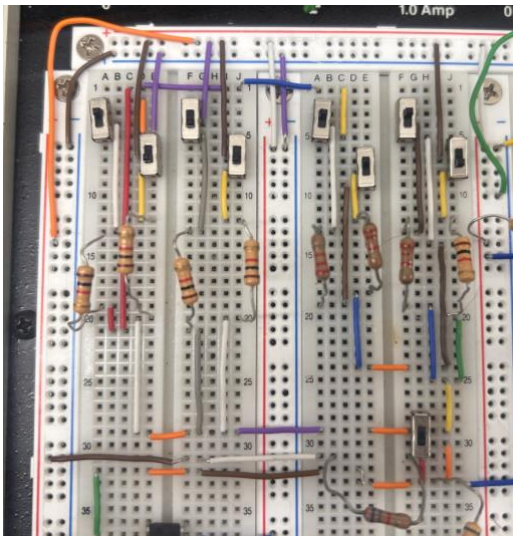

Figure 2: Tumbler System

The tumbler system is composed of nine switches connected to a single combination node: eight “keypad” switches used to enter the code, and one confirm switch used to evaluate the input. Four of the keypad switches form individual branches connected from the supply voltage through a switch and resistor to the combination node. The remaining four keypad switches form a series path to ground, with each switch followed by a resistor before meeting at the same node.

This arrangement creates a voltage divider network whose output depends on which switches are closed at the time the confirm switch is pressed. When the correct combination of switches is selected, the series path to ground dominates, pulling the combination node voltage low. For incorrect combinations, one or more of the supply-side branches remain active, causing the node voltage to rise above a defined threshold.

The confirm switch isolates the tumbler network from the rest of the circuit until the user intentionally submits an input. Once pressed, the voltage at the combination node is passed to the comparator stage, where it is evaluated as either a valid (low-voltage) or invalid (high-voltage) code. This method allows a purely analog switch-and-resistor network to represent a digital “correct or incorrect” decision using voltage levels rather than logic gates.

2.2 Win system

When the correct combination of switches is entered and the confirm switch is pressed, the voltage at the combination node is driven below a predefined threshold. This low-voltage condition is detected by a comparator configured to identify valid codes. When this condition is met, the comparator output transitions high, indicating that the correct code has been entered.

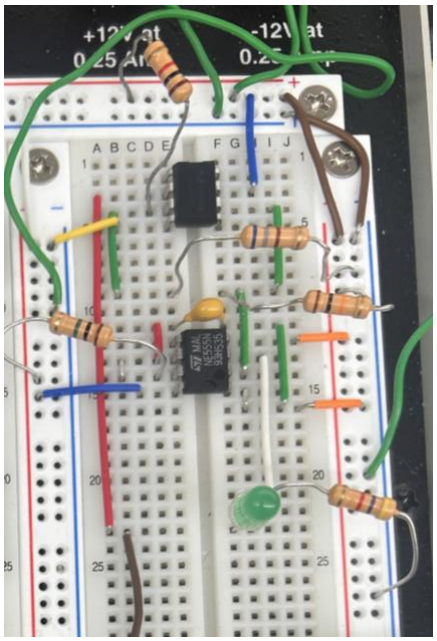

Figure 3: Win Branch

The comparator output is connected to a 555-timer configured to generate a timed output pulse. When triggered, the 555 timer drives an LED that represents the unlocking of the system. The LED remains on for a fixed duration determined by the resistor–capacitor network of the timer, after which it automatically turns

off, returning the system to its idle state. This timing behavior ensures that the unlock indication is temporary and does not remain active indefinitely.

During testing, it was observed that the 555 timer would also activate when the confirm switch is released after a successful entry. This occurs because the comparator output undergoes a second transition as the combination node voltage returns from low to high. Since the 555 timer responds to voltage threshold crossings rather than steady logic levels, both transitions can trigger the timer. From a system perspective, this behavior is acceptable, as the initial activation corresponds to unlocking the system, while the second activation represents the system returning to a locked state once the confirm switch is released.

2.3 Lose System

The lose branch is used to indicate that an incorrect combination has been entered. In the default, locked state, the voltage at the combination node stays above the comparator threshold, which causes the lose branch to remain active. This keeps the red LED on, showing that the system is still locked.

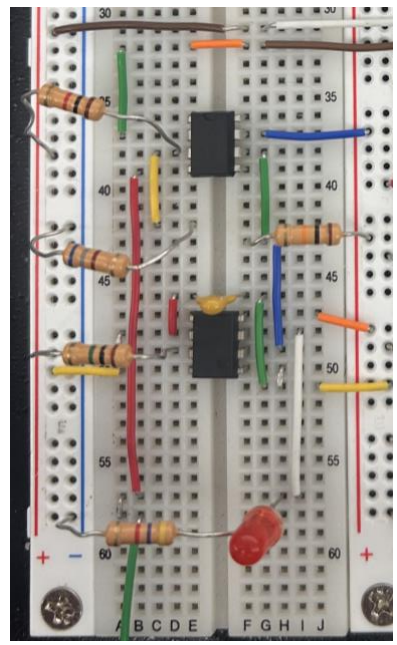

Figure 4: Lose Branch

The comparator output is connected to a 555 timer that controls the LED. Even though the voltage at the input of the timer can be negative, the output of the timer remains high during normal operation. From observation, the timer stays in this state unless it is specifically triggered by a change in the comparator output. Because of this behavior, the LED stays on while the system is locked.

When the correct combination is entered and the confirm switch is pressed, the comparator output changes and briefly triggers the 555 timer. This causes the LED to turn off for as long as the correct code is active. When a new code is entered, the timer returns to its original state and the LED turns back on. This behavior clearly indicates a transition from an incorrect code to a correct one, while ensuring the lose indicator remains active otherwise.

2.4 Arduino Controlled Systems

The Arduino is used to monitor the voltage at the combination node and keep track of how many incorrect codes have been entered. Each time the confirm switch is pressed and the voltage rises above the expected level, the Arduino interprets this as an incorrect combination. When this occurs, an internal counter is incremented by one.

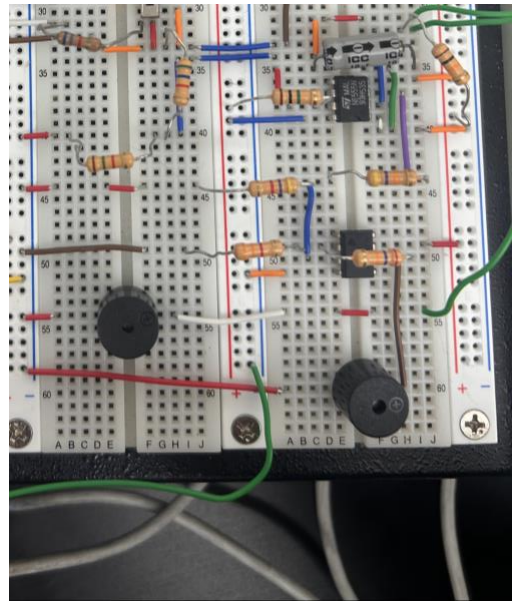

Figure 5: Arduino System and Buzzers

For the first and second incorrect attempts, the Arduino sends a very short pulse from one of its output pins to a buzzer on the board. This produces a brief audible sound, providing immediate feedback that an incorrect code was entered. The same behavior occurs again when the counter reaches two, clearly indicating repeated incorrect attempts.

When the counter reaches three, the Arduino changes its behavior. Instead of triggering the short buzzer pulse, the Arduino activates a dedicated alarm output pin. This pin is normally held high, but when the third incorrect attempt occurs, it drops low. This voltage change triggers a 555 timer, which drives an amplifying operational amplifier connected to a buzzer. As a result, a continuous alarm sound is produced for approximately fifteen seconds. After the alarm cycle completes, the Arduino resets the counter, returning the system to its normal monitoring state.

3. Component Data and Measurements

This section contains raw measured and calculated data for each major component in the system. All results are presented in tables without interpretation to serve as a reference for later analysis.

3.1 Switch Tumbler Voltage Levels

Table: Node voltages for all valid and invalid switch combinations.

Table 1: Tumbler Combinations and Outputs

Switch Positions	**Output Voltage**	**Output Scenario**
All switches open	5.84V	Lock
All switches closed	11.24V	Lock
All incorrect	11.58V	Lock
3 incorrect 1 correct	11.45V	Lock
2 incorrect 2 correct	11.22V	Lock
1 incorrect 3 correct	10.58V	Lock
All correct	4.22V	Unlock

3.2 Comparator Thresholds and Outputs

Table: Comparator reference voltages, input voltages, and output states.

Table 2: Comparator and Op-Amp

Comparator	Type	**Condition**	**V_{ref} (V)**	**V_{in} (V)**	**V_{out} (V)**
Alarm	Non-Inverting amplifying op-amp	On	0	.936	5.9
		Off	0	0.08	.19
Win	Inverting Comparator	Correct	4.87	4.22	11.98
		Incorrect	4.87	> 4.87	−11.99
Lose	Non-Inverting	Correct	4.90	9.64–11.57	−0.87
		Incorrect	4.90	4.22	11.98

3.3 555 Timer Measurements

Tables documenting timing behavior for each NE555 timer, including pulse width, delay time, and output voltage levels.

Table 3: NE555 Timer Component Values

Branch	**R (Ω)**	**C (µF)**	**Calculated Pulse Time (s)**	**Timed Pulse (s)**
Lose	1 MΩ	1.0	1.1	0.8
Win	1 MΩ	2.2	2.4	2.1
Alarm	1 MΩ	10	11.0	14.6

Table 4: NE555 Timer Input/Output Values

Branch	**Input State**	**Input Voltage (V)**	**Output Voltage (V)**
Lose	Locked (Idle)	−0.87	8.5
	Unlocked	11.98	0
Win	Locked (Idle)	−1.15	0
	Unlocked	11.98	10.68
Alarm	Off (Idle)	5.08	0.01
	On (Triggered)	0.03	10.77

4. Data Visualization and Oscilloscope Results

This section presents oscilloscope measurements that visually confirm the behavior of the combination lock system under different operating conditions. These waveforms provide time-based evidence of how the circuit responds to correct inputs, incorrect inputs, and repeated failed attempts.

4.1 Combination Node Voltage for Different Code States

Figure 6 shows the voltage at the combination node for three different switch configurations: fully correct, partially correct, and fully incorrect. When the correct code is entered and the confirm switch is pressed, the node voltage drops to its lowest level, placing it clearly below the comparator threshold. For partially correct and fully incorrect inputs, the node voltage remains high and does not cross the threshold.

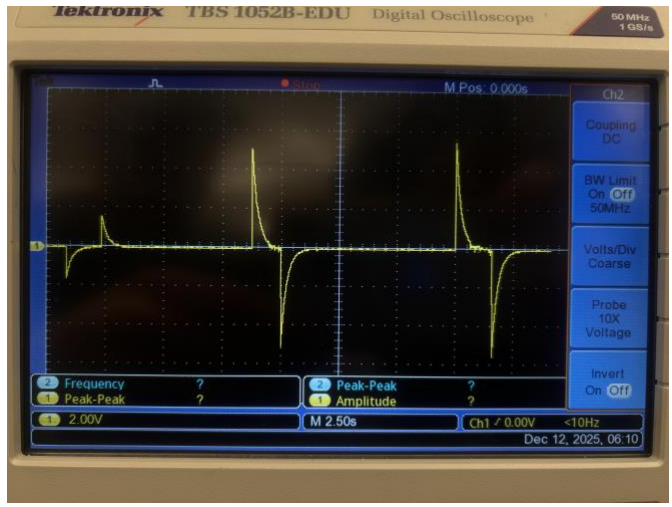

Figure 6: Output Node with Multiple Scenarios

This visualization confirms that the tumbler network produces clearly separated voltage levels depending on the entered combination. The difference between the correct and incorrect cases is large enough to allow reliable detection by the comparator, even with component tolerances and noise present in the system.

4.2 Win and Lose Timer Outputs During Code Evaluation

Figure 7 shows the outputs of the win-branch (blue) and lose-branch (yellow) 555 timers during a correct code entry. When the confirm switch is pressed with the correct combination selected, the win timer output transitions high while the lose timer output pulses low, indicating a successful unlock condition.

Figure 7: NE555 Timers Responding to Correct Code

When the confirm switch is released, both timer outputs briefly transition again. This occurs because the voltage at the combination node changes as the system returns to its idle state, causing the comparators to switch once more. Although both timers respond to this transition, the behavior is acceptable for the

system since the initial transition represents unlocking and the later transition corresponds to relocking the system.

This waveform confirms that the win and lose indicators respond correctly and oppositely to the same input condition, as intended by the design.

4.3 Audible Feedback and Alarm Behavior

Figure 8 shows the voltage signals driving the buzzer system during multiple incorrect attempts. The first two incorrect entries produce short, narrow pulses, corresponding to brief beeps that indicate an invalid code. These pulses are clearly distinct and separated in time.

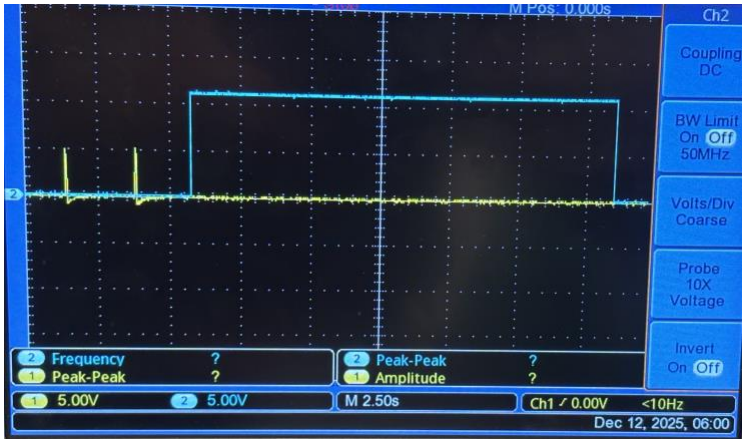

Figure 8: Incorrect Code Response and Alarm System

After the third incorrect attempt, a different signal becomes active. Instead of a short pulse, a long high-level output is observed, corresponding to the alarm condition. This sustained signal drives the alarm buzzer for an extended duration, clearly differentiating it from the earlier warning beeps.

This visualization confirms that the Arduino correctly tracks failed attempts and switches from warning feedback to alarm activation after multiple incorrect entries.