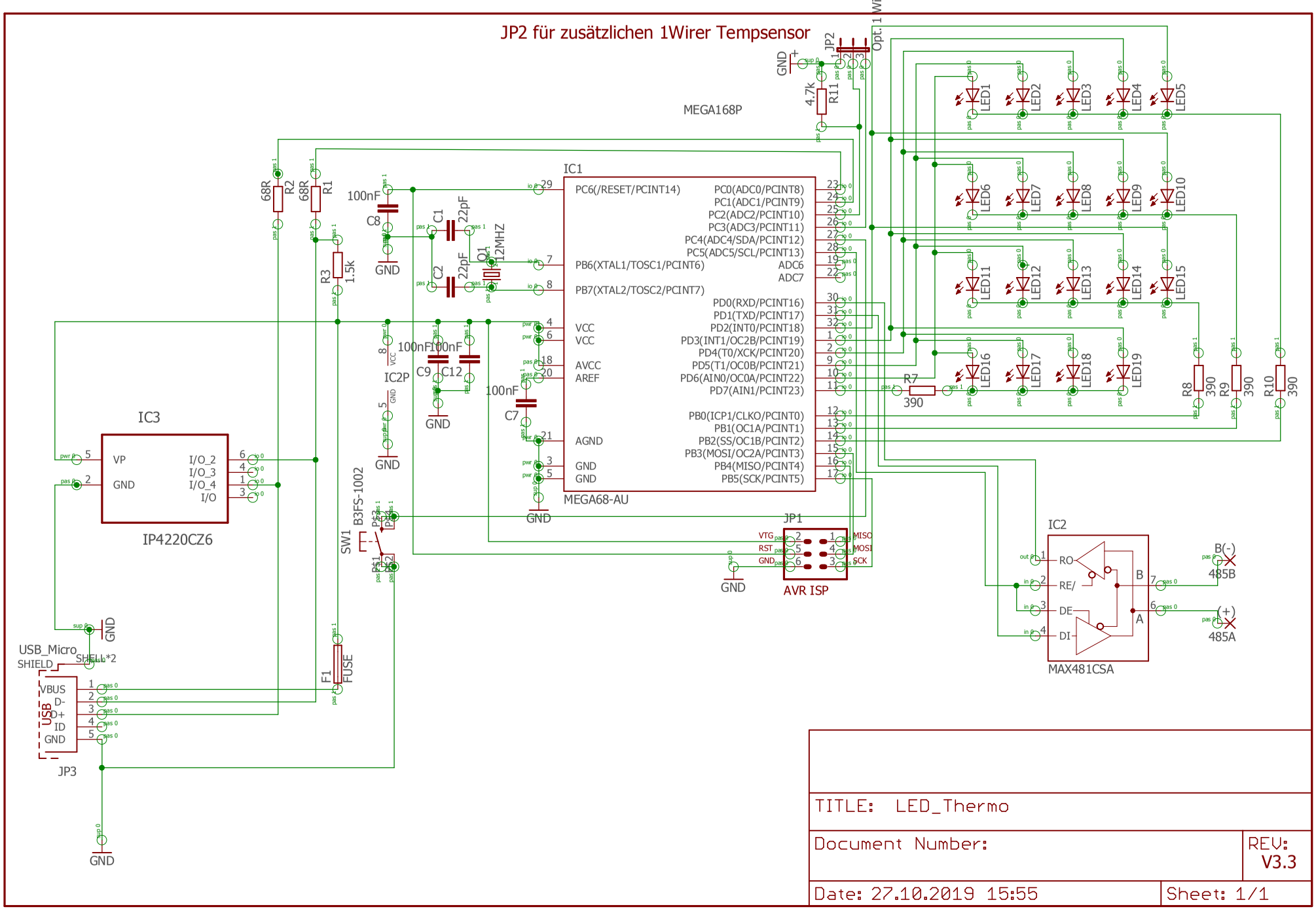

TITLE: LED_Thermo

Document Number:

REV: V3.3

Date: 27.10.2019 15:55

Sheet: 1/1