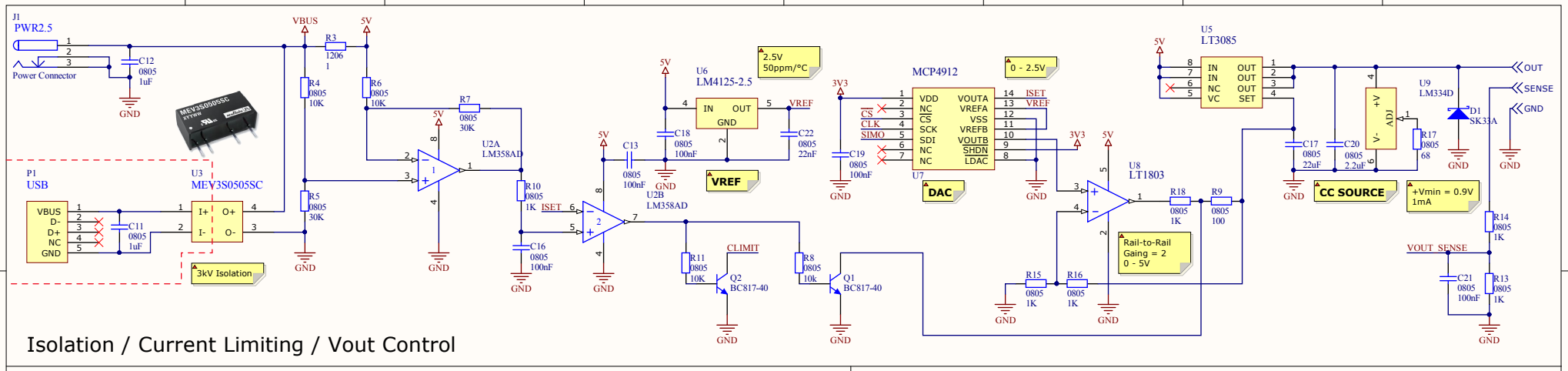

Isolation / Current Limiting / Vout Control

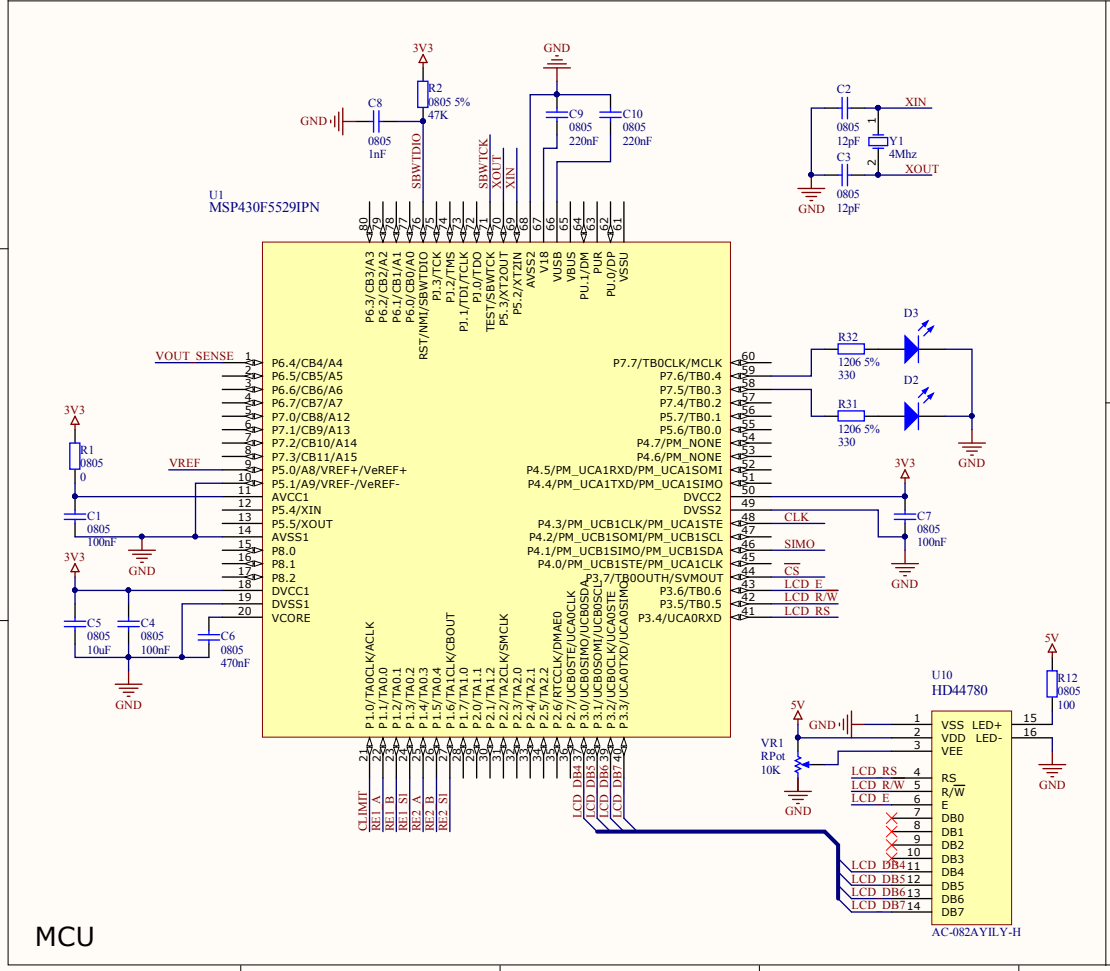

MCU

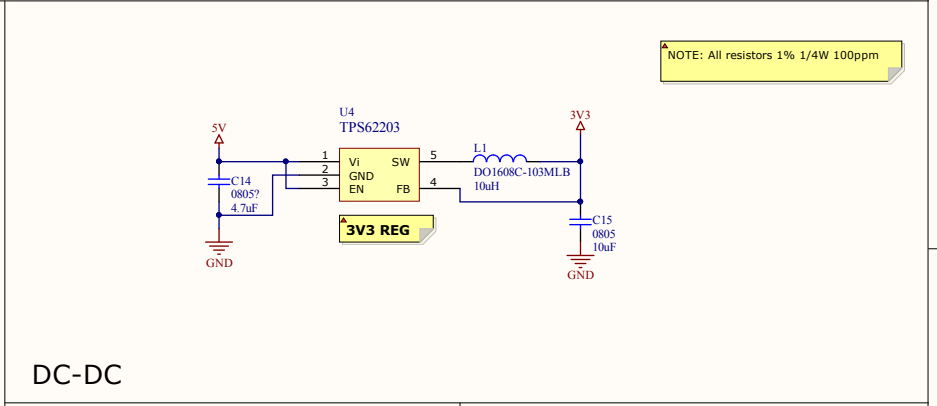

DC-DC

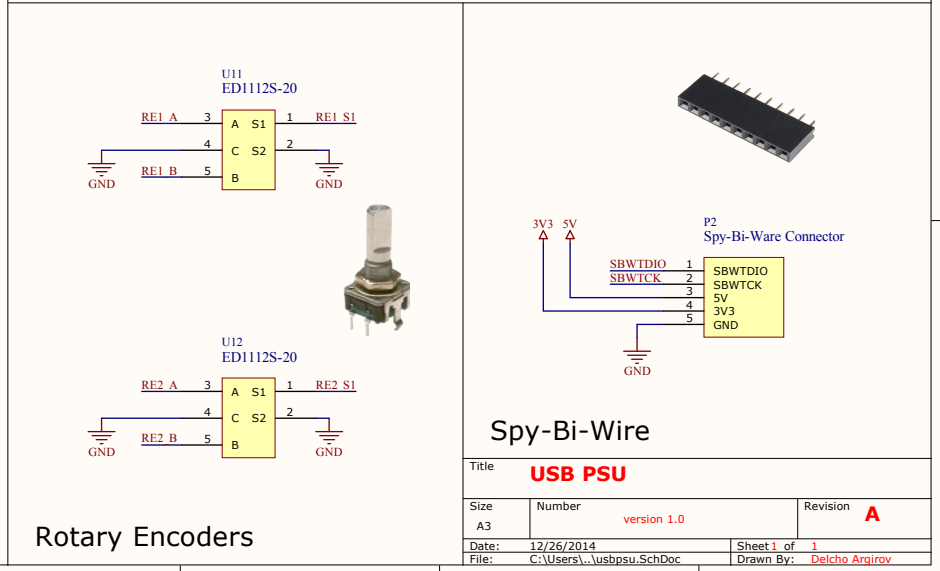

Rotary Encoders

Spy-Bi-Wire

Title	USB PSU		
Size A3	Number version 1.0		Revision A
Date: 12/26/2014		Sheet 1 of 1	
File: C:\Users\..\usbpsu.SchDoc		Drawn By: Delcho Argirov	