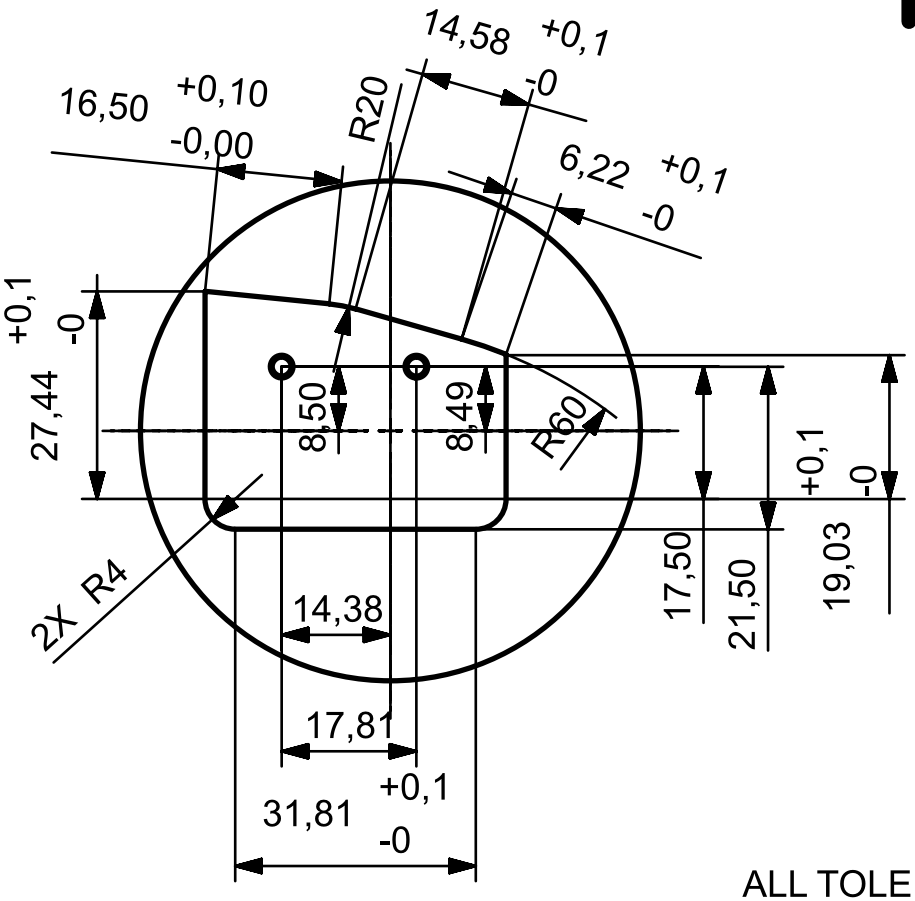

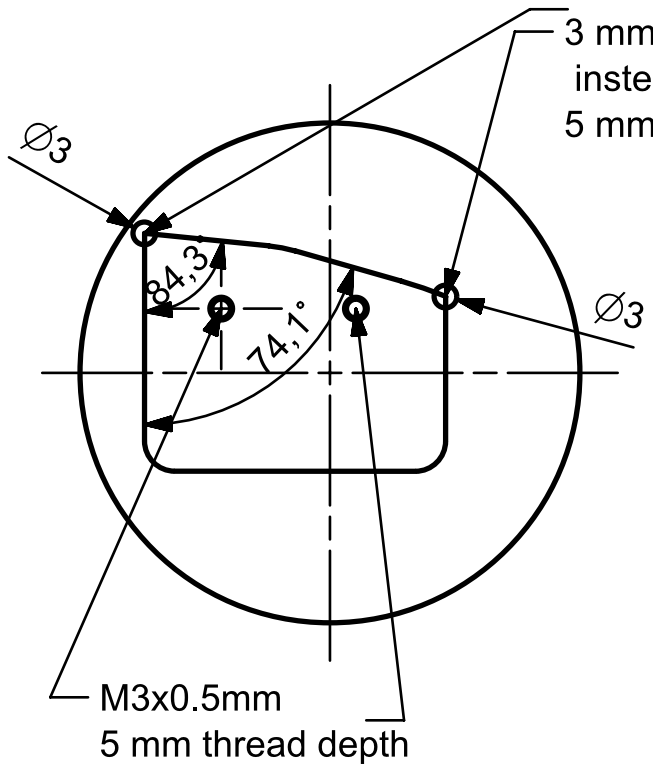

ALL TOLERANCES +-0.01 mm
UNLESS MENTIONED OTHERWISE
MATERIAL:Aluminium

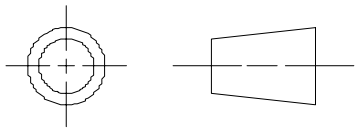

ALL DIMENSIONS IN MM

SIEMENS		THIS DRAWING HAS BEEN PRODUCED USING AN EXAMPLE TEMPLATE PROVIDED BY SIEMENS PLM SOFTWARE
FIRST ISSUED	13/2/2023	TITLE: flat mandible adaptor (Etched IN 0)
DRAWN BY	Zelin Li	
CHECKED BY	Zelin Li	
APPROVED BY		SIZE: A4 / DRG NO.: flat_adaptor_top / SHEET REV: A
		SCALE 1:1 / SHEET 1 OF 2

A4

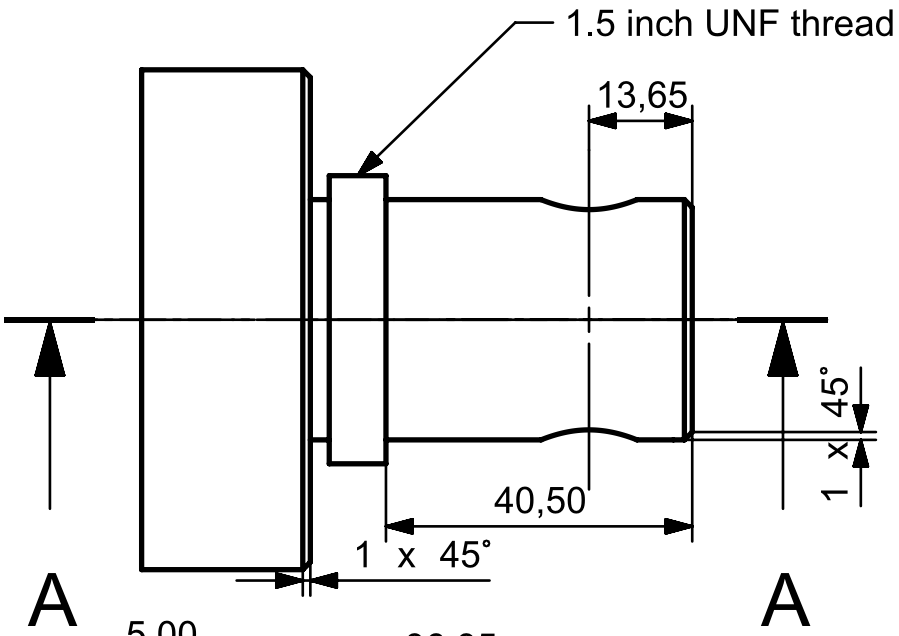

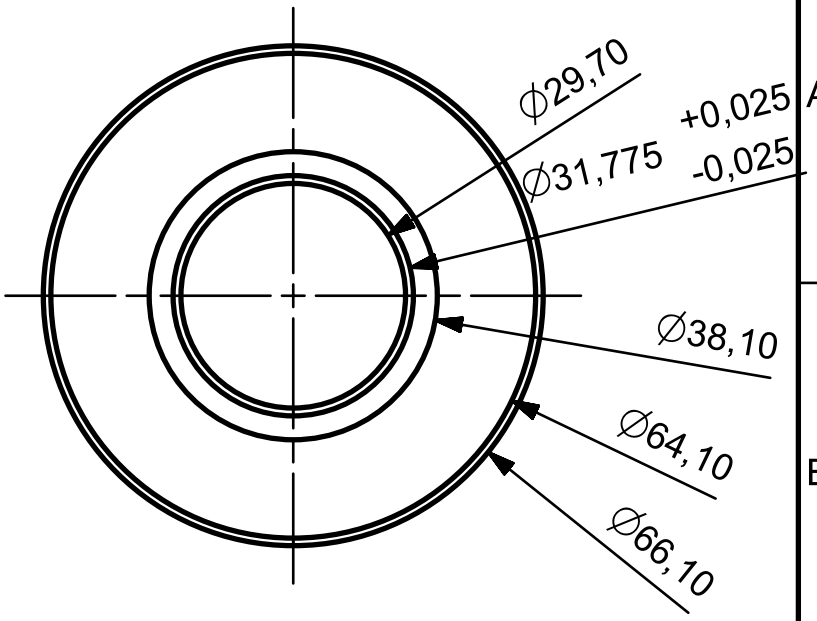

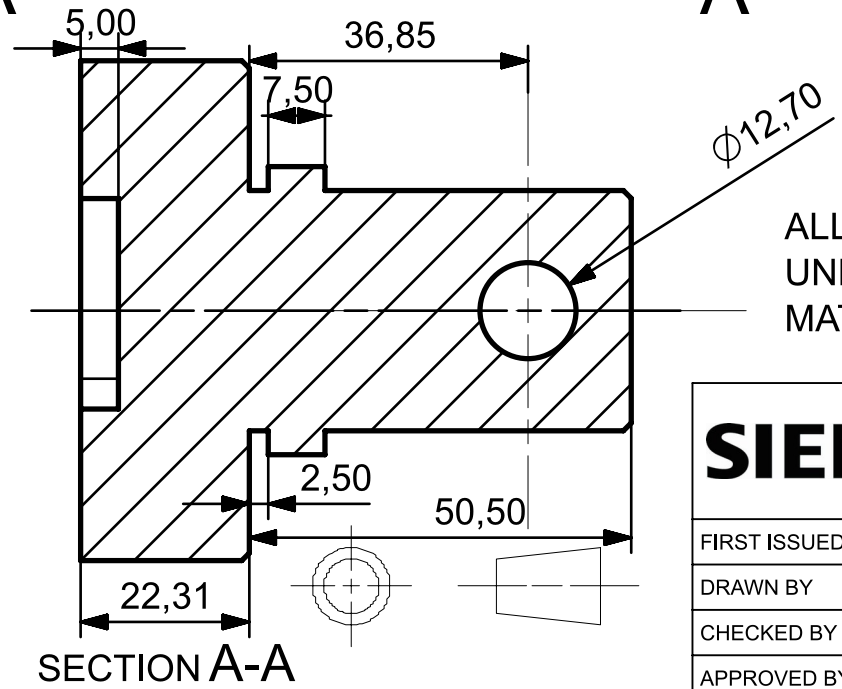

ALL TOLERANCES +-0.01 mm
UNLESS MENTIONED OTHERWISE
MATERIAL:Aluminium

ALL DIMENSIONS IN MM

SIEMENS

THIS DRAWING HAS BEEN PRODUCED USING AN EXAMPLE TEMPLATE PROVIDED BY SIEMENS PLM SOFTWARE

FIRST ISSUED	13/2/2023
DRAWN BY	Zelin Li
CHECKED BY	Zelin Li
APPROVED BY	

TITLE: flat mandible adaptor (Etched IN 0)

SIZE	DRG NO.	SHEET REV
A4	flat_adaptor_top	A

SCALE 1:1 | SHEET 2 OF 2

A4