ARCHITECT:
COLE ARCHITECTS
COLE ARCHITECTS, PLLC | 802 W. BANNOCK SUITE 208
BOISE, IDAHO 83702 | (208) 345-1800

TCA
architecture • planning

CITY OF BOISE FIRE STATION 4

CONTRACT DRAWINGS FOR:

CITY OF BOISE FIRE STATION 4

8485 W Ustick Rd
Boise, ID 83704

PROJECT NO. *15-27*
PLOT DATE: 02.02.16

PROJECT PHASE:
75% CD'S

CIVIL
LANDSCAPE
ARCHITECTURAL
STRUCTURAL
ELECTRICAL
MECHANICAL
PLUMBING

PROJECT CONTACT INFORMATION:

OWNER
CITY OF BOISE
150 N CAPITOL BLVD.
BOISE, ID 83702

CRAIG JOHNSON
208.384.3945
cljohnson@cityofboise.org

ARCHITECT OF RECORD
COLE ARCHITECTS
802 W BANNOCK STE 208
BOISE, ID 83702

STAN COLE
208.345.1800
stan@colearchitects.net

JON CHATFIELD
208.345.1800
jon@colearchitects.net

ARCHITECT DESIGN CONSULTANT
TCA ARCHITECTURE • PLANNING
6211 ROOSEVELT WAY NE
SEATTLE, WA 98115

BRIAN HARRIS
206.522.3830 EXT 101
brian@tca-inc.com

CIVIL & LANDSCAPE
BRECKON LAND DESIGN
181 WEST 50TH ST
BOISE, ID 83711

JON BRECKON
208.376.5153
jbreckon@breconld.com

STRUCTURAL
KPFF
412 PARKCENTER BLVD
BOISE, ID 83706

JORDAN TERRY
208.336.9511
jterry@kpff-id.com

MECHANICAL/ELECTRICAL/PLUMBING
MUSGROVE ENGINEERING, INC.
234 S. WHISPERWOOD WAY
BOISE, ID 83709

CHARLES PAULIN
208.384.0535 (1)
charlesp@musgrovepa.com

THAD MASON
208.384.0535 (303)
thadm@musgrovepa.com

CONTRACTOR
ENGINEERED STRUCTURES INCORPORATED
3330 E. LOUISE DR. STE 300
MERIDIAN, ID 83642

DUSTON HILGERT
208.362.3040
dustinhilgert@esiconstruction.com

NOT FOR CONSTRUCTION

G000

02.02.16 | 75% CD'S

C:\Users\jon\Documents\Revit\15-27 Fire Station 4\15-27 Fire Station 4_jchatfield.rvt
2/2/2016 4:12:33 PM

ABBREVIATIONS:

ABBREVIATION	DESCRIPTION
AB	ANCHOR BOLT
AFF	ABOVE FINISH FLOOR
ALUM	ALUMINUM
APPROX	APPROXIMATELY
BD	BOARD
BLDG	BUILDING
BM	BEAM
BOT	BOTTOM
BRG	BEARING
CJ	CONTROL/CONSTRUCTION JOINT
CLG	CEILING
CLR	CLEAR
CMU	CONCRETE MASONRY UNIT
COL	COLUMN
CONC	CONCRETE
CONN	CONNECTION
CONT	CONTINUOUS
CON'TR	CONTRACTOR
CTR	CENTER
DBL	DOUBLE
DEMO	DEMOLITION
DIA	DIAMETER
DIAG	DIAGONAL
DIM	DIMENSION
DN	DOWN
DWG	DRAWING
(E)	EXISTING
EA	EACH
ELEV	ELEVATION
EMB	EMBEDDED
EQ	EQUAL
EXP	EXPANSION
(F)	FUTURE
FB	FLAT BAR
FD	FLOOR DRAIN
FEC	FIRE EXTINGUISHER CABINET
FIN	FINISH
FLASH	FLASHING
FLR	FLOOR
FOB	FACE OF BRICK
FOF	FACE OF FOUNDATION
FOM	FACE OF MASONRY
FOS	FACE OF STUD
FT	FOOT/FEET
GA	GAUGE
GALV	GALVANIZED
GI	GALVANIZED IRON
GND	GROUND
GYP	GYPSUM
H	HIGH
HB	HOSE BIB
HM	HOLLOW METAL or HERMAN MILLER
HORIZ	HORIZONTAL
HP	HIGH POINT
HR	HOUR
HS	HIGH STRENGTH
HT	HEIGHT
ID	INSIDE DIAMETER
INSUL	INSULATION
JT	JOINT
LG	LONG
LLV	LONG LEG VERTICAL
MAX	MAXIMUM
MB	MACHINE BOLT
MECH	MECHANICAL
MET	METAL
MFR	MANUFACTURER
MIN	MINIMUM
MO	MASONRY OPENING
(N)	NEW
NIC	NOT IN CONTRACT
NO.	NUMBER
NTS	NOT TO SCALE
OC	ON CENTER
OD	OUTSIDE DIAMETER
OH	OPPOSITE HAND
OPNG	OPENING
OPP	OPPOSITE
PL	PLATE
PROJ	PROJECTION
PT	POINT
R	RISER
(R)	RELOCATED
RAD	RADIUS
RD	ROOF DRAIN
REF	REFERENCE
REINF	REINFORCEMENT, REINFORCED
REQ	REQUIREMENT
RO	ROUGH OPENING
RWC	RAIN WATER CONDUCTOR OR DOWNSPOUT
SECT	SECTION
SIM	SIMILAR
SHT	SHEET
SPEC	SPECIFICATION
SQ	SQUARE
STD	STANDARD
STL	STEEL
STRL	STRUCTURAL
TEL	TELEPHONE
TO	TOP OF
TOC	TOP OF CURB
TOJ	TOP OF JOIST
TOS	TOP OF STEEL
TOW	TOP OF WALL
TYP	TYPICAL
UNO	UNLESS NOTED OTHERWISE
VCT	VINYL COMPOSITION TILE
VERT	VERTICAL
W	WIDE
W/	WITH
WD	WOOD
WO	WIDTH OF OPENING
WP	WEATHERPROOF
WS	WOOD SCREW
W/S	WORKSURFACE
WT	WEIGHT
WWF	WELDED WIRE FABRIC

ARCHITECTURAL SYMBOLS

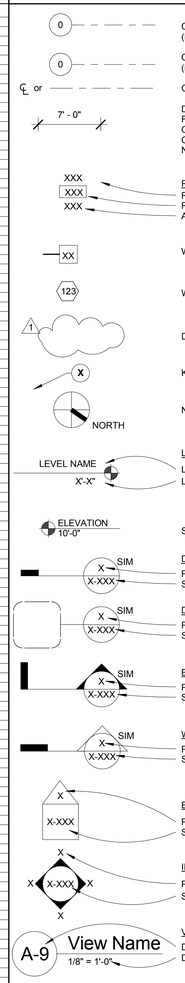

GENERAL PROJECT NOTES:

A. GENERAL PROJECT NOTES APPLY TO ALL SHEETS & SPECIFICATIONS. CONTRACTOR AND SUB-CONTRACTORS ARE TO REVIEW ALL CONTRACT DOCUMENTS AND COORDINATE THEIR SCOPE OF WORK WITH THE GENERAL CONTRACTOR AND OTHER SUB-CONTRACTORS. INFORMATION COMMON TO SEVERAL DRAWINGS MAY BE NOTED ON ONLY ONE. CONTRACTOR IS RESPONSIBLE FOR ENTIRE SET OF DOCUMENTS..

B. IF INFORMATION ON SEPARATE SHEETS OR DETAILS INDICATE CONFLICTING INFORMATION OR QUESTIONS ABOUT THE SCOPE OF WORK OR DESIGN INTENT, THE CONTRACTOR IS TO NOTIFY THE ARCHITECT IMMEDIATELY BEFORE BIDS ARE FINALIZED TO CLARIFY SCOPE OF WORK. IF THE SCOPE OF WORK REMAINS UNCLEAR THEN THE CONTRACTOR OR SUB-CONTRACTOR IS INSTRUCTED TO PRICE AND PROVIDE THE MOST EXPENSIVE SCOPE OF WORK OPTION IN THEIR BID.

C. WHERE CONFLICTING DIRECTION IS GIVEN WITHIN THE SPECIFICATIONS AND DRAWINGS THE CONTRACTOR IS TO NOTIFY THE ARCHITECT IMMEDIATELY BEFORE BIDS ARE FINALIZED TO CLARIFY SCOPE OF WORK. IF THE SCOPE OF WORK REMAINS UNCLEAR THEN THE CONTRACTOR OR SUB-CONTRACTOR IS INSTRUCTED TO PRICE AND PROVIDED THE MOST EXPENSIVE SCOPE OF WORK OPTION IN THEIR BID.

D. COORDINATE CONSTRUCTION ACTIVITY WITH PROJECT SPECIFICATIONS. ALL SPECIFICATIONS, REFERENCED IN DRAWINGS OR NOT, SHALL BE PART THIS PROJECTS SCOPE OF WORK. MISNUMBERED (OR MISLABELED) SPECIFICATIONS OR REFERENCES ARE ALSO PART OF THIS PROJECTS SCOPE OF WORK AND SHALL BE BROUGHT TO THE ATTENTION OF THE ARCHITECT. THE CONTRACTOR IS RESPONSIBLE TO INCORPORATE ALL SPECIFICATIONS INTO THE PROJECTS SCOPE OF WORK.

E. ALL BUILDING COMPONENTS ARE TO BE INSTALLED PER THE MANUFACTURER INTENDED USE AND WRITTEN RECOMMENDATIONS. THIS INCLUDES, BUT IS NOT LIMITED TO: REQUIRED CLEARANCES, REQUIRED ATTACHMENT TECHNIQUES, FASTENING METHODS & APPROVED SUBSTRATES. CONTACT ARCHITECT IMMEDIATELY BEFORE PROCEEDING WITH INSTALLATION OF COMPONENTS THAT DO NOT MEET THE MANUFACTURER'S RECOMMENDATIONS.

F. UNLESS NOTED OTHERWISE CONSTRUCT CONSTRUCT CASEWORK PER STANDARDS ESTABLISED BY THE *ARCHITECTURAL WOODWORK STANDARDS* MOST CURRENT ADDITION. CONSTRUCT PER CUSTOM FINISH DESIGN STANDARDS.

G. FIRE SPRINKLER SYSTEM IS TO BE IN COMPLIANCE WITH ADOPTED VERSIONS OF NFPA 13 AND INTERNATIONAL BUILDING CODE, THE STATE FIRE MARSHAL AND LOCAL FIRE DEPARTMENT. WORK ON FIRE SPRINKLER SYSTEMS ARE TO BE CONDUCTED BY A LICENSED FIRE SPRINKLER CONTRACTOR. NEW SYSTEMS AND MODIFICATIONS TO EXISTING SYSTEMS REQUIRE SUBMISSION OF PLANS TO THE STATE FIRE MARSHAL'S OFFICE FOR REVIEW AND ACCEPTANCE PRIOR TO THE INSTALLATION OF ANY SYSTEM COMPONENTS.

H. SCREEN MECHANICAL SYSTEMS FROM TRANSFERRING DUST AND DEBRIS FROM PROJECT AREA TO THE REMAINDER OF THE BUILDING.

I. DO NOT SCALE DRAWINGS. IF SPECIFIC DIMENSIONS ARE NEEDED CONSULT ARCHITECT.

J. FIGURED DIMENSIONS TAKE PRECEDENCE OVER SCALED DRAWINGS. WHERE DISCREPANCIES OCCUR, THEY SHALL BE REPORTED TO ARCHITECT FOR RESOLUTION.

K. DETAILED DRAWINGS AND LARGER SCALE DRAWINGS TAKE PRECEDENCE OVER SMALLER SCALE DRAWINGS.

L. PROVIDE BLOCKING OR ATTACHMENT PLATES OR ANCHORS OR FASTENERS OF ADEQUATE SIZE AND NUMBER TO SECURELY ANCHOR EACH COMPONENT IN PLACE, ACCURATELY LOCATED AND ALIGNED WITH OTHER PORTIONS OF THE WORK. WHERE SIZE AND TYPE OF ATTACHMENTS ARE NOT INDICATED, VERIFY SIZE AND TYPE REQUIRED FOR LOAD CONDITIONS.

M. PROVIDE WALL BACKING FOR ALL WALL MOUNTED BUILDING COMPONENTS, SUCH AS BUT NOT LIMITED TO MILLWORK, BATHROOM ACCESSORIES, HANDRAILS, LADDERS, SHELVING & ELECTRONIC DEVICES. PROVIDE BACKING OF ADEQUATE SIZE AND NUMBER TO SECURELY ANCHOR EACH COMPONENT IN PLACE. WHERE SIZE AND TYPE OF ATTACHMENTS ARE NOT INDICATED, VERIFY SIZE AND TYPE REQUIRED WITH ARCHITECT FOR LOAD CONDITIONS.

N. THE DRAWINGS INDICATE LOCATION, DIMENSIONS, REFERENCE, AND TYPICAL DETAILS OF CONSTRUCTION. THE DRAWINGS DO NOT INDICATE EVERY CONDITION. WORK THAT IS NOT SPECIFICALLY DETAILED SHALL BE OF CONSTRUCTION SIMILAR TO PARTS THAT ARE DETAILED.

O. SUBCONTRACTORS FOR EACH TRADE ARE ADVISED THAT INFORMATION PERTINENT TO THEIR WORK MAY OCCUR IN OTHER PORTIONS OF THE CONTRACT DOCUMENTS. ALL NOTES ARE TO BE REVIEWED AND APPLIED TO RELATED BUILDING DOCUMENTS.

P. WHERE NO MATERIAL NOTES OCCUR, THE GRAPHIC MATERIAL INDICATION SHALL INDICATE MATERIAL TYPES AND ITEMS. SEE SYMBOL AND MATERIALS LIST ON THIS SHEET.

Q. NOT USED.

R. ALL NEW CONSTRUCTION TO COMPLY WITH THE AMERICANS WITH DISABILITIES ACT ACCESSIBILITY GUIDELINES.

S. UNLESS OTHERWISE INDICATED ALL DRAWINGS, NOTES WHICH DO NOT READ "N.I.C.", "EXISTING", OR "EXISTING TO REMAIN", OR "BY OTHERS" SHALL INDICATE NEW WORK WHICH SHALL BE CONTRACTOR FURNISHED AND CONTRACTOR INSTALLED.

T. THE CONTRACTOR(S) SHALL KEEP ALL AREAS OF CONSTRUCTION CLEAN AND FREE OF DEBRIS. AFTER CONSTRUCTION IS COMPLETE, THE GENERAL CONTRACTOR SHALL PROVIDE FINAL CLEAN UP. ENFORCE REQUIREMENTS STRICTLY. DISPOSE OF MATERIALS LAWFULLY.

U. THE CONTRACTOR SHALL VERIFY ALL EXISTING CONDITIONS AND DIMENSIONS FOR ACCURACY PRIOR TO COMMENCING WITH THE WORK. ANY DISCREPANCY SHALL BE BROUGHT TO THE ATTENTION OF THE ARCHITECT.

V. FIELD MEASUREMENTS: TAKE FIELD MEASUREMENTS AS REQUIRED TO FIT THE WORK PROPERLY. RECHECK MEASUREMENTS BEFORE INSTALLING EACH PRODUCT. WHERE PORTIONS OF THE WORK ARE INDICATED TO FIT TO OTHER CONSTRUCTION, VERIFY DIMENSIONS OF OTHER CONSTRUCTION BY FIELD MEASUREMENTS BEFORE FABRICATION. COORDINATE FABRICATION SCHEDULE WITH CONSTRUCTION PROGRESS TO AVOID DELAYING THE WORK.

W. THIS PROJECT MAY NOT BE OCCUPIED UNTIL IT RECEIVES A CERTIFICATE OF OCCUPANCY AND FIRE DEPARTMENT APPROVAL FROM GOVERNING JURISDICTION.

X. COORDINATE STRUCTURAL, MECHANICAL, ELECTRICAL, AND FIRE PROTECTION REQUIREMENTS, ROUTING, AND FIELD VERIFY.

Y. WHERE NEW CONSTRUCTION JOINS WITH EXISTING CONSTRUCTION, ALIGN FINISHED SURFACE OF NEW CONSTRUCTION WITH EXISTING CONSTRUCTION.

Z. WHEN REQUIRED PROVIDE COPY OF FIRE-RESISTANCE RATING ASSEMBLIES TO THE STRUCTURAL INSPECTOR FOR VERIFICATION OF TESTING/LISTING COMPLIANCE AND TO INSPECT ASSEMBLY CONSTRUCTION THEREWITH.

AA. ALL CONSTRUCTION ADDENDA, CHANGE ORDERS, OR DESIGN CLARIFICATIONS TO THOSE ITEMS REGULATED BY THE CODES MUST BE SUBMITTED TO THE FIELD INSPECTOR FOR REVIEW AND APPROVAL PRIOR TO COMMENCING WITH ANY OF THE PROPOSED WORK RELATED TO THE PROPOSED FIELD CHANGE.

BB. EXAMINATION AND ACCEPTANCE OF CONDITIONS: BEFORE PROCEEDING WITH EACH COMPONENT OF THE WORK, EXAMINE SUBSTRATES, AREAS, AND CONDITIONS WITH INSTALLER OR APPLICATOR PRESENT WHERE INDICATED, FOR COMPLIANCE WITH REQUIREMENTS FOR INSTALLATION TOLERANCES AND OTHER CONDITIONS AFFECTING PERFORMANCE. RECORD OBSERVATIONS.

CC. EXAMINE ROUGHING-IN FOR MECHANICAL AND ELECTRICAL SYSTEMS TO VERIFY ACTUAL LOCATIONS OF CONNECTIONS BEFORE EQUIPMENT AND FIXTURE INSTALLATION. EXAMINE WALLS, FLOORS, AND ROOFS FOR SUITABLE CONDITIONS WHERE PRODUCTS AND SYSTEMS ARE TO BE INSTALLED. VERIFY COMPATIBILITY WITH AND SUITABILITY OF SUBSTRATES, INCLUDING COMPATIBILITY WITH EXISTING FINISHES OR PRIMERS.

DD. PROCEED WITH INSTALLATION ONLY AFTER UNSATISFACTORY CONDITIONS HAVE BEEN CORRECTED. PROCEEDING WITH THE WORK INDICATES ACCEPTANCE OF SURFACES AND CONDITIONS.

EE. MAKE JOINTS OF UNIFORM WIDTH. WHERE JOINT LOCATIONS IN EXPOSED WORK ARE NOT INDICATED, ARRANGE JOINTS FOR THE BEST VISUAL EFFECT. FIT EXPOSED CONNECTIONS TOGETHER TO FORM HAIRLINE JOINTS.

FF. GRAPHIC PATTERNS OR HATCHES SHOWN IN DRAWINGS REPRESENT CONSTRUCTION MATERIALS AND ARE NOT TO BE USED AS LITERAL CONSTRUCTION GUIDELINES. CONTRACTOR IS TO COORDINATE ALL MATERIAL LAYOUT PRIOR TO CONSTRUCTION AND PROVIDE WORK BASED ON MANUFACTURES RECOMMENDATIONS AND STANDARD CONSTRUCTION TECHNIQUES. IF QUESTIONS ARISE CONTACT ARCHITECT FOR INTERPRETATION PRIOR TO CONSTRUCTION.

VICINITY MAP:

NORTH

PROJECT INFORMATION

ADDRESS: 8485 W USTICK RD

PROPERTY DESCRIPTION: PAR #3794 OF N'LY POR LOT 16 SUBURBAN HOME SUB POR PARCEL A R/S 9355 #3793-S

PARCEL NUMBER: R8207003794

LOT SIZE: .453 ACRES

NUMBER OF STORIES: 2

SQUARE FOOTAGE: SEE G003 & G004 FOR BUILDING SQUARE FOOTAGE

CONSTRUCTION TYPE: VB

OCCUPANCY: GROUP B-BUSINESS, A3-ASSEMBLY, S1 & S2-STORAGE, R2-RESIDENTIAL

LAND USE CODE: R-1C

FIRE SPRINKLERS: FULL SPRINKLERS

SHEET INDEX

xx	Sheet Name
G000	COVER SHEET
G001	SHEET LEGEND & PROJECT INFORMATION
G002	ACCESSIBLE CLEARANCES AND REQUIREMENTS
G003	1ST FLOOR CODE ANALYSIS & LIFE SAFTEY PLAN
G004	2ND FLOOR CODE ANALYSIS & LIFE SAFETY PLAN
C1.10	SITE SURVEY
C1.20	DEMOLITION PLAN
C1.30	LAYOUT AND MATERIALS PLAN
C1.35	LAYOUT AND MATERIALS DETAILS
C1.36	LAYOUT AND MATERIALS DETAILS
C1.40	UTILITIES PLAN
C1.45	UTILITIES DETAILS
C1.50	GRADING AND DRAINAGE PLAN
C1.55	GRADING AND DRAINAGE DETAILS
ESC1.60	EROSION AND SEDIMENT CONTROL PLAN
ESC1.65	EROSION AND SEDIMENT CONTROL PLAN
L1.70	LANDSCAPE PLAN
L1.75	LANDSCAPE DETAILS
L1.80	IRRIGATION PLAN
L1.85	IRRIGATION DETAILS
L1.86	IRRIGATION DETAILS
A101	SITE PLAN
A102	SITE PLAN DETAILS
A200	1ST FLOOR PLAN
A201	2ND FLOOR PLAN
A202	1ST FLOOR DIMENSION PLAN
A203	2ND FLOOR DIMENSION PLAN
A204	ENLARGED PLANS
A205	ENLARGED STAIR PLANS AND DETAILS
A300	EXTERIOR ELEVATIONS
A301	EXTERIOR ELEVATIONS
A400	BUILDING SECTIONS
A401	BUILDING SECTIONS
A402	WALL SECTIONS
A403	WALL SECTIONS
A404	DETAILS
A405	DETAILS
A500	ROOF PLAN
A501	DETAILS
A600	WALL TYPES
A601	WALL TYPES DETAILS
A700	DOOR SCHEDULE, TYPES & DETAILS
A701	WINDOW TYPES & DETAILS
A702	DETAILS
A800	1ST FLOOR REFLECTED CEILING PLAN
A801	2ND FLOOR REFLECTED CEILING PLAN
A900	INTERIOR ELEVATIONS AND DETAILS
A901	INTERIOR ELEVATIONS AND DETAILS
A902	INTERIOR ELEVATIONS AND DETAILS
A903	INTERIOR ELEVATIONS AND DETAILS
A904	CASEWORK DETAILS
A905	CASEWORK DETAILS
ID100	1ST FLOOR FINISH PLAN
ID101	2ND FLOOR FINISH PLAN
S000	ABBREVIATIONS, SYMBOLS AND SHEET INDEX
S001	GENERAL STRUCTURAL NOTES
S002	GENERAL STRUCTURAL NOTES
S003	GENERAL STRUCTURAL NOTES
S201	FOUNDATION PLAN
S202	LEVEL 2 FRAMING PLAN
S203	ROOF FRAMING PLAN
S300	EXTERIOR ELEVATIONS
S301	EXTERIOR ELEVATIONS
S350	WALL/FRAME ELEVATIONS

SHEET INDEX

xx	Sheet Name
S400	BUILDING SECTIONS
S401	BUILDING SECTIONS
S450	WALL SECTIONS
S451	WALL SECTIONS
S452	WALL SECTIONS
S501	TYPICAL CONCRETE DETAILS
S502	TYPICAL CONCRETE DETAILS
S503	TYPICAL CONCRETE DETAILS
S601	TYPICAL MASONRY DETAILS
S602	TYPICAL MASONRY DETAILS
S650	MASONRY DETAILS
S701	TYPICAL STEEL DETAILS
S702	TYPICAL STEEL DETAILS
S703	TYPICAL STEEL DETAILS
S704	TYPICAL STEEL DETAILS
S705	TYPICAL STEEL DECK DETAILS
S706	TYPICAL STEEL DECK DETAILS
S707	TYPICAL STEEL DECK DETAILS
S750	STEEL DETAILS
S800	STAIR PLANS AND SECTIONS
S810	STAIR DETAILS
S900	EXTERIOR WALL TYPICAL DETAILS
S901	EXTERIOR WALL TYPICAL DETAILS
S902	EXTERIOR WALL TYPICAL DETAILS
S903	EXTERIOR WALL TYPICAL DETAILS
S904	EXTERIOR WALL TYPICAL DETAILS
S905	TYPICAL EXTERIOR WALL DETAILS
M000	MECHANICAL COVER SHEET
M001	MECHANICAL COMCHECK
M002	MECHANICAL ZONING PLANS
M101	1ST FLOOR HVAC PLAN
M102	2ND FLOOR HVAC PLAN
M103	HVAC ROOF PLAN
M201	HVAC VRF PIPING & WIRING DIAGRAMS
M301	HVAC DETAILS
M302	HVAC DETAILS
M401	HVAC SCHEDULES
M402	HVAC SCHEDULES
M403	HVAC SCHEDULES
P101	FOUNDATION PLUMBING PLAN
P201	1ST FLOOR PLUMBING PLAN
P202	2ND FLOOR PLUMBING PLAN
P203	PLUMBING ROOF PLAN
P301	PLUMBING DETAILS
P302	PLUMBING DETAILS
P401	PLUMBING SCHEDULES
E000	ELECTRICAL COVER SHEET
E001	LIGHTING COMPLIANCE REPORT
E101	ELECTRICAL SITE PLAN
E201	1ST FLOOR FIRE ALARM PLAN
E202	2ND FLOOR FIRE ALARM PLAN
E203	1ST FLOOR LIGHTING PLAN
E204	2ND FLOOR LIGHTING PLAN
E205	1ST FLOOR MECHANICAL POWER PLAN
E206	2ND FLOOR MECHANICAL POWER PLAN
E207	1ST FLOOR POWER PLAN
E208	2ND FLOOR POWER PLAN
E209	1ST FLOOR SPECIAL SYSTEMS PLAN
E210	2ND FLOOR SPECIAL SYSTEMS PLAN
E300	ELECTRICAL ROOF PLAN
E400	ONE-LINE DIAGRAM/ELECTRICAL SCHEDULES
E401	ELECTRICAL SCHEDULES
E402	ELECTRICAL SCHEDULES
E500	ELECTRICAL DETAILS
E501	ELECTRICAL DETAILS
E502	ELECTRICAL DETAILS

MATERIAL LEGEND:

- CONCRETE (SECTION)
- GRANULAR FILL
- CONCRETE MASONRY UNITS
- BRICK
- RIGID INSULATION (SECTION)
- ACOUSTIC/THERMAL INSULATION (SECTION)
- STUD WALL (PLAN & SECTION)
- EXISTING WALL TO REMAIN (PLAN & SECTION)
- DEMO WALL (PLAN & SECTION)
- STEEL (SECTION)
- ALUMINUM (SECTION)
- WOOD - FINISH (SECTION)
- DIMENSIONAL LUMBER CONTINUOUS (SECTION)
- DIMENSIONAL LUMBER BLOCKING (SECTION)
- LUMBER - FINISH (SECTION)
- EARTHWORK (SECTION)

ARCHITECT:

COLE ARCHITECTS

COLE ARCHITECTS | 802 W. BANNOCK SUIT 208
Boise, ID 83702 | (208) 345-1800

TCA architecture • planning

TCA | 6211 Roosevelt Way NE
Seattle, WA 98115 | (206) 522-3820

STAMP:

NOT FOR CONSTRUCTION

CONSULTANT:

PROJECT INFORMATION:

City of Boise Fire Station 4

8485 W Ustick Rd, Boise, ID 83704

REVISIONS:

MARK	DATE	DESCRIPTION

PROJECT PHASE	75% CD'S
PROJECT NUMBER	15-27
PROJECT MANAGER	J. Chatfield
PROJECT ARCHITECT	J. Chatfield
DESIGN	J. Chatfield
DRAWN BY	J. Chatfield, C. Clay, R. Stewart

SHEET NAME:

SHEET LEGEND & PROJECT INFORMATION

SHEET NUMBER:

G001

02.02.16

DOORS AND DOORWAYS

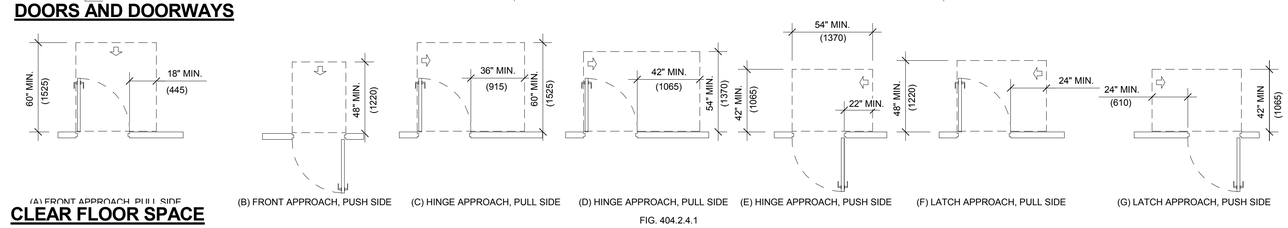

(A) FRONT APPROACH, PULL SIDE (B) FRONT APPROACH, PUSH SIDE (C) HINGE APPROACH, PULL SIDE (D) HINGE APPROACH, PULL SIDE (E) HINGE APPROACH, PUSH SIDE (F) LATCH APPROACH, PULL SIDE (G) LATCH APPROACH, PUSH SIDE

FIG. 404.2.4.1

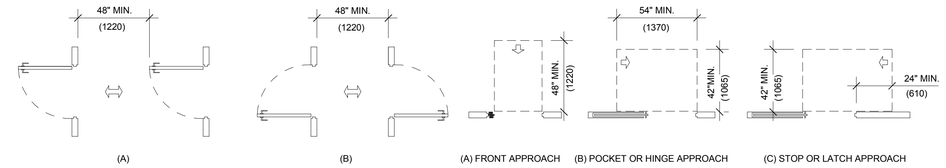

(A) (B)

FIG. 404.2.6
DOORS IN A SERIES

(A) FRONT APPROACH (B) POCKET OR HINGE APPROACH (C) STOP OR LATCH APPROACH

FIG. 404.2.4.2

CLEAR FLOOR SPACE

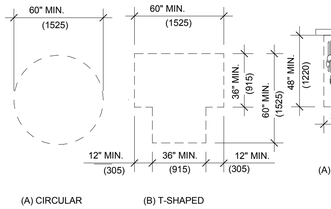

(A) CIRCULAR (B) T-SHAPED

FIG. 304.3
SIZE OF WHEELCHAIR TURNING SPACE

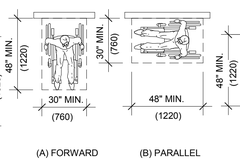

(A) FORWARD (B) PARALLEL

FIG. 405.5
POSITION OF CLEAR FLOOR OR GROUND SPACE

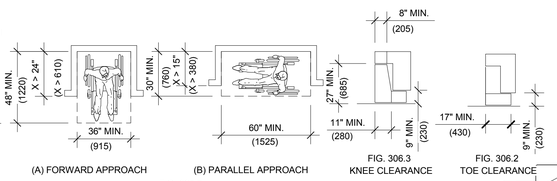

(A) FORWARD APPROACH (B) PARALLEL APPROACH

FIG. 305.7
MANEUVERING CLEARANCE IN AN ALCOVE

FIG. 306.3
KNEE CLEARANCE

FIG. 306.2
TOE CLEARANCE

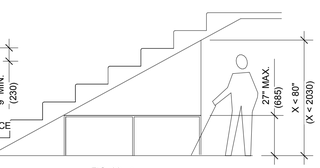

FIG. 307.4
REDUCED VERTICAL CLEARANCE

REACH RANGES

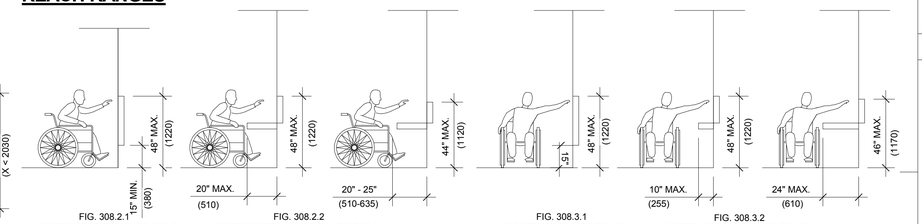

FIG. 308.2.1
UNOBSTRUCTED FORWARD REACH

FIG. 308.2.2
OBSTRUCTED HIGH FORWARD REACH

FIG. 308.3.1
UNOBSTRUCTED SIDE REACH

FIG. 308.3.2
OBSTRUCTED HIGH SIDE REACH

GENERAL SITE AND BUILDING ELEMENTS

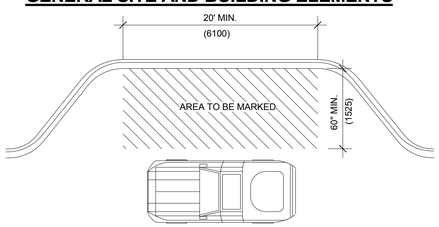

FIG. 503.3
PASSENGER LOADING ZONE ACCESS AISLE

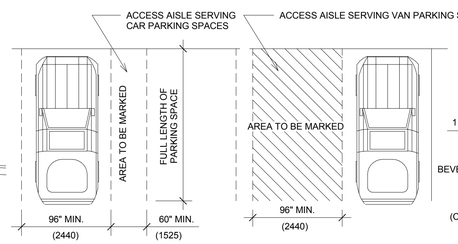

FIG. 502.2/502.3
VEHICLE PARKING SPACE/
PARKING SPACE ACCESS AISLE

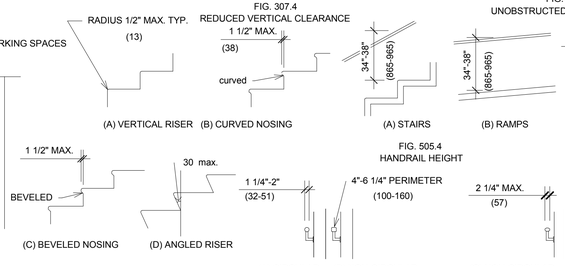

(A) VERTICAL RISER (B) CURVED NOSING

FIG. 504.5
STAIR NOSINGS

(A) STAIRS (B) RAMPS

FIG. 505.4
HANDRAIL HEIGHT

(C) BEVELED NOSING (D) ANGLED RISER

(A) CIRCULAR (B) NON-CIRCULAR (C) NON-CIRCULAR

FIG. 505.7
HANDRAIL CROSS SECTION

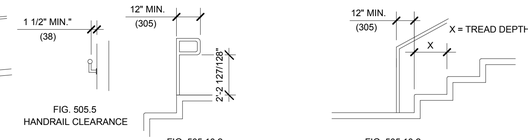

FIG. 505.5
HANDRAIL CLEARANCE

FIG. 505.10.2
TOP HANDRAIL EXTENSIONS AT STAIRS

FIG. 505.10.2
BOTTOM HANDRAIL EXTENSIONS AT STAIRS

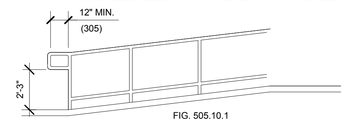

FIG. 505.10.1
TOP AND BOTTOM HANDRAIL EXTENSIONS AT RAMPS

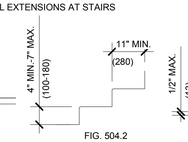

FIG. 504.2
TREADS AND RISERS FOR
ACCESSIBLE STAIRWAYS

BUILDING BLOCKS

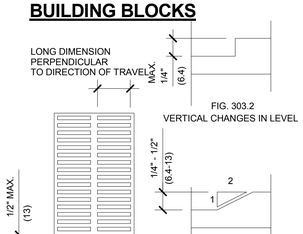

FIG. 303.2
VERTICAL CHANGES IN LEVEL

FIG. 302.3
OPENINGS IN FLOOR
OR GROUND SURFACES

FIG. 303.3
BEVELED CHANGES IN LEVEL

COMMUNICATION ELEMENTS AND FEATURES

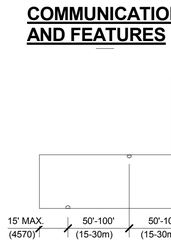

FIG. 702.3.5.1
APPLIANCE SPACING IN CORRIDORS

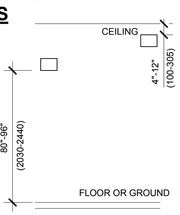

(A) WALL ALARM (B) WALL ALARM WITH SMOKE DETECTOR

FIG. 702.3.3.1
LOCATION OF WALL-MOUNTED APPLIANCES

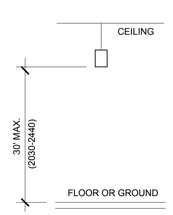

FIG. 702.3.3.2
LOCATION OF CEILING-MOUNTED APPLIANCES

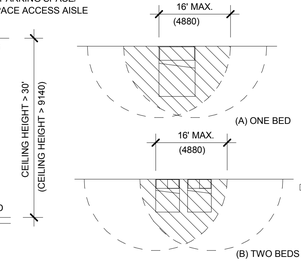

(A) ONE BED (B) TWO BEDS

FIG. 702.3.6.2
APPLIANCE LOCATION IN SLEEPING ROOMS

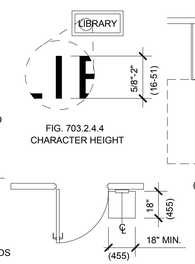

FIG. 703.2.4.4
CHARACTER HEIGHT

FIG. 703.2.8
MOUNTING LOCATION AT DOORS

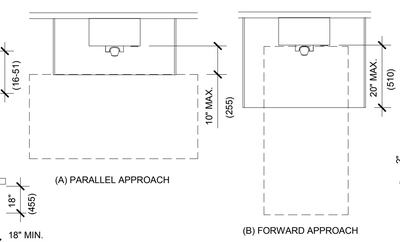

(A) PARALLEL APPROACH (B) FORWARD APPROACH

FIG. 704.2.1
CLEAR FLOOR OR GROUND
SPACE FOR TELEPHONES

FIG. 705.3.1.1
TRUNCATED DOME SIZE

PROTRUDING OBJECTS

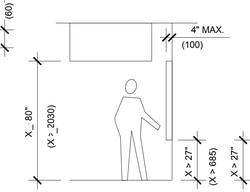

FIG. 307.2
LIMITS OF PROTRUDING OBJECTS

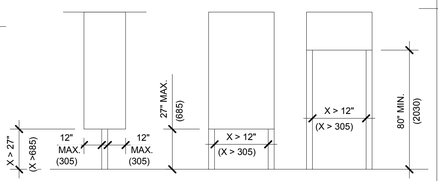

FIG. 307.3
POST-MOUNTED PROTRUDING OBJECTS

PLUMBING ELEMENTS AND FACILITIES

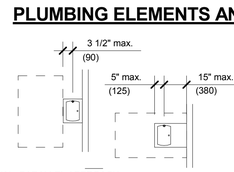

(A) PARALLEL APPROACH (B) FORWARD APPROACH

FIG. 602.5
DRINKING FOUNTAIN SPOUT LOCATION

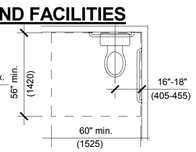

FIG. 604.2/604.3.1
WATER CLOSET LOCATION/
SIZE CLEARANCE

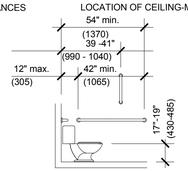

FIG. 604.4/604.5.1
HEIGHT OF WATER CLOSET/
SIDE WALL GRAB BAR FOR WATER CLOSET

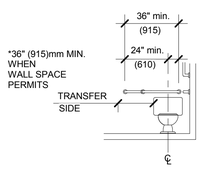

FIG. 604.5.2
REAR WALL GRAB BAR FOR WATER CLOSET

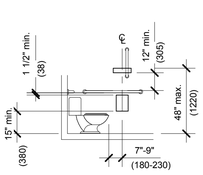

FIG. 604.7
DISPENSER LOCATION

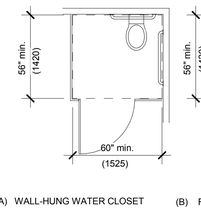

(A) WALL-HUNG WATER CLOSET (B) FLOOR-MOUNTED WATER CLOSET

FIG. 604.8.1.1
WHEELCHAIR ACCESSIBLE TOILET COMPARTMENTS

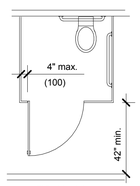

FIG. 604.8.3
TOILET COMPARTMENT DOORS

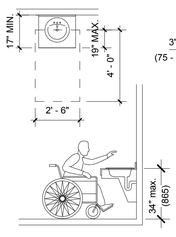

FIG. 606.3
HEIGHT OF LAVATORIES AND SINKS

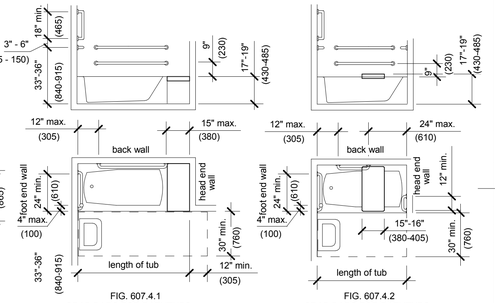

FIG. 607.4.1
GRAB BARS FOR BATHTUBS
WITH PERMANENT SEATS
(WITH FIG. 607.2 CLEARANCES)

FIG. 607.4.2
GRAB BARS FOR BATHTUBS
WITHOUT PERMANENT SEATS
(WITH FIG. 607.2 CLEARANCES)

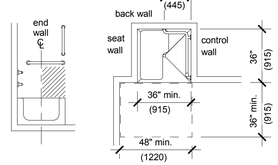

FIG. 607.5
LOCATION OF BATHTUB CONTROLS

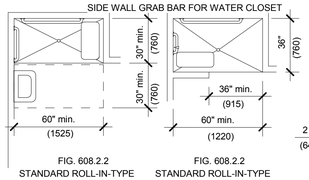

FIG. 608.2.2
STANDARD ROLL-IN-TYPE
SHOWER COMPARTMENT

FIG. 608.2.2
STANDARD ROLL-IN-TYPE
SHOWER COMPARTMENT

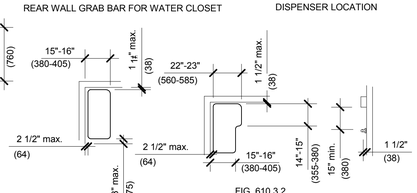

FIG. 608.2.1/608.3.1
TRANSFER-TYPE SHOWER COMPARTMENT
WITH GRAB BARS

FIG. 610.3.1
RECTANGULAR SHOWER
COMPARTMENT SEAT

FIG. 610.3.2
L-SHAPED SHOWER
COMPARTMENT SEAT

FIG. 609.3
SPACING OF GRAB BARS

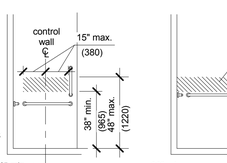

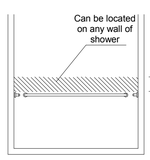

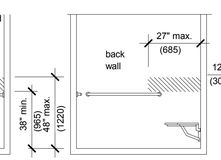

(A) without seat (B) with seat

FIG. 608.5.1
CONTROLS IN TRANSFER-TYPE
SHOWERS

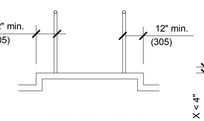

(A) EXTENDED SURFACE

FIG. 405.9
RAMP EDGE PROTECTION

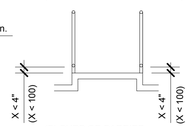

(B) CURB OR BARRIER

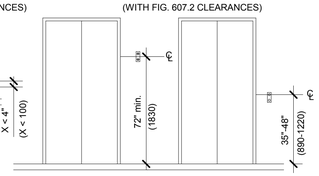

FIG. 407.2.3.2.1
HEIGHT OF ELEVATOR VISIBLE SIGNALS

FIG. 407.2.2
ELEVATOR CALL BUTTONS

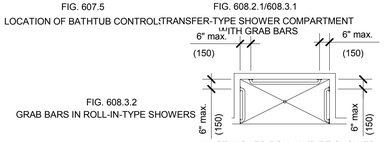

FIG. 608.3.2
GRAB BARS IN ROLL-IN-TYPE SHOWERS

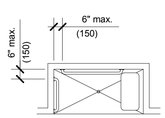

(A) STANDARD ROLL-IN-TYPE SHOWER (B) ROLL-IN-TYPE SHOWER WITH SEAT

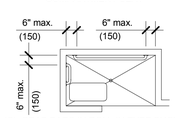

(C) GRAB BARS IN ROLL-IN-TYPE SHOWERS

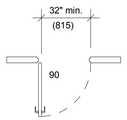

(A) HINGED DOOR

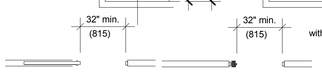

(B) SLIDING DOOR (C) FOLDING DOOR

FIG. 404.2.3
CLEAR WIDTH OF DOORWAYS

ACCESSIBLE ROUTES

ARCHITECT:

COLE ARCHITECTS

COLE ARCHITECTS | 802 W. BANNOCK SUIT 208
Boise, ID 83702 | (208) 345-1800

TCA architecture • planning

TCA | 6211 Roosevelt Way NE
Seattle, WA 98115 | (206) 522-3820

STAMP:

NOT FOR CONSTRUCTION

CONSULTANT:

PROJECT INFORMATION:

City of Boise Fire Station 4

8485 W Ustick Rd, Boise, ID 83704

REVISIONS:

MARK	DATE	DESCRIPTION

PROJECT PHASE	75% CD'S
PROJECT NUMBER	15-27
PROJECT MANAGER	J. Chatfield
PROJECT ARCHITECT	J. Chatfield
DESIGN	J. Chatfield
DRAWN BY	J. Chatfield, C. Clay, R. Stewart

SHEET NAME:

ACCESSIBLE CLEARANCES AND REQUIREMENTS

SHEET NUMBER:

G002

02.02.16

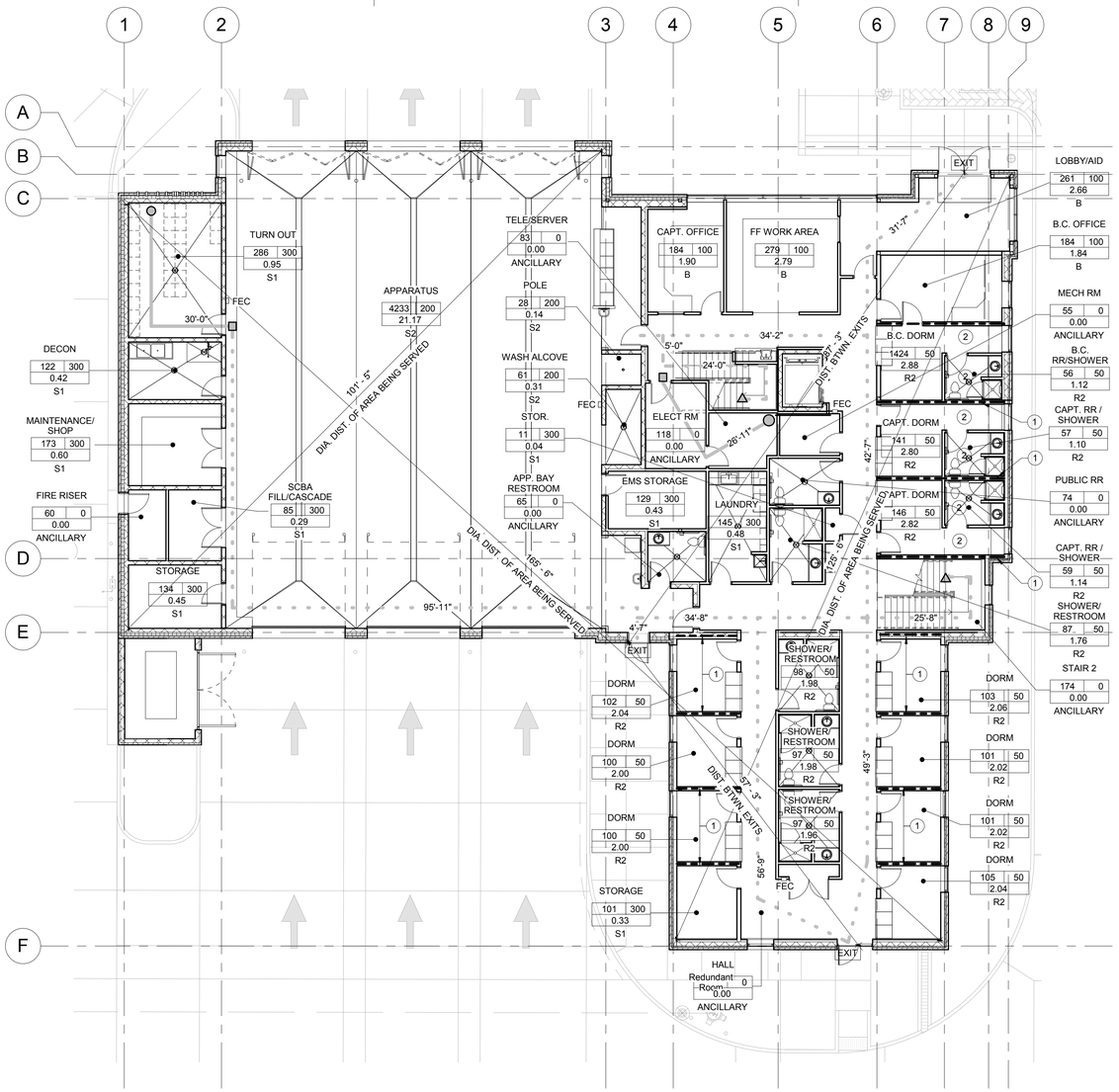

1ST FLOOR CODE PLAN

3/32" = 1'-0"

NORTH

Used Group	Description		Required water closet Male:	Required water closet Female:	Required lavatories Male:	Required lavatories Female:	Required bath or shower Total:	Required drinking fountain Total:	Required drinking fountain Other
B	Building for the transaction of business, professional services, other services involving merchandise, office building, banks, light industrial and similar uses	No. of Occupants	1 per 25 for the first 50 and 1 per 50 for the remainder exceeding 50	1 per 25 for the first 50 and 1 per 50 for the remainder exceeding 50	1 per 40 for the first 80 and 1 per 80 for the remainder exceeding 80	1 per 40 for the first 80 and 1 per 80 for the remainder exceeding 80		1 per 100	
		10	0.20	0.20	0.13	0.13		0.10	1 Service sink
R-2	Dormitories, fraternities, sororities and boarding house (not transient)	No. of Occupants	1 per 10	1 per 10	1 per 10	1 per 10	1 per 8	1 per 100	
		34	1.70	1.70	1.70	1.70	4.25	0.1	1 Service sink
S-1 & S-2	Structure for storage of goods, warehouses, storehouse and freight depots, low and moderate hazard	No. of Occupants	1 per 100	1 per 100	1 per 100	1 per 100		1 per 1000	
		28	0.14	0.14	0.14	0.14		0.01	1 Service sink
	Total =		3	3	2	2	5	1	
	PROVIDED =		5	4	5	4	7	1	

MINIMUM NUMBER OF REQUIRED PLUMBING FACILITIES PER T-2902.1

PLUMBING CODE REVIEW
1ST FLOOR

1" = 1'-0"

LIFE SAFETY LEGEND

- XXX — NAME
- XXX — ROOM AREA
- XXX XXX — OCCUPANCY LOAD FACTOR
- XXX — OCCUPANT LOAD
- XXX — OCCUPANCY TYPE
- EXIT — BUILDING EXIT & OVERHEAD EXIT SIGNAGE PER JURISDICTION REQUIREMENTS
- FEC — FIRE EXTINGUISHER - PROVIDE LARSEN'S MP10 FIRE EXTINGUISHER W/ VERTICAL DUO 2-1/2" SEMI-RECESSED CABINET OR APPROVED EQUAL.
- START — STOP
- EXIT ACCESS PATH
- CONT. OF PATH FROM FLOOR ABOVE OR BELOW
- ### — DISTANCE
- EXIT — END EXIT ACCESS
- COMMON PATH OF EGRESS TRAVEL
- FIRE RATED WALL - SEE KEYNOTE 1 THIS SHEET.

KEY NOTES:

1. 1 HR FIRE RATED WALL CONSTRUCT WALL PER UL465.
2. 1 HR RATED CEILING CONSTRUCT PER xxxxxxXXXXXXxxxxxx

OCCUPANCY SCHEDULE:

ROOM NAME	AREA	OCCUPANCY TYPE	OCCUPANCY LOAD FACTOR	OCCUPANCY LOAD	FLOOR
1ST FLOOR					
SCBA FILL/CASCADE	85 SF	S1	300	0.29	1ST
FIRE RISER	60 SF	ANCILLARY	0	0.00	1ST
MAINTENANCE/ SHOP	173 SF	S1	300	0.60	1ST
DECON	122 SF	S1	300	0.42	1ST
TURN OUT	286 SF	S1	300	0.95	1ST
APPARATUS	4233 SF	S2	200	21.17	1ST
WASH ALCOVE	61 SF	S2	200	0.31	1ST
EMS STORAGE	129 SF	S1	300	0.43	1ST
APP. BAY RESTROOM	65 SF	ANCILLARY	0	0.00	1ST
DORM	102 SF	R2	50	2.04	1ST
DORM	100 SF	R2	50	2.00	1ST
DORM	100 SF	R2	50	2.00	1ST
SHOWER/ RESTROOM	97 SF	R2	50	1.98	1ST
SHOWER/ RESTROOM	97 SF	R2	50	1.96	1ST
SHOWER/ RESTROOM	98 SF	R2	50	1.98	1ST
DORM	105 SF	R2	50	2.04	1ST
DORM	101 SF	R2	50	2.02	1ST
DORM	101 SF	R2	50	2.02	1ST
DORM	103 SF	R2	50	2.06	1ST
STAIR 2	174 SF	ANCILLARY	0	0.00	1ST
SHOWER/ RESTROOM	87 SF	R2	50	1.76	1ST
PUBLIC RR	74 SF	ANCILLARY	0	0.00	1ST
LAUNDRY	145 SF	S1	300	0.48	1ST
TELE/SERVER	83 SF	ANCILLARY	0	0.00	1ST
ELECT RM	118 SF	ANCILLARY	0	0.00	1ST
CAPT. OFFICE	184 SF	B	100	1.90	1ST
FF WORK AREA	279 SF	B	100	2.79	1ST
B.C. OFFICE	184 SF	B	100	1.84	1ST
B.C. DORM	1424 SF	R2	50	2.88	1ST
CAPT. DORM	141 SF	R2	50	2.80	1ST
CAPT. RR / SHOWER	57 SF	R2	50	1.10	1ST
CAPT. RR / SHOWER	59 SF	R2	50	1.14	1ST
LOBBY/AID	261 SF	B	100	2.66	1ST
MECH RM	55 SF	ANCILLARY	0	0.00	1ST
B.C. RR/SHOWER	56 SF	R2	50	1.12	1ST
CAPT. DORM	146 SF	R2	50	2.82	1ST
POLE	28 SF	S2	200	0.14	1ST
STORAGE	101 SF	S1	300	0.33	1ST
STORAGE	134 SF	S1	300	0.45	1ST
COFFEE	10 SF	B	100	0.16	1ST
MAP ROOM	126 SF	S1	100	1.26	1ST
STOR.	11 SF	S1	300	0.04	1ST
	10156 SF			69.94	

GENERAL NOTES CODE PLAN:

A. ALL CONSTRUCTION ADDENDA, CHANGE ORDERS, OR DESIGN CLARIFICATIONS MUST BE SUBMITTED TO THE BUILDING DEPARTMENT OFFICE STAFF FOR REVIEW AND APPROVAL PRIOR TO CONSTRUCTION IN THE FIELD. THE FIELD INSPECTOR WILL NOT APPROVE CHANGES TO THESE APPROVED PLANS AND SPECIFICATIONS.

B. ABBREVIATIONS OR PARTIAL CODE SECTIONS NOTED ON THE PLAN AND PLAN REVIEW LIST ARE INTENDED TO INDICATE THE NATURE OF THE PLAN DEFICIENCY OR GIVE ADDITIONAL INFORMATION. THE FULL TEXT OF THE CODE, AS INDICATED BY THE CODE SECTION REFERENCED, ALWAYS APPLIES.

C. THE ISSUANCE OR GRANTING OF A PERMIT OR APPROVAL OF PLANS, SPECIFICATIONS, AND COMPUTATIONS SHALL NOT BE CONSTRUED TO BE A PERMIT FOR, OR AN APPROVAL OF, ANY VIOLATION OF ANY OF THE PROVISIONS OF THE IBC OR ANY OTHER RADIANCE OF THIS JURISDICTION. PERMITS PRESUMING TO GIVE AUTHORITY TO VIOLATE OR CANCEL THE PROVISIONS OF THE IBC OR OTHER ORDINANCES OF THIS JURISDICTION SHALL NOT BE VALID.

D. APPROVAL AS A RESULT OF AN INSPECTION SHALL NOT BE CONSTRUED TO BE AN APPROVAL OF VIOLATIONS OF THE PROVISIONS OF THE IBC OR OF OTHER ORDINANCES OF THIS JURISDICTION. INSPECTIONS PRESUMING TO GIVE AUTHORITY TO VIOLATE OR CANCEL THE PROVISIONS OF THE IBC OR OF OTHER ORDINANCES OF THIS JURISDICTION SHALL NOT BE VALID.

E. THE RELOCATION OF FIRE SPRINKLER HEADS SHALL COMPLY WITH APPROVED FIRE SUPPRESSION SYSTEMS PLAN REVIEW DOCUMENTS.

F. ALTERATIONS OR REPAIRS TO ANY BUILDING OR STRUCTURE SHALL CONFORM WITH THE REQUIREMENTS OF THE PLAN REVIEW COMMENTS. ADDITIONS OR ALTERATIONS SHALL NOT BE MADE TO AN EXISTING STRUCTURE WHICH WILL CAUSE THE EXISTING BUILDING OR STRUCTURE TO BE IN VIOLATION OF ANY PROVISIONS APPLICABLE IN THE IBC.

G. NEW FIRE SPRINKLER SYSTEM OR MODIFIED EXISTING FIRE SPRINKLER SYSTEM ARE TO BE IN COMPLIANCE WITH ADOPTED VERSIONS OF NFPA 13 AND INTERNATIONAL BUILDING CODE. THE STATE FIRE MARSHAL AND LOCAL FIRE DEPARTMENT. WORK ON FIRE SPRINKLER SYSTEMS ARE TO BE CONDUCTED BY A LICENSED FIRE SPRINKLER CONTRACTOR. NEW SYSTEMS AND MODIFICATIONS TO EXISTING SYSTEMS REQUIRE SUBMISSION OF PLANS TO THE STATE FIRE MARSHAL'S OFFICE FOR REVIEW AND ACCEPTANCE PRIOR TO THE INSTALLATION OF ANY SYSTEM COMPONENTS.

CODE REVIEW:

ADDRESS:
8485 W USTICK ROAD
BOISE, ID 83704

APPLICABLE CODES:
2012 INTERNATIONAL BUILDING CODE
2012 INTERNATIONAL RESIDENTIAL CODE (PARTS I - IV AND IX, APPENDIX G)
2012 INTERNATIONAL ENERGY CONSERVATION CODE
IDAHO STATE PLUMBING CODE
2014 NATIONAL ELECTRIC CODE
2012 INTERNATIONAL FIRE CODE
2012 INTERNATIONAL MECHANICAL CODE
2012 INTERNATIONAL FUEL GAS CODE CODE

FIRE SPRINKLER AND FIRE ALARM:
FIRE SPRINKLER SYSTEM - YES
FIRE ALARM SYSTEM - YES

THE FIRE SPRINKLER SYSTEM TO BE IN COMPLIANCE WITH NFPA 13 AND APPROVED BY THE STATE FIRE MARSHAL AND THE LOCAL FIRE DEPARTMENT. NEW WALL LOCATIONS MAY REQUIRE AN ALTERATION TO THE SPRINKLER SYSTEM TO MAINTAIN COMPLIANCE. WORK TO BE PREFORMED BY LICENSED FIRE SPRINKLER CONTRACTOR.

FULLY SPRINKLERED BUILDING PER SECTION 903.2.6
FIRE ALARM PER SECTION 907

503 (TABLE) GENERAL BUILDING HEIGHT AND AREA LIMITATIONS:
CONSTRUCTION TYPE: **VB**
GROUP: **B - BUSINESS**
- ALLOWABLE AREA (PER STORY) = **9,000 SF**
- ALLOWABLE HEIGHT = **2 STORY**
SECTION 506 - BUILDING AREA MODIFICATIONS:
- 506.3 AUTOMATIC SPRINKLER SYSTEM INCREASE 200%:

ALLOWABLE FLOOR AREA = **18,000 SF PER STORY**
ALLOWABLE HEIGHT = **3 STORIES**

- ACTUAL 1ST STORY BUILDING AREA: **10,141 SF**
- ACTUAL 2ND STORY BUILDING AREA: **3,619 SF**
- TOTAL BUILDING AREA: **13,760 SF**

1004 OCCUPANT LOAD (SEE SCHEDULE THIS SHEET & G004):
- 1ST STORY: **70 OCCUPANTS**
- 2ND STORY: **63 OCCUPANTS**
- TOTAL: **133 OCCUPANTS**

MEANS OF EGRESS

11014.3 COMMON PATH OF EGRESS TRAVEL (SEE PLANS):
IN OCCUPANCIES OTHER THAN GROUPS, H-1, H-2, H-3, B, S, F, R-2, R-3, AND I-3, THE COMMON PATH OF EGRESS TRAVEL SHALL NOT EXCEED 75 FEET.
- MAXIMUM TRAVEL DISTANCE = 30'-0" (SEE PLANS)

1015.2.1 EXIT ACCESS (SEE PLANS):
THE EXIT DOORS SHALL BE PLACED A DISTANCE APART EQUAL TO NOT LESS THAN 1/2 OF THE LENGTH OF THE MAXIMUM OVERALL DIAGONAL DIMENSION OF THE BUILDING OR AREA TO BE SERVED MEASURED IN A STRAIGHT LINE BETWEEN EXIT DOORS OR EXIT ACCESS DOORWAYS.
- EXCEPTION 2: WHERE A BUILDING IS EQUIPPED WITH AN AUTOMATIC SPRINKLER SYSTEM THE EXIT DOOR SHALL NOT BE LESS THAN 1/3 THE DIAGONAL DISTANCE.
- DIAGONAL DISTANCE = 165'-4" / 3 = 55'-1" MINIMUM | ACTUAL = 57'-1"

1016.2 EXIT ACCESS TRAVEL DISTANCE (SEE PLANS):
TYPE B OCCUPANCY WITH FIRE SPRINKLER = 300' PERMITTED
FIRST FLOOR TRAVEL DISTANCE (WORST CASE) = 94'-9"
SECOND FLOOR TRAVEL DISTANCE (WORST CASE) = 158'-0"

1015.1.1 EXITS OR EXIT ACCESS DOORWAYS FROM SPACES (SEE PLANS):
(2) EXITS SHALL BE PROVIDED IN B OCCUPANCY UNDER 500 OCCUPANTS
- (2) REQUIRED - (3) PROVIDED

1018.1 (TABLE) CORRIDOR FIRE-RESISTANCE RATING:
RATED CORRIDOR REQUIRED IN A, B, E, F, M, S, AND U, ARE NOT REQUIRED TO BE RATED IN BUILDINGS EQUIPPED WITH AN AUTOMATIC SPRINKLER SYSTEM.
-RATED CORRIDOR NOT REQUIRED.

906.1 PORTABLE FIRE EXTINGUISHERS (SEE PLANS):
PROVIDE FIRE EXTINGUISHER(S) PER IBC REQUIREMENTS, TYPE A-1, MAX SPACING 75 LINEAL FEET (SEE PLANS).

PLUMBING FIXTURE REQUIREMENTS:
SEE "PLUMBING FIXTURE REQUIREMENTS" (THIS SHEET) FOR DETAILED BREAKDOWN OF REQUIRED FIXTURES AND PROVIDED FIXTURES.

ARCHITECT:

COLE ARCHITECTS
COLE ARCHITECTS | 802 W. BANNOCK SUIT 208
Boise, ID 83702 | (208) 345-1800

TCA architecture • planning
TCA | 6211 Roosevelt Way NE
Seattle, WA 98115 | (206) 522-3820

STAMP:

NOT FOR CONSTRUCTION

CONSULTANT:

PROJECT INFORMATION:

City of Boise Fire Station 4
8485 W Ustick Rd, Boise, ID 83704

REVISIONS:

MARK	DATE	DESCRIPTION

PROJECT PHASE	75% CD'S
PROJECT NUMBER	15-27
PROJECT MANAGER	J. Chatfield
PROJECT ARCHITECT	J. Chatfield
DESIGN	J. Chatfield
DRAWN BY	J. Chatfield, C. Clay, R. Stewart

SHEET NAME:

1ST FLOOR CODE ANALYSIS & LIFE SAFTEY PLAN

SHEET NUMBER:

G003

02.02.16

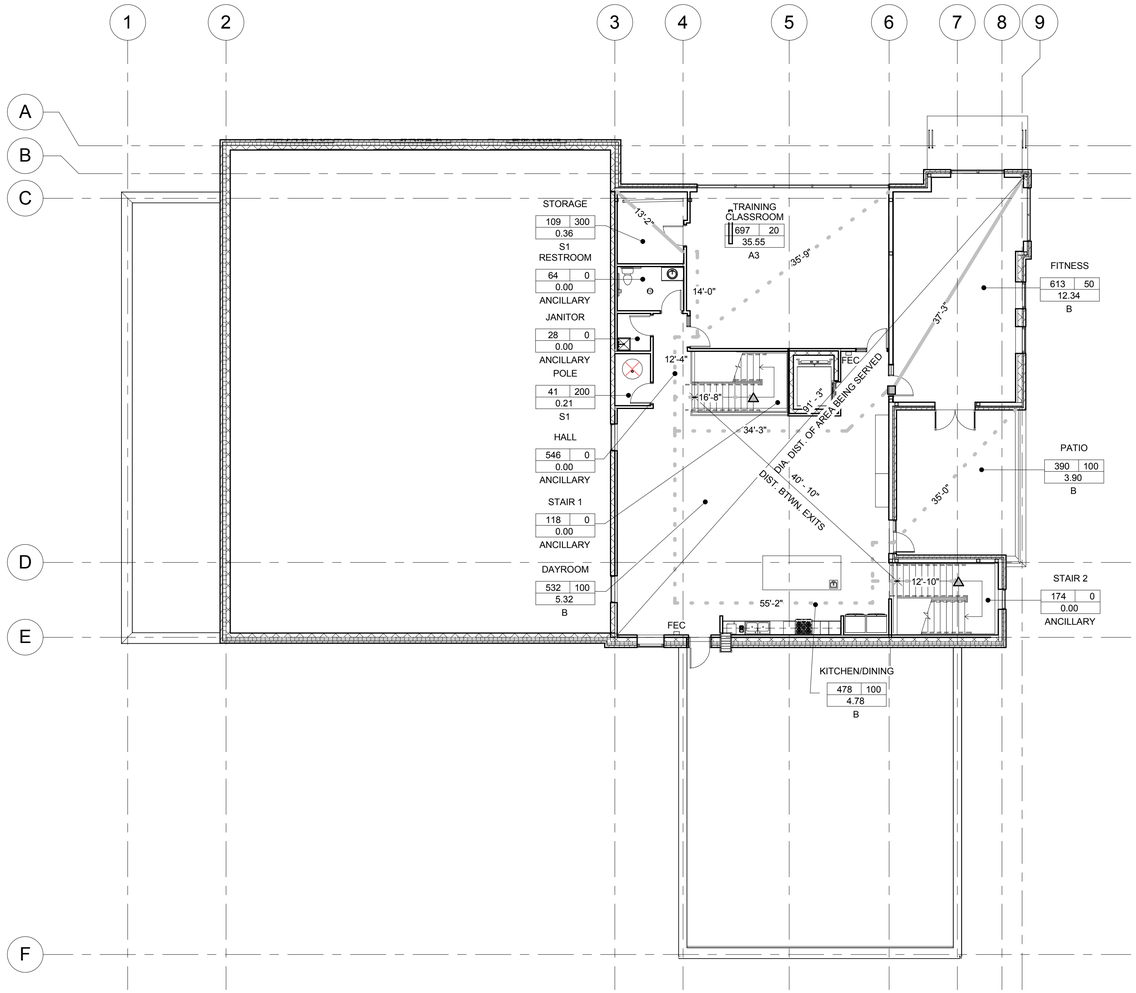

2ND FLOOR CODE PLAN

3/32" = 1'-0"

Used Group	Description		Required water closet Male:	Required water closet Female:	Required lavatories Male:	Required lavatories Female:	Required bath or shower Total:	Required drinking fountain Total:	Required drinking fountain Other
A-3	Auditoriums without permanent seating, art galleries, exhibition halls, museums, lecture halls, Librans, arcades and gymnasiums	No. of Occupants	1 per 125	1 per 65	1 per 200	1 per 200		1 per 500	
		36	0.14	0.28	0.09	0.09		0.07	1 Service sink
B	Building for the transaction of business, professional services, other services involving merchandise, office building, banks, light industrial and similar uses	No. of Occupants	1 per 25 for the first 50 and 1 per 50 for the remainder exceeding 50	1 per 25 for the first 50 and 1 per 50 for the remainder exceeding 50	1 per 40 for the first 80 and 1 per 80 for the remainder exceeding 80	1 per 40 for the first 80 and 1 per 80 for the remainder exceeding 80		1 per 100	
		27	0.54	0.54	0.34	0.34		0.36	1 Service sink
S-1 & S-2	Structure for storage of goods, warehouses, storehouse and freight depots, low and moderate hazard	No. of Occupants	1 per 100	1 per 100	1 per 100	1 per 100		1 per 1000	
		1	0.01	0.01	0.01	0.01		0.036	1 Service sink
Total =			1	1	1	1		1	
PROVIDED =			1	0	1	0		1	

USE FLOOR BELOW

MINIMUM NUMBER OF REQUIRED PLUMBING FACILITIES PER T-2902.1

PLUMBING CODE REVIEW
2ND FLOOR

1" = 1'-0"

CODE REVIEW:

ADDRESS:
8485 W USTICK ROAD
BOISE, ID 83704

APPLICABLE CODES:
2012 INTERNATIONAL BUILDING CODE
2012 INTERNATIONAL RESIDENTIAL CODE (PARTS I - IV AND IX, APPENDIX G)
2012 INTERNATIONAL ENERGY CONSERVATION CODE
IDAHO STATE PLUMBING CODE
2014 NATIONAL ELECTRIC CODE
2012 INTERNATIONAL FIRE CODE
2012 INTERNATIONAL MECHANICAL CODE
2012 INTERNATIONAL FUEL GAS CODE CODE

FIRE SPRINKLER AND FIRE ALARM:
FIRE SPRINKLER SYSTEM - YES
FIRE ALARM SYSTEM - YES

THE FIRE SPRINKLER SYSTEM TO BE IN COMPLIANCE WITH NFPA 13 AND APPROVED BY THE STATE FIRE MARSHAL AND THE LOCAL FIRE DEPARTMENT. NEW WALL LOCATIONS MAY REQUIRE AN ALTERATION TO THE SPRINKLER SYSTEM TO MAINTAIN COMPLIANCE. WORK TO BE PREFORMED BY LICENSED FIRE SPRINKLER CONTRACTOR.

FULLY SPRINKLERED BUILDING PER SECTION 903.2.6
FIRE ALARM PER SECTION 907

503 (TABLE) GENERAL BUILDING HEIGHT AND AREA LIMITATIONS:
CONSTRUCTION TYPE: **VB**
GROUP: **B - BUSINESS**
- ALLOWABLE AREA (PER STORY) = **9,000 SF**
- ALLOWABLE HEIGHT = **2 STORY**
SECTION 506 - BUILDING AREA MODIFICATIONS:
- 506.3 AUTOMATIC SPRINKLER SYSTEM INCREASE 200%:

ALLOWABLE FLOOR AREA = **18,000 SF PER STORY**
ALLOWABLE HEIGHT = **3 STORIES**

- ACTUAL 1ST STORY BUILDING AREA: **10,141 SF**
- ACTUAL 2ND STORY BUILDING AREA: **3,619 SF**
- TOTAL BUILDING AREA: **13,760 SF**

1004 OCCUPANT LOAD (SEE SCHEDULE THIS SHEET & G003):
- 1ST STORY: **70 OCCUPANTS**
- 2ND STORY: **63 OCCUPANTS**
- TOTAL: **133 OCCUPANTS**

MEANS OF EGRESS

11014.3 COMMON PATH OF EGRESS TRAVEL (SEE PLANS):
IN OCCUPANCIES OTHER THAN GROUPS, H-1, H-2, H-3, B, S, F, R-2, R-3, AND I-3, THE COMMON PATH OF EGRESS TRAVEL SHALL NOT EXCEED 75 FEET.
- MAXIMUM TRAVEL DISTANCE = 37'-3" (SEE PLANS)

1015.2.1 EXIT ACCESS (SEE PLANS):
THE EXIT DOORS SHALL BE PLACED A DISTANCE APART EQUAL TO NOT LESS THAN 1/2 OF THE LENGTH OF THE MAXIMUM OVERALL DIAGONAL DIMENSION OF THE BUILDING OR AREA TO BE SERVED MEASURED IN A STRAIGHT LINE BETWEEN EXIT DOORS OR EXIT ACCESS DOORWAYS.
- EXCEPTION 2: WHERE A BUILDING IS EQUIPPED WITH AN AUTOMATIC SPRINKLER SYSTEM THE EXIT DOOR SHALL NOT BE LESS THAN 1/3 THE DIAGONAL DISTANCE.
- DIAGONAL DISTANCE = 91'-3" / 3 = 30'-5" MINIMUM | ACTUAL = 40'-10"

1016.2 EXIT ACCESS TRAVEL DISTANCE (SEE PLANS):
TYPE B OCCUPANCY WITH FIRE SPRINKLER = 300' PERMITTED
FIRST FLOOR TRAVEL DISTANCE (WORST CASE) = 94'-9"
SECOND FLOOR TRAVEL DISTANCE (WORST CASE) = 158'-0"

1015.1.1 EXITS OR EXIT ACCESS DOORWAYS FROM SPACES (SEE PLANS):
(2) EXITS SHALL BE PROVIDED IN B OCCUPANCY UNDER 500 OCCUPANTS
- (2) REQUIRED - (3) PROVIDED

1018.1 (TABLE) CORRIDOR FIRE-RESISTANCE RATING:
RATED CORRIDOR REQUIRED IN A, B, E, F, M, S, AND U, ARE NOT REQUIRED TO BE RATED IN BUILDINGS EQUIPPED WITH AN AUTOMATIC SPRINKLER SYSTEM.
-RATED CORRIDOR NOT REQUIRED.

906.1 PORTABLE FIRE EXTINGUISHERS (SEE PLANS):
PROVIDE FIRE EXTINGUISHER(S) PER IBC REQUIREMENTS, TYPE A-1, MAX SPACING 75 LINEAL FEET (SEE PLANS).

PLUMBING FIXTURE REQUIREMENTS:
SEE "PLUMBING FIXTURE REQUIREMENTS" (THIS SHEET) FOR DETAILED BREAKDOWN OF REQUIRED FIXTURES AND PROVIDED FIXTURES.

GENERAL NOTES CODE PLAN:

A. ALL CONSTRUCTION ADDENDA, CHANGE ORDERS, OR DESIGN CLARIFICATIONS MUST BE SUBMITTED TO THE BUILDING DEPARTMENT OFFICE STAFF FOR REVIEW AND APPROVAL PRIOR TO CONSTRUCTION IN THE FIELD. THE FIELD INSPECTOR WILL NOT APPROVE CHANGES TO THESE APPROVED PLANS AND SPECIFICATIONS.

B. ABBREVIATIONS OR PARTIAL CODE SECTIONS NOTED ON THE PLAN AND PLAN REVIEW LIST ARE INTENDED TO INDICATE THE NATURE OF THE PLAN DEFICIENCY OR GIVE ADDITIONAL INFORMATION. THE FULL TEXT OF THE CODE, AS INDICATED BY THE CODE SECTION REFERENCED, ALWAYS APPLIES.

C. THE ISSUANCE OR GRANTING OF A PERMIT OR APPROVAL OF PLANS, SPECIFICATIONS, AND COMPUTATIONS SHALL NOT BE CONSTRUED TO BE A PERMIT FOR, OR AN APPROVAL OF, ANY VIOLATION OF ANY OF THE PROVISIONS OF THE IBC OR ANY OTHER NATIONAL CODE OF THIS JURISDICTION. PERMITS PRESUMING TO GIVE AUTHORITY TO VIOLATE OR CANCEL THE PROVISIONS OF THE IBC OR OTHER ORDINANCES OF THIS JURISDICTION SHALL NOT BE VALID.

D. APPROVAL AS A RESULT OF AN INSPECTION SHALL NOT BE CONSTRUED TO BE AN APPROVAL OF VIOLATIONS OF THE PROVISIONS OF THE IBC OR OF OTHER ORDINANCES OF THIS JURISDICTION. INSPECTIONS PRESUMING TO GIVE AUTHORITY TO VIOLATE OR CANCEL THE PROVISIONS OF THE IBC OR OF OTHER ORDINANCES OF THIS JURISDICTION SHALL NOT BE VALID.

E. THE RELOCATION OF FIRE SPRINKLER HEADS SHALL COMPLY WITH APPROVED FIRE SUPPRESSION SYSTEMS PLAN REVIEW DOCUMENTS.

F. ALTERATIONS OR REPAIRS TO ANY BUILDING OR STRUCTURE SHALL CONFORM WITH THE REQUIREMENTS OF THE PLAN REVIEW COMMENTS. ADDITIONS OR ALTERATIONS SHALL NOT BE MADE TO AN EXISTING STRUCTURE WHICH WILL CAUSE THE EXISTING BUILDING OR STRUCTURE TO BE IN VIOLATION OF ANY PROVISIONS APPLICABLE IN THE IBC.

G. NEW FIRE SPRINKLER SYSTEM OR MODIFIED EXISTING FIRE SPRINKLER SYSTEM ARE TO BE IN COMPLIANCE WITH ADOPTED VERSIONS OF NFPA 13 AND INTERNATIONAL BUILDING CODE. THE STATE FIRE MARSHAL AND LOCAL FIRE DEPARTMENT. WORK ON FIRE SPRINKLER SYSTEMS ARE TO BE CONDUCTED BY A LICENSED FIRE SPRINKLER CONTRACTOR. NEW SYSTEMS AND MODIFICATIONS TO EXISTING SYSTEMS REQUIRE SUBMISSION OF PLANS TO THE STATE FIRE MARSHAL'S OFFICE FOR REVIEW AND ACCEPTANCE PRIOR TO THE INSTALLATION OF ANY SYSTEM COMPONENTS.

KEY NOTES:

1. XXX

LIFE SAFETY LEGEND

XXX — NAME
ROOM AREA
XXX XXX — OCCUPANCY LOAD FACTOR
XXX — OCCUPANT LOAD
XXX — OCCUPANCY TYPE

EXIT — BUILDING EXIT & OVERHEAD EXIT SIGNAGE PER JURISDICTION REQUIREMENTS

FEC — FIRE EXTINGUISHER - PROVIDE LARSEN'S MP10 FIRE EXTINGUISHER W/ VERTICAL DUO 2-1/2" SEMI-RECESSED CABINET OR APPROVED EQUAL.

START
STOP
EXIT ACCESS PATH
CONT. OF PATH FROM FLOOR ABOVE OR BELOW
EXIT
DISTANCE
END EXIT ACCESS
COMMON PATH OF EGRESS TRAVEL

FIRE RATED WALL - SEE KEYNOTE 1 THIS SHEET.

OCCUPANCY LOAD:

ROOM NAME	AREA	OCCUPANCY TYPE	OCCUPANCY LOAD FACTOR	OCCUPANCY LOAD	FLOOR
2ND FLOOR					
TRAINING CLASSROOM	697 SF	A3	20	35.55	2ND
STORAGE	109 SF	S1	300	0.36	2ND
RESTROOM	64 SF	ANCILLARY	0	0.00	2ND
KITCHEN/DINING	478 SF	B	100	4.78	2ND
HALL	546 SF	ANCILLARY	0	0.00	2ND
STAIR 1	118 SF	ANCILLARY	0	0.00	2ND
POLE	41 SF	S1	200	0.21	2ND
JANITOR	28 SF	ANCILLARY	0	0.00	2ND
FITNESS	613 SF	B	50	12.34	2ND
DAYROOM	532 SF	B	100	5.32	2ND
PATIO	390 SF	B	100	3.90	2ND
	3616 SF			62.46	

ARCHITECT:

COLE ARCHITECTS

COLE ARCHITECTS | 802 W. BANNOCK SUIT 208
Boise, ID 83702 | (208) 345-1800

TCA architecture • planning
TCA | 6211 Roosevelt Way NE
Seattle, WA 98115 | (206) 522-3820

STAMP:

NOT FOR CONSTRUCTION

CONSULTANT:

PROJECT INFORMATION:

City of Boise Fire Station 4

8485 W Ustick Rd, Boise, ID 83704

REVISIONS:

MARK	DATE	DESCRIPTION

PROJECT PHASE	75% CD'S
PROJECT NUMBER	15-27
PROJECT MANAGER	J. Chatfield
PROJECT ARCHITECT	J. Chatfield
DESIGN	J. Chatfield
DRAWN BY	J. Chatfield, C. Clay, R. Stewart

SHEET NAME:

2ND FLOOR CODE ANALYSIS & LIFE SAFETY PLAN

SHEET NUMBER:

G004

02.02.16

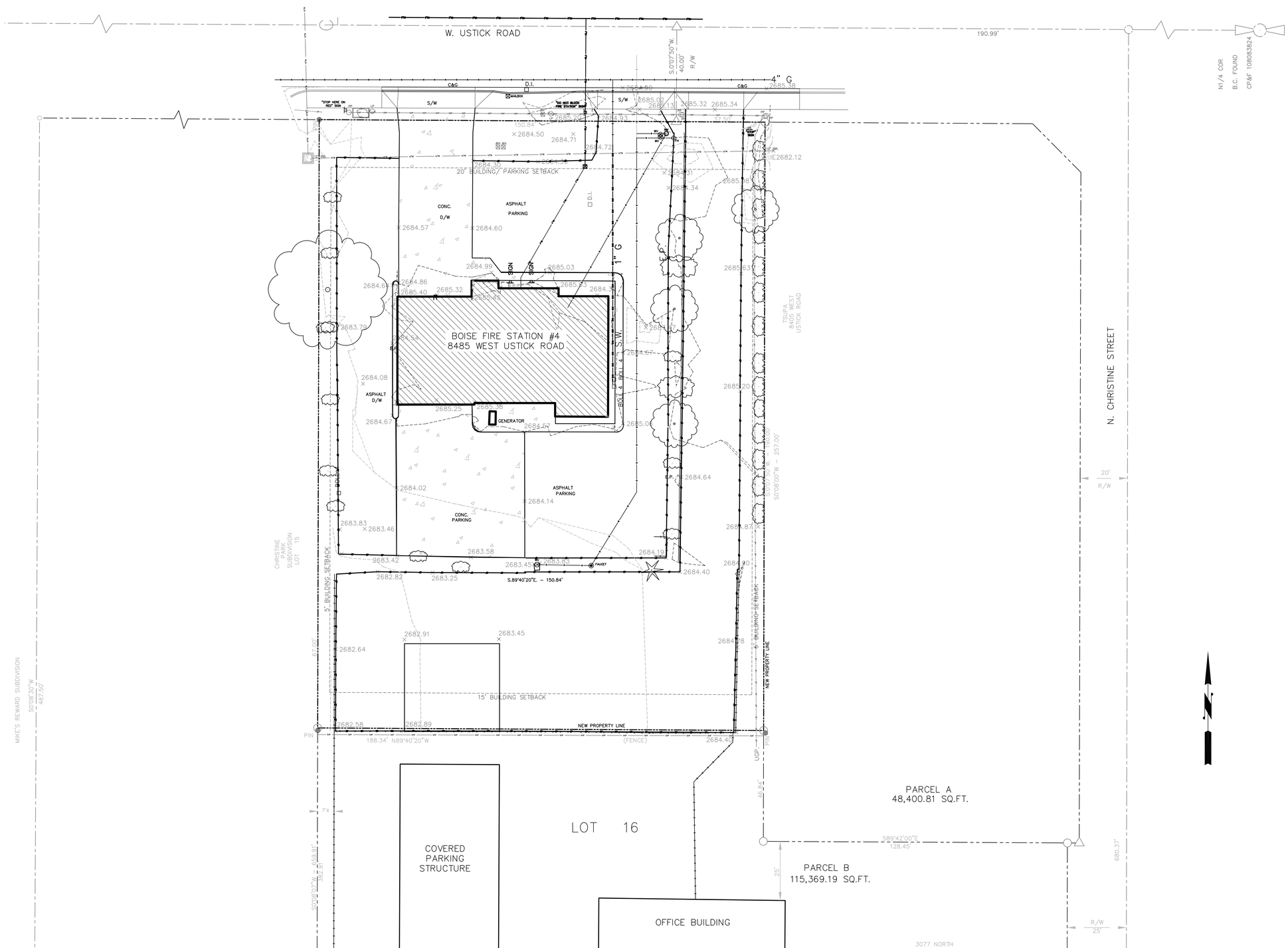

20 10 0 20 40 HORIZONTAL SCALE	DESIGNED: SJD. DRAWN: SJD CHECKED: T.C.	DATE: APRIL 2015 SECTION 1, T. 3 N., R. 1 E. FILE NO.: PWE\PWE771\TOPO	PUBLIC WORKS DEPARTMENT 150 N. CAPITOL BLVD. BOISE, IDAHO 83702 (208) 384-3900	TOPOGRAPHIC MAP BOISE CITY FIRE DEPARTMENT	PLAN VIEW	SHEET 1 OF 1 PROJECT NUMBER: PWE 771

1 SITE SURVEY
SCALE: 1" = 20' - 0"

0 10' 20' 40'

811 Know what's below. Call before you dig.
CALL 2 BUSINESS DAYS IN ADVANCE BEFORE YOU DIG, GRADE, OR EXCAVATE FOR THE MARKING OF UNDERGROUND MEMBER UTILITIES

ARCHITECT:

COLE ARCHITECTS

COLE ARCHITECTS | 802 W. BANNOCK SUIT 208
Boise, ID 83702 | (208) 345-1800

TCA architecture • planning

TCA | 6211 Roosevelt Way NE
Seattle, WA 98115 | (206) 522-3820

STAMP:

NOT FOR CONSTRUCTION

CONSULTANT:

BRECKON landdesign

- Landscape Architecture
- Erosion & Sediment Control
- Geographic Info Systems
- Graphic Communication
- Water Management
- Irrigation Design
- Land Planning

www.breckonlanddesign.com
Fax: 208-376-6528
Phone: 208-376-5153
181 East 50th Street
Garden City, Idaho 83714

PROJECT INFORMATION:

BOISE CITY OF TREES

BOISE FIRE Est. 1878 DEDICATION

City of Boise Fire Station 4

8485 W. Ustick Rd. Boise, ID 83704

REVISIONS:

MARK	DATE	DESCRIPTION

PROJECT PHASE	Project Status
PROJECT NUMBER	15043
PROJECT MANAGER	R. TeBeau
PROJECT ARCHITECT	R. TeBeau
DESIGN	JB
DRAWN BY	JB, LP, JR

SHEET NAME:

SITE SURVEY

SHEET NUMBER:

C1.10

1.29.16

S:_projects\2015\15043 boise fire #4\CAD\15043 110 survey04.dwg plotted by: user01 on Mon, February 1 2016 at 05:16 PM

SUMMARY NOTES

1. LIMITS OF WORK ARE IDENTIFIED ON PLANS.
2. TECHNICAL SPECIFICATIONS ARE AN INTEGRAL PART OF THESE DRAWINGS. UPON SUBMITTAL OF A BID PRICE BY THE CONTRACTOR, IT IS RECOGNIZED THAT THE CONTRACTOR HAS REVIEWED THE TECHNICAL SPECIFICATIONS AND THE CONTRACTOR AGREES TO ABIDE BY THE REQUIREMENTS AND CONDITIONS CONTAINED THEREIN. THIS INCLUDES SPECIFICATIONS BOUND SEPARATELY INCLUDING DIVISION ONE SECTIONS AND SPECIFICATIONS FOUND ON THE DRAWINGS.
3. THE CONTRACTOR SHALL AT ALL TIMES COORDINATE HIS WORK WITH THAT OF OTHERS ON THE SITE. THE CONTRACTOR SHALL HAVE A RESPONSIBLE PARTY WHO SHALL HAVE THE AUTHORITY TO REPRESENT AND ACT FOR THE CONTRACTOR ON THE JOB SITE DURING ALL WORKING HOURS.
4. THE CONTRACTOR IS RESPONSIBLE FOR PERFORMING ALL WORK INDICATED IN THESE PLANS AND SPECIFICATIONS. ANY ITEM INDICATED IN THESE PLANS, BUT NOT ITEMIZED IN THE BID SCHEDULE, WILL BE INCLUDED UNDER A BID SCHEDULE ITEM TO WHICH IT MOST PERTAINS.
5. THE CONTRACTOR SHALL EXAMINE THE SITE, COMPARE IT WITH THE PLANS AND SPECIFICATIONS, CAREFULLY EXAMINE ALL OF THE CONTRACT DOCUMENTS, AND SATISFY HIMSELF AS TO THE CONDITIONS UNDER WHICH THE WORK IS TO BE PERFORMED BEFORE ENTERING INTO CONTRACT. NO ALLOWANCE SHALL SUBSEQUENTLY BE MADE ON BEHALF OF THE CONTRACTOR ON ACCOUNT OF AN ERROR ON HIS PART AND/OR HIS NEGLIGENCE AND/OR FAILURE TO ACQUAINT HIMSELF WITH THE CONDITIONS OF THE SITE.
6. THE CONTRACTOR SHALL CONTACT DIGLINE 72 HOURS PRIOR TO ANY EXCAVATION. 1-800-342-1585.
7. THE CONTRACTOR SHALL BE RESPONSIBLE FOR ANY DAMAGE TO THE EXISTING STREETS OR SIDEWALKS DURING THE CONSTRUCTION OF THIS PROJECT, AND SHALL REPAIR SUCH DAMAGE TO THE SATISFACTION OF THE GOVERNING AGENCY, AT NO EXTRA COST TO THE OWNER.
8. ALL MATERIALS AND FINISHES SHALL BE AS PER DRAWINGS, DETAILS AND SPECIFICATIONS. SOME MATERIALS MAY REQUIRE SEVERAL WEEK ORDER LEAD TIME. CONTRACTOR IS RESPONSIBLE FOR DETERMINING ANY AND ALL ORDERING LEAD TIMES, AND PROVIDING REQUIRED MATERIALS AT THE PROJECT SITE IN A TIMELY MANNER. NO UNAPPROVED SUBSTITUTIONS WILL BE ALLOWED. CONTACT BRECKON LAND DESIGN IMMEDIATELY IF A SPECIFIED MATERIAL IS NOT AVAILABLE.
9. ALL EXISTING CONDITIONS AND STRUCTURES, NOT SPECIFICALLY NOTED FOR REMOVAL, SHALL BE RETAINED AND PROTECTED. EXISTING CONDITIONS AND STRUCTURES THAT ARE DAMAGED DURING THE COURSE OF CONSTRUCTIONS SHALL BE REPLACED BY THE CONTRACTOR AT NO ADDITIONAL COST TO THE OWNER.
10. ALL CONTRACTORS WORKING WITHIN THE PUBLIC RIGHT-OF-WAY ARE REQUIRED TO SECURE A RIGHT-OF-WAY CONSTRUCTION PERMIT, AT LEAST 72 HOURS PRIOR TO ANY CONSTRUCTION.
11. ALL CONSTRUCTION IN THE PUBLIC RIGHT-OF-WAY SHALL CONFORM TO THE LATEST EDITION OF THE ISPWC AND THE GOVERNING AGENCY'S SUPPLEMENTAL SPECIFICATIONS. NO EXCEPTIONS TO THESE STANDARDS WILL BE ALLOWED UNLESS SPECIFICALLY AND PREVIOUSLY APPROVED IN WRITING BY THE GOVERNING AGENCY.
12. THE CONTRACTOR SHALL PERFORM ALL CLEARING AND SITE PREPARATION NECESSARY FOR THE PROPER EXECUTION OF ALL WORK INDICATED ON THESE PLANS AND SPECIFICATIONS.
13. ALL WORK IS TO BE PERFORMED BY LICENSED CONTRACTORS AND EXPERIENCED WORKERS.
14. CONTRACTOR SHALL OBTAIN AND PAY FOR ALL PERMITS NECESSARY TO COMPLETE THE WORK, UNLESS OTHERWISE NOTED.
15. CONTRACTOR SHALL CONFORM TO ALL LOCAL CODES.
16. ALL WORK SHALL CONFORM TO THE GEOTECHNICAL ENGINEERING SPECIFICALLY PREPARED FOR THIS PROJECT, CONTACT THE ARCHITECT TO OBTAIN A COPY OF THE REPORT.
17. BRECKON LAND DESIGN, INC. DOES NOT AND CANNOT GUARANTEE THE ACCURACY OF WORK DONE BY OTHERS AND INCLUDES THIS INFORMATION FOR THE CONVENIENCE OF THE CONTRACTOR ONLY. THE CONTRACTOR IS RESPONSIBLE TO CONTACT THE OWNER'S REPRESENTATIVE TO REQUEST CLARIFICATION OF DISCREPANCIES BETWEEN THE INFORMATION SHOWN ON THIS PLAN AND INFORMATION SHOWN ELSEWHERE. IN THE EVENT THE CONTRACTOR PROCEEDS WITH CONSTRUCTION WITHOUT OFFICIAL CLARIFICATION FROM THE OWNER'S REPRESENTATIVE, HE SHALL BE LIABLE FOR THE COST OF CORRECTIVE WORK AND SHALL REPAIR OR RECONSTRUCT THE FAULTY WORK TO THE SATISFACTION OF THE OWNER'S REPRESENTATIVE AT NO ADDITIONAL COST TO THE OWNER.
18. THE CONTRACTOR IS RESPONSIBLE FOR PROVIDING, ERECTING AND MAINTAINING THE REQUIRED MATERIALS, EQUIPMENT AND MANPOWER NECESSARY FOR PUBLIC SAFETY AND TRAFFIC CONTROL WITHIN THE PROJECT LIMITS AND ON THE APPROACHES TO THE PROJECT.
19. THE CONTRACTOR AGREES THAT IN ACCORDANCE WITH GENERALLY ACCEPTED CONSTRUCTION PRACTICES, CONTRACTOR SHALL BE REQUIRED TO ASSUME SOLE AND COMPLETE RESPONSIBILITY FOR JOB SITE CONDITIONS DURING THE COURSE OF CONSTRUCTION OF THE PROJECT, INCLUDING THE SAFETY OF ALL PERSONS AND PROPERTY, AND THAT THIS REQUIREMENT SHALL BE MADE TO APPLY CONTINUOUSLY AND NOT BE LIMITED TO NORMAL WORKING HOURS. CONTRACTOR FURTHER AGREES TO DEFEND, INDEMNIFY, AND HOLD DESIGN PROFESSIONAL HARMLESS FROM ANY AND ALL LIABILITY, REAL AND ALLEGED, IN CONNECTION WITH THE PERFORMANCE OF WORK ON THIS PROJECT, EXCEPTING LIABILITY ARISING FROM THE SOLE NEGLIGENCE OF THE DESIGN PROFESSIONAL.
20. IF ANY ARCHEOLOGICAL, CULTURAL OR HISTORICAL RESOURCES, OR ARTIFACTS OR OTHER FEATURES ARE DISCOVERED DURING THE COURSE OF CONSTRUCTION ANYWHERE ON THE PROJECT SITE, WORK SHALL BE SUSPENDED IN THAT LOCATION UNTIL A QUALIFIED PROFESSIONAL ARCHEOLOGIST ASSESSES THE SIGNIFICANCE OF THE DISCOVERY. THE OWNER SHALL BE NOTIFIED IMMEDIATELY OF ANY FINDS. IN CONSULTATION WITH THE ARCHEOLOGIST AND THE GOVERNING AGENCY, APPROPRIATE MEASURES FOR PRESERVATION SHALL BE ESTABLISHED PRIOR TO THE COMMENCEMENT OF WORK.
21. THE LOCATION OF EXISTING UNDERGROUND UTILITIES ON THESE PLANS ARE APPROXIMATE. A REASONABLE EFFORT HAS BEEN MADE TO LOCATE AND DELINEATE ALL UNDERGROUND FACILITIES, HOWEVER BRECKON LAND DESIGN, INC. ASSUMES NO LIABILITY FOR THE ACCURACY OR COMPLETENESS OF THE EXISTING FACILITIES SHOWN HERE OR FOR THE EXISTENCE OF OTHER UNDERGROUND UTILITIES OR OBJECTS WHICH MAY BE DISCOVERED BUT ARE NOT SHOWN ON THESE PLANS. THE CONTRACTOR SHALL DETERMINE THE EXACT LOCATION OF ANY EXISTING UTILITIES BEFORE COMMENCING WORK, AND AGREES TO BE FULLY RESPONSIBLE FOR ANY AND ALL DAMAGE DUE TO CONTRACTOR'S FAILURE TO EXACTLY LOCATE AND PRESERVE ANY AND ALL UNDERGROUND UTILITIES.
22. IN THE EVENT OF A DISCREPANCY, NOTIFY BRECKON LAND DESIGN IMMEDIATELY.

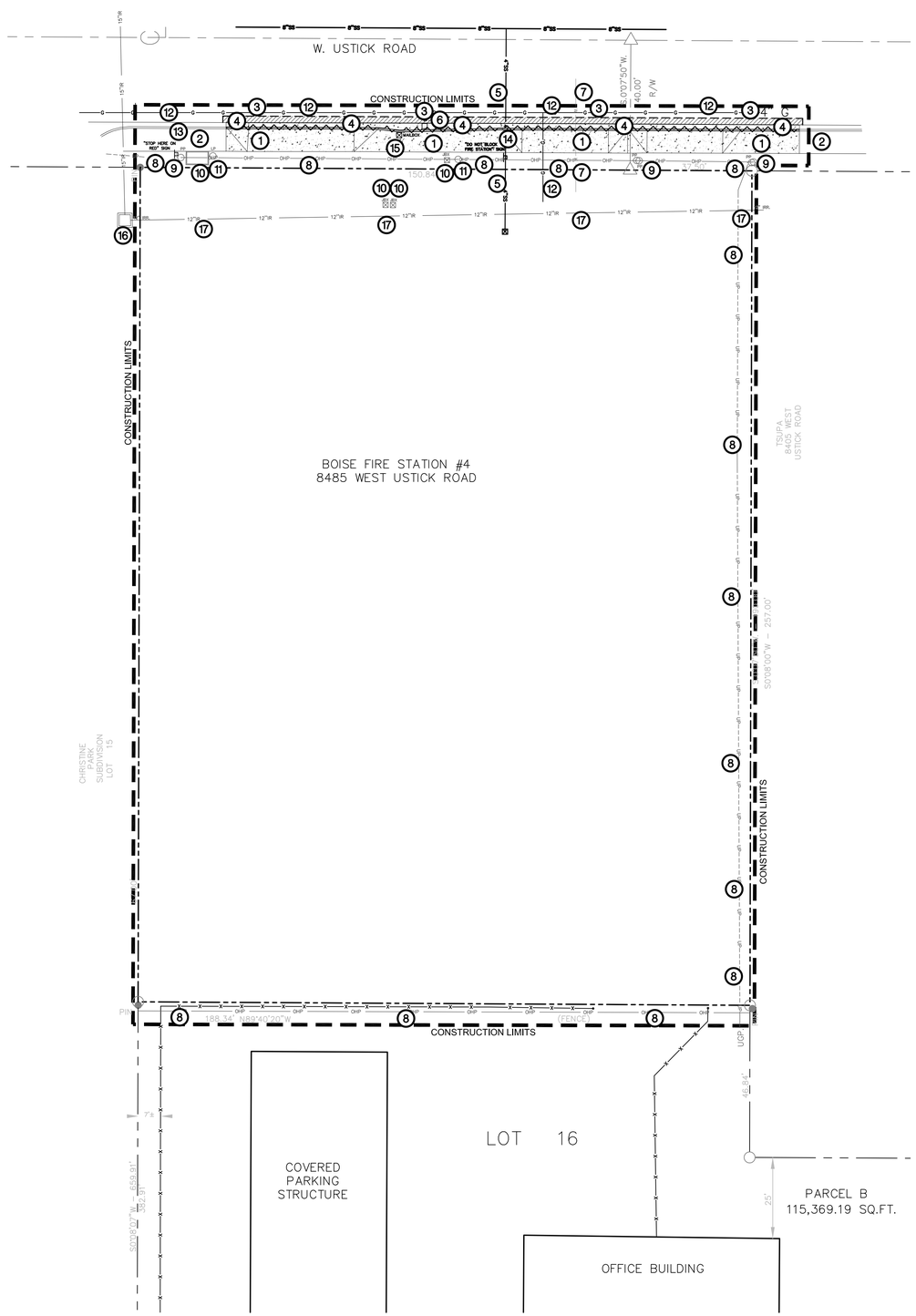

1 DEMOLITION PLAN
SCALE: 1" = 20' - 0"

DEMOLITION LEGEND

- EXISTING PLANTS TO REMAIN
- EXISTING PLANTS TO BE REMOVED
- CONSTRUCTION LIMITS
- EXISTING CURB TO BE REMOVED
- APPROXIMATE AREA OF ASPHALT REMOVAL
- APPROXIMATE AREA OF CONCRETE REMOVAL

DEMOLITION NOTES

1. COORDINATE ALL DEMOLITION, GRADING, AND EARTHWORK OPERATIONS WITH MECHANICAL, AND ELECTRICAL ENGINEERING SHEETS.
2. CONTRACTOR SHALL REFER TO SPECIFICATIONS AND DETAILS FOR ADDITIONAL REQUIREMENTS.
3. LIMITS OF WORK ARE IDENTIFIED ON PLANS.
4. IN THE EVENT OF A DISCREPANCY, NOTIFY THE LANDSCAPE ARCHITECT IMMEDIATELY.

DEMOLITION CALLOUT LEGEND

1. SAWCUT AND REMOVE EXISTING CONCRETE FLAT WORK AS DELINEATED. COORDINATE WITH LAYOUT PLAN.
2. SAVE AND PROTECT EXISTING CONCRETE FLAT WORK.
3. SAWCUT AND REMOVE EXISTING ASPHALT.
4. REMOVE EXISTING CONCRETE CURB AND GUTTER.
5. SAVE AND PROTECT EXISTING SANITARY SEWER SERVICE.
6. SAVE AND PROTECT EXISTING STORM DRAIN INLET AND ASSOCIATED PIPING.
7. SAVE AND PROTECT EXISTING WATER LINE.
8. SAVE AND PROTECT EXISTING UNDERGROUND AND OVERHEAD POWER LINES.
9. SAVE AND PROTECT EXISTING POWER POLE, LIGHT POLE AND GUY WIRES.
10. SAVE AND PROTECT TRAFFIC SIGNAL BOX AND ASSOCIATED WIRING.
11. SAVE AND PROTECT EXISTING TRAFFIC SIGNAL POLE AND ASSOCIATED WIRING.
12. SAVE AND PROTECT EXISTING GAS LINE.
13. SAVE AND PROTECT EXISTING SIGN.
14. REMOVE EXISTING SIGN.
15. REMOVE AND RELOCATE EXISTING MAILBOX, COORDINATE AS REQUIRED.
16. SAVE AND PROTECT CONCRETE GRAVITY IRRIGATION BOX.
17. SAVE AND PROTECT EXISTING 12" IRRIGATION PIPE.

811 Know what's below. Call before you dig.
CALL 2 BUSINESS DAYS IN ADVANCE BEFORE YOU DIG, GRADE, OR EXCAVATE FOR THE MARKING OF UNDERGROUND MEMBER UTILITIES

ARCHITECT:

COLE ARCHITECTS
COLE ARCHITECTS | 802 W. BANNOCK SUIT 208
Boise, ID 83702 | (208) 345-1800
TCA architecture • planning
TCA | 6211 Roosevelt Way NE
Seattle, WA 98115 | (206) 522-3820

STAMP:

STATE OF IDAHO — JOHN S. BRECKON — LICENSED LANDSCAPE ARCHITECT
NOT FOR CONSTRUCTION

CONSULTANT:

BRECKON landdesign
• Landscape Architecture
• Erosion & Sediment Control
• Geographic Info Systems
• Graphic Communication
• Water Management
• Irrigation Design
• Land Planning
www.breckonlanddesign.com
Fax: 208-376-6528
Phone: 208-376-5153
181 East 50th Street
Garden City, Idaho 83714

PROJECT INFORMATION:

BOISE CITY OF TREES
BOISE FIRE EST. 1891 DEDICATION

City of Boise Fire Station 4
8485 W. Ustick Rd. Boise, ID 83704

REVISIONS:

MARK	DATE	DESCRIPTION

PROJECT PHASE	Project Status
PROJECT NUMBER	15043
PROJECT MANAGER	R. TeBeau
PROJECT ARCHITECT	R. TeBeau
DESIGN	JB
DRAWN BY	JB, LP, JR

SHEET NAME:

DEMOLITION PLAN

SHEET NUMBER:

C1.20

1.29.16

S:_projects\2015\15043 boise fire #4\CAD\15043 120 demo04.dwg plotted by user01 on Mon, February 1 2016 at 05:21 PM

LAYOUT NOTES

1. ESTABLISH SITE LAYOUT GRID FROM POINT OF BEGINNING (P.O.B.) AT THE PK NAIL LOCATED ALONG THE NORTH PROPERTY LINE (SURVEY CONTROL POINT #3) WITH AN ASSUMED COORDINATE OF N:704,262.33' E:2,515,334.03' (VERIFY). ESTABLISH 2ND POINT AT THE MAG NAIL ALONG THE NORTH PROPERTY LINE (SURVEY CONTROL POINT #4) AT 226.53', N 50d 50' 11" E FROM THE P.O.B. WITH AN ASSUMED COORDINATE OF N:704,405.40' E:2,515,514.67 (VERIFY)
2. ADD N:704,000.00', E:2,515,000.00' TO ALL COORDINATE POINTS SHOW IN DRAWING.
3. REFER CLOSELY TO BUILDING LAYOUT DRAWINGS IN RELATION TO SITE LAYOUT ITEMS. CONTRACTOR TO VERIFY LISTED DIMENSIONS PRIOR TO CONSTRUCTION.
4. CONTRACTOR TO VERIFY LOCATION OF ALL UTILITIES PRIOR TO INITIATION OF ANY DEMOLITION OR CONSTRUCTION OPERATIONS. ANY DAMAGE TO EXISTING UTILITIES ON SITE OR ADJACENT PROPERTY SHALL BE CONTRACTOR'S RESPONSIBILITY.
5. COORDINATE INSTALLATION OF ELECTRICAL AND IRRIGATION CONDUIT AND SLEEVES WITH RESPECTIVE CONTRACTORS.
6. CONTRACTOR IS RESPONSIBLE FOR ALL CONSTRUCTION STAKING. STAKING SHALL BE PERFORMED BY REGISTERED LAND SURVEYOR WITHIN THE STATE OF THE PROJECT.
7. ALL ANGLES TO BE TURNED ARE 45D, 90D, OR 135D UNLESS OTHERWISE NOTED.
8. ALL DIMENSIONS ARE TO FACE OF CURB, EDGE OF WALK, EDGE OF PAVEMENT, EDGE OF FOUNDATION, EDGE OF WALLS OR CENTER OF POST.
9. THE CONTRACTOR SHALL VERIFY ALL DIMENSIONS DISTANCES AND GRADES IN THE FIELD AND BRING ANY DISCREPANCIES TO THE ATTENTION OF THE LANDSCAPE ARCHITECT FOR A DECISION PRIOR TO COMMENCING WITH THE WORK.
10. WHEREVER CONCRETE FLATWORK ABUTS BUILDINGS OR COLUMNS IT SHALL HAVE AN EXPANSION JOINT.
11. PROVIDE JOINTS AS SHOWN ON PLANS. JOINTS ARE AN INTEGRAL PART OF THE DESIGN AND SHALL NOT VARY FROM PATTERNS AND LOCATIONS SHOWN. CONTRACTOR SHALL REMOVE ANY FLATWORK THAT DOES NOT CONFORM TO DESIGN.
12. ALL WALKS AND FLATWORK SHALL BE ESTABLISHED IN THE FIELD FOR REVIEW AND APPROVAL. THE CONTRACTOR SHALL LAYOUT THE AREA OR FORM WORK FOR REVIEW BY THE LANDSCAPE ARCHITECT. AFTER REVIEW AND NECESSARY MODIFICATIONS AS DIRECTED BY THE LANDSCAPE ARCHITECT, THE CONTRACTOR SHALL PROCEED WITH CONSTRUCTION. IF APPROVAL IS NOT OBTAINED, THE CONTRACTOR IS RESPONSIBLE FOR REMOVAL OF ANY UNAUTHORIZED FIELD ADJUSTMENTS.
13. TRANSITION OF CURVES TO OTHER CURVES AND CURVES TO TANGENTS SHALL BE SMOOTH AND CONTINUOUS.
14. LOCATION OF ALL SITE FURNISHINGS SHALL BE APPROVED BY LANDSCAPE ARCHITECT PRIOR TO INSTALLATION.
15. CONTRACTOR SHALL REFER TO SPECIFICATIONS AND DETAILS FOR ADDITIONAL REQUIREMENTS.
16. SEE ELECTRICAL SHEETS AND SPECIFICATIONS FOR ADDITIONAL INFORMATION. ALL LIGHT POLE BASES ADJACENT TO SIDEWALKS OR IN LAWN AREAS ARE TO RECEIVE CONCRETE APRON- SEE DETAIL.
17. ALL ACCESSIBLE PARKING STALLS AND SIGNS SHALL CONFORM TO ALL FEDERAL, STATE, AND LOCAL REQUIREMENTS FOR ACCESSIBLE PARKING.
18. CONTRACTOR RESPONSIBLE FOR ANY DAMAGE TO NEW OR EXISTING IMPROVEMENTS INCLUDING LANDSCAPE AREAS AS A RESULT OF CONSTRUCTION ACTIVITIES.
19. LAYOUT PROJECT AS DESIGNED. CONTRACTOR SHALL REMOVE WORK THAT DOES NOT CONFORM TO DRAWINGS AND SPECIFICATIONS.
20. REFER TO MATERIALS AND SIGNAGE PLAN FOR FINISHED SITE MATERIALS, STRIPING, AND SIGNAGE INFORMATION. ALL SIGN POLES LOCATED IN LAWN AREAS ARE TO RECEIVE CONCRETE APRONS.
21. IN THE EVENT OF A DISCREPANCY, IMMEDIATELY NOTIFY THE LANDSCAPE ARCHITECT.

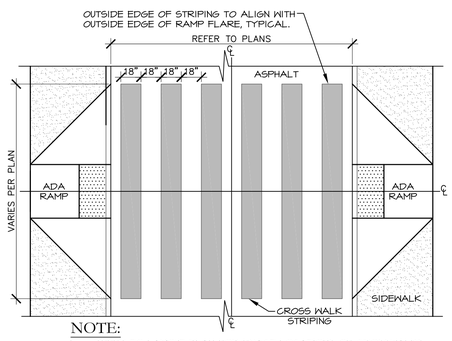

NOTE:
1. REFER TO LAYOUT PLAN FOR EXACT LOCATIONS OF CROSSWALKS.
2. CROSS WALK STRIPING SHALL BE SOLID WHITE.
3. PAVEMENT MARKINGS SHALL BE PER I.S.P.W.C. SECTION 1104.

1 CROSSWALK STRIPING

Scale: 3/16" = 1'-0"

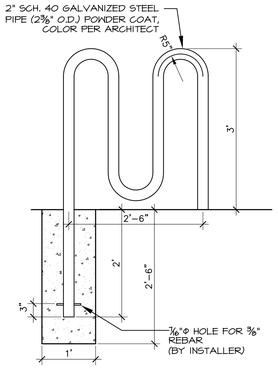

2 BIKE RACK

Scale: 3/4" = 1'-0"

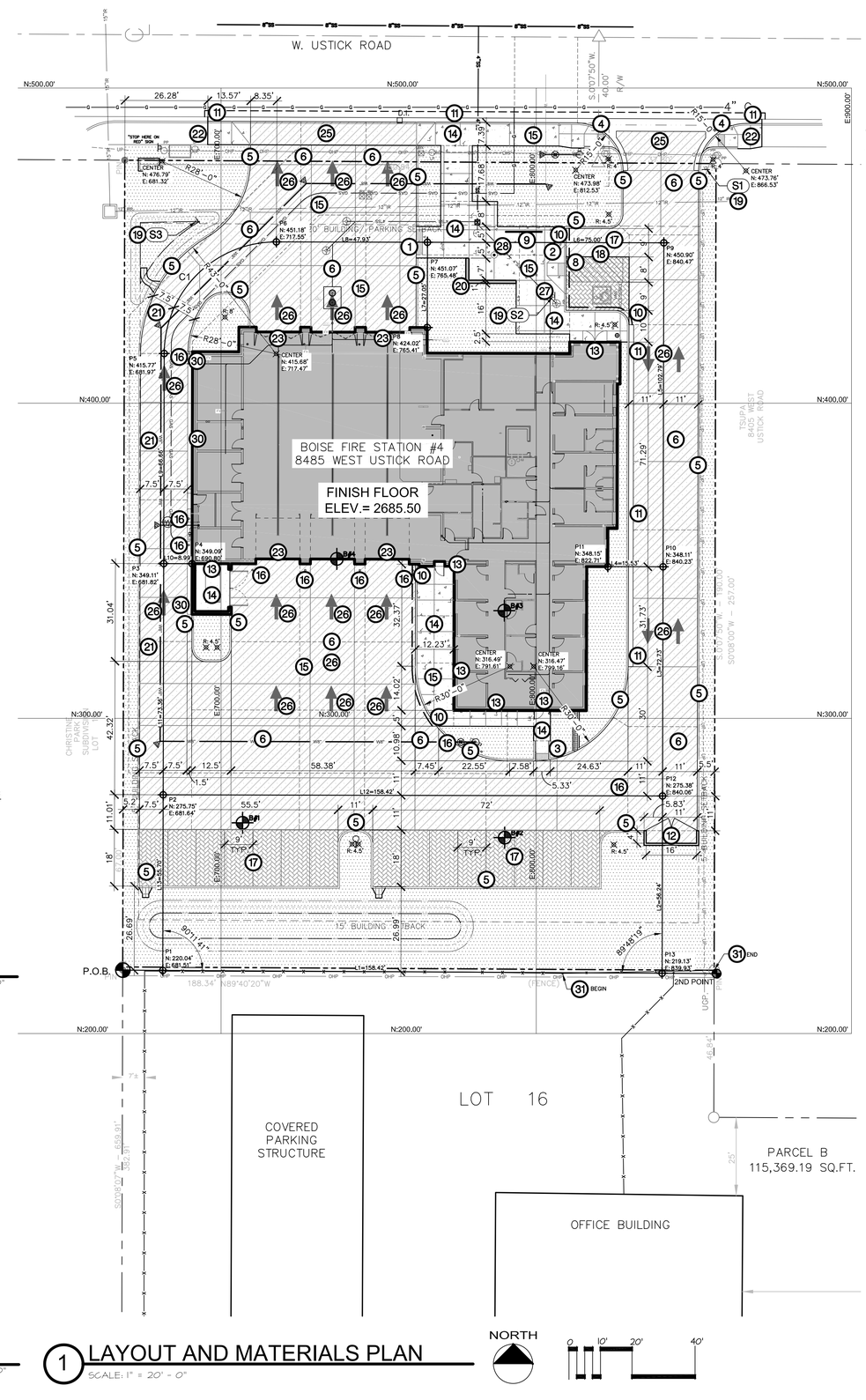

1 LAYOUT AND MATERIALS PLAN

SCALE: 1" = 20' - 0"

LAYOUT LEGEND

- P.O.B. / 2ND POINT — PROPERTY LINE (VERIFY)
- POINT OF BEGINNING FOR GRID ESTABLISHMENT
- SECOND POINT FOR GRID ESTABLISHMENT
- GRID LINE
- BASELINE
- TURN POINT
- CURVE (SEE CURVE TABLE)
- COORDINATE POINT
- SOIL TESTING LOCATION - SEE SPECIFICATIONS
- BIKE RACK AS SPECIFIED
- CONCRETE WHEEL STOP
- TRASH RECEPTACLE AS SPECIFIED
- INTEGRAL CURB / WALK LOCATION
- FIRE LANE STRIPING SEE DETAIL.
- VERTICAL CURBING LOCATION
- CURB AND GUTTER LOCATION
- SCORE JOINT (TYPICAL)
- EXPANSION JOINT (TYPICAL)
- ACCESSIBLE RAMP LOCATION WITH DETECTABLE WARNING SURFACE
- NEW CONCRETE FLATWORK
- SITE SIGNAGE IDENTIFICATION
- SIGN LOCATION- ALL SIGN POLES LOCATED IN TURF AREAS TO RECEIVE CONCRETE MONSTRIPS- SEE DETAIL
- LIGHT POLE WITH CONCRETE APRON
- LIGHT POLE WITHOUT CONCRETE APRON

(SEE ELECTRICAL SHEETS AND DIV. 16 SPECIFICATIONS FOR ADDITIONAL INFORMATION. ALL LIGHT POLE AND BOLLARD BASES ADJACENT IN LAWN AREAS ARE TO RECEIVE CONCRETE MOW STRIPS- SEE DETAIL)

MATERIAL NOTES

1. REFER TO DETAIL DRAWINGS AND SPECIFICATIONS FOR ADDITIONAL CONSTRUCTION REQUIREMENTS.
2. ALL ACCESSIBLE PARKING STALLS AND SIGNS SHALL CONFORM TO ALL FEDERAL, STATE, AND LOCAL REQUIREMENTS FOR ACCESSIBLE PARKING.
3. REFER TO SIGN BASE DETAIL FOR INSTALLATION OF ALL SIGNS.
4. REFER TO PLANTING PLANS FOR 'SOFT' MATERIAL LOCATIONS.
5. ALL SIGNS SHALL BE THE SIZE LISTED. COLORS TO BE DETERMINED UPON SHOP DRAWING SUBMITTAL.
6. IN THE EVENT OF A DISCREPANCY, IMMEDIATELY NOTIFY LANDSCAPE ARCHITECT.

811 Know what's below. Call before you dig.
CALL 2 BUSINESS DAYS IN ADVANCE BEFORE YOU DIG, GRADE, OR EXCAVATE FOR THE MARKING OF UNDERGROUND MEMBER UTILITIES

MATERIAL LEGEND

- REINFORCED CONCRETE SLAB AS DETAILED
- CONCRETE FLATWORK WITH AGGREGATE BASE AS DETAILED
- LARGE ROCK MULCH OVER APPROVED TOPSOIL AND PRE-EMERGENT HERBICIDE APPLICATION AS SPECIFIED.
- PROPOSED BUILDINGS
- PERMEABLE PAVERS AS SPECIFIED AND DETAILED

SIGNAGE LEGEND

S1 — STOP (30" x 30")

S2 — RESERVED PARKING; VAN ACCESSIBLE — STATE APPROVED DISABLED PARKING SIGN 12"x 18"; PROVIDE VAN SIGN WHERE APPLICABLE 12"x 6"

S3 — EXIT ONLY / DO NOT ENTER (18" x 24")

PAINTED STRIPING

ALL PAINT TO BE 100% ACRYLIC MARKING PAINT, MEETING FEDERAL SPECIFICATIONS TTP 1952 TYPES I AND 2.
ALL SURFACES SCHEDULED TO RECEIVE PAINT FINISH. REMOVE DIRT, LOOSE MORTAR, SCALE, SALT OR ALKALI POWDER AND OTHER FOREIGN MATTER. REMOVE OIL AND GREASE WITH A SOLUTION OF TRI-SODIUM PHOSPHATE; RINSE WELL AND ALLOW TO DRY. REMOVE STAINS CAUSED BY WEATHERING OF CORODING METALS WITH A SOLUTION OF SODIUM METASILICATE AFTER THOROUGHLY WETTING WITH WATER. ALLOW TO DRY.

PAINTED STRIPING ON PAVING PARKING STALL STRIPES TO BE 4" WIDE WHITE, UNLESS NOTED OTHERWISE.
A. HANDICAP SYMBOLS SHALL BE PAINTED STANDARD BLUE.
B. "NO PARKING - FIRE ZONE" SHALL BE PAINTED RED.

PAINTED ARROWS, VERIFY EXACT LOCATION ON SITE WITH LANDSCAPE ARCHITECT. SEE DETAIL.

CALLOUT LEGEND

1. DETECTABLE WARNING, INSTALL PER MANUFACTURER'S RECOMMENDATIONS, SEE DETAIL 1/L1.35.
2. TYPE ONE ADA RAMP SEE DETAIL 2/L1.35.
3. TYPE TWO ADA RAMP SEE DETAIL 3/L1.35.
4. TYPE THREE ADA RAMP SEE DETAIL 4/L1.35.
5. 6" CONCRETE VERTICAL CURB, SEE DETAIL 6/L1.36.
6. REINFORCED CONCRETE FLATWORK, SEE DETAIL 9/L1.35.
7. THICKENED, SEE DETAIL 11/L1.35.
8. CONCRETE PARKING BUMPER, LOCATE 3'-0" FROM HEAD OF PARKING STALL, SEE DETAIL 5/L1.36.
9. BIKE RACK, SEE DETAIL 2/L1.30.
10. INTEGRAL CURB AND SIDEWALK, SEE DETAIL 4/1.36.
11. 24" CURB AND GUTTER, SEE DETAIL 3/L1.36.
12. TRASH ENCLOSURE. SEE ARCHITECTURAL PLANS.
13. CONCRETE FLATWORK AT BUILDING, SEE DETAIL 5/L1.35.
14. CONCRETE FLATWORK, SEE DETAIL 6/L1.35. (TYP.)
15. CONCRETE JOINTS, SEE DETAIL 7/L1.36. (TYP.)
16. STEEL BOLLARD LOCATION, SEE DETAIL 7/L1.36.
17. 4" WIDE WHITE PARKING LOT STRIPING, SEE DETAIL 10/L1.36.
18. ACCESSIBLE PARKING STALL LAYOUT, SEE DETAIL 11/L1.36.
19. SIGN POST AND FOOTING, SEE DETAIL 9 & 14/L1.36, TYPICAL.
20. CONCRETE SEAT WALL, SEE DETAIL2/L1.36.
21. FIRE LANE STRIPING, SEE DETAIL 9/L1.36.
22. CONCRETE FLATWORK AT EXISTING CONCRETE. SEE DETAIL 8/L1.35.
23. REINFORCED CONCRETE FLATWORK AT BUILDING. SEE DETAIL 10/L1.35.
24. CONCRETE VALLEY GUTTER APPROACH. SEE DETAIL 14/L1.35.
25. TYPICAL APPROACH. SEE DETAIL 13/L1.35.
26. PAINTED ARROWS. SEE DETAIL 8/L1.36.
27. ACCESSIBLE PARKING SIGN. DETAIL 12/L1.36.
28. FLAGPOLE AND FOOTING. FLAGPOLE SHALL HAVE LED LIGHTS ON TOP. SEE DETAIL 13/L1.36.
29. UNIT PAVER WITH CONCRETE ACCENT STRIP. SEE DETAIL 1/L1.36.
30. CONCRETE MONSTRIP. SEE DETAIL 12/L1.35.
31. 6'-0" CHAIN LINK FENCE WITH SLATS AS DETAILED AND SPECIFIED TO MATCH EXISTING.

ARCHITECT:
COLE ARCHITECTS
COLE ARCHITECTS | 802 W. BANNOCK SUIT 208
Boise, ID 83702 | (208) 345-1800
TCA architecture • planning
TCA | 6211 Roosevelt Way NE
Seattle, WA 98115 | (206) 522-3820

STAMP:
STATE OF IDAHO — NOT FOR CONSTRUCTION — JOB LANDSCAPE ARCHITECT

CONSULTANT:
BRECKON landdesign
• Landscape Architecture
• Erosion & Sediment Control
• Geographic Info Systems
• Graphic Communication
• Water Management
• Irrigation Design
• Land Planning
www.breckonlanddesign.com
Fax: 208-376-6528
Phone: 208-376-5153
181 East 50th Street
Garden City, Idaho 83714

PROJECT INFORMATION:
BOISE CITY OF TREES — BOISE FIRE Est. 1890 DEDICATION

City of Boise Fire Station 4
8485 W. Ustick Rd. Boise, ID 83704

REVISIONS:

MARK	DATE	DESCRIPTION

PROJECT PHASE	Project Status
PROJECT NUMBER	15043
PROJECT MANAGER	R. TeBeau
PROJECT ARCHITECT	R. TeBeau
DESIGN	JB
DRAWN BY	JB, LP, JR

SHEET NAME:

LAYOUT AND MATERIALS PLAN

SHEET NUMBER:

C1.30

1.29.16

S:_projects\2015\15043 boise fire #4\CAD\15043 130 im04.dwg plotted by user01 on Mon, February 1 2016 at 05:26 PM

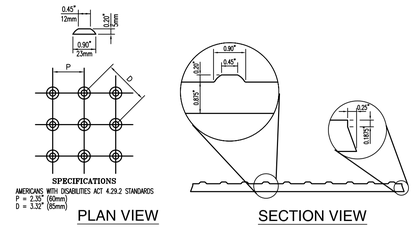

NOTE:

1. THICKEN CONCRETE SLAB UNDER TACTILE PANEL.
2. CASTINTACT DETECTABLE WARNING PANEL AS MANUFACTURED BY MASCO, OR APROVED EQUAL. INSTALL PER MANUFACTURER'S RECOMENDATIONS.

1 DETECTABLE WARNING PANEL (TRAFFIC YELLOW)

NOT TO SCALE

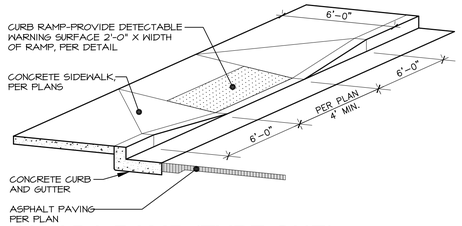

2 ADA RAMP (TYPE ONE)

NOT TO SCALE

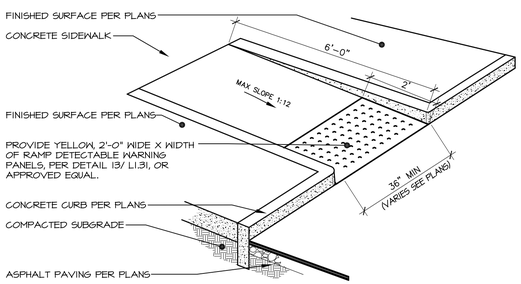

NOTES:

1. REFER TO LAYOUT PLANS FOR ACTUAL RAMP DIMENSIONS. VARIATIONS FROM THE DETAIL SHALL BE SUPERSEDED BY DIMENSIONS INDICATED ON THE PLANS.

3 ADA RAMP (TYPE TWO)

Scale: 1/2"= 1'-0"

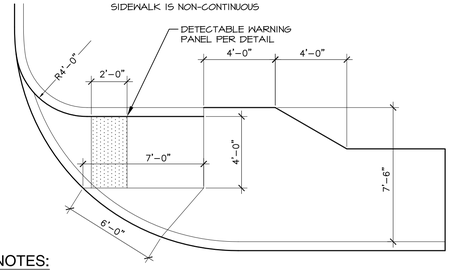

NOTES:

1. THIS TYPE OF RAMP MAY BE USED FOR LARGE COMMERCIAL APPROACHES WHERE THE STANDARD CONCRETE APPROACH IS NOT REQUIRED. THESE MAY ALSO BE USED FOR ALLEY AND PRIVATE STREET APPROACHES WHERE:
   A. THE SIDEWALK IS NOT REQUIRED TO CONTINUE AROUND THE RADIUS.
   B. A SECOND RAMP IS NOT REQUIRED TO MOVE PEDESTRIANS ACROSS THE PRIMARY STREET.
2. CURB ON RADIUS MUST BE 6" STANDARD CURB FOR SHOWN DIMENSIONS.
3. ALL RAMP SURFACES MUST BE 12 TO 1 SLOPE TO CONFIRM TO A.D.A. REQUIREMENTS. (2% MAXIMUM CROSS SLOPE)
4. THIS TYPE OF CORNER MUST HAVE A SINGLE RAMP TURNED PARALLEL TO THE PRIMARY STREET.
5. CORNER RADIUS IS 15' AS A MINIMUM.
   THE DISTRICT MAY REQUIRE LARGER RADIUS SIZES WHERE LARGER VEHICLE TURNING IS EXPECTED.
6. THE RAMP THROAT WIDTH MUST BE 4'-0" MEASURED PERPENDICULAR TO THE 7'-0" THROAT SIDE. THE RAMP THROAT DEPTH MUST BE 7'-0" MEASURED FROM THE FACE OF THE CURB TO THE BACK OF THE APPROACH. THE 7'-0" SIDE OF THE RAMP THROAT MUST BE PARALLEL WITH THE EXPECTED PATH OF THE PEDESTRIAN AND NOT PERPENDICULAR TO THE CURB FOR EXAMPLE: PARALLEL WITH THE CROSS WALK STRIPES, THE STOP BAR, OR THE PRIMARY STREET CURB.
7. THE RAMP WING MUST BE 6'-0" MEASURED AT THE CURB FACE FOR 6" STANDARD CURB. THE WING AWAY FROM THE ROAD IS ELIMINATED AND REPLACED WITH A WING SUBSTITUTE THAT IS 6" HIGH AT THE FACE OF THE STANDARD CURB AND 0" HIGH AT THE BACK OF THE RAMP AND POURED MONOLITHICALLY WITH THE RAMP.
8. ALL RAMPS MUST HAVE A MINIMUM 4'-0" X 4'-0" LANDING BEHIND THEM FOR PEDESTRIANS.
9. ALL CONCRETE ADJOINING THE RADIUS WITHIN AND AROUND THE RAMPS SHALL BE 5" THICK WITH 4" OF 3/4" AGGREGATE BASE.
10. SEE I.S.P.W.C, SD-712C TYPE "C4" FOR ADDITIONAL INFORMATION.

4 ADA RAMP (TYPE THREE)

Scale: 1/4"= 1'-0"

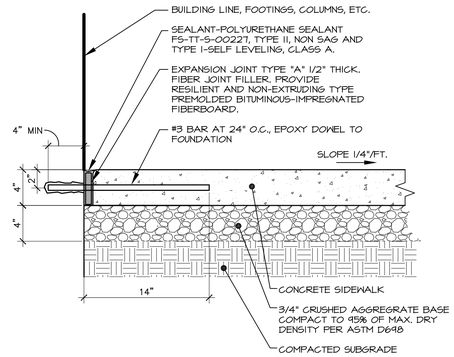

5 CONCRETE FLATWORK AT BUILDING ENTRANCES

Scale: 1-1/2"= 1'-0"

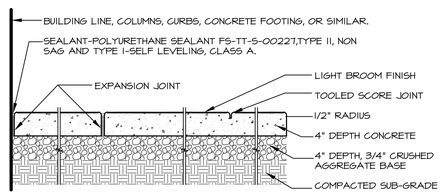

NOTES:

1. JOINTS SHALL BE SPACED EVENLY THROUGH OUT LENGTH OF WALK.

6 CONCRETE FLATWORK

Scale: 1"= 1'-0"

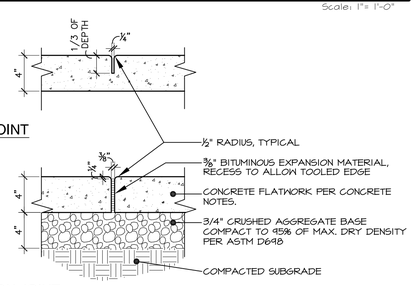

NOTE:

1. REFER TO CONCRETE NOTES FOR 28 DAY COMPRESSIVE STRENGTH REQUIREMENTS.

7 CONCRETE JOINTS

Scale: 1-1/2"= 1'-0"

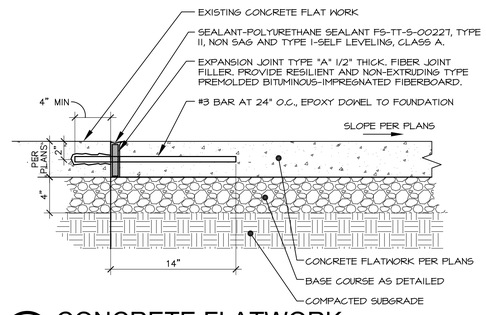

8 CONCRETE FLATWORK AT EXISTING CONCRETE

Scale: 1-1/2"= 1'-0"

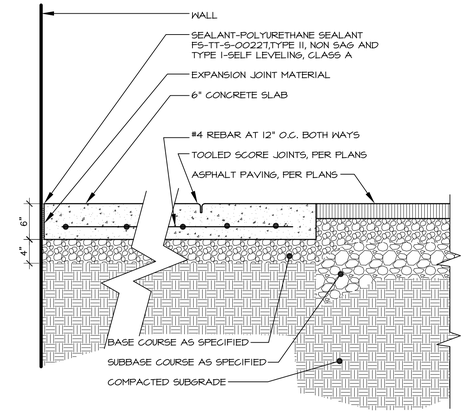

9 REINFORCED CONCRETE FLATWORK

Scale: 1"= 1'-0"

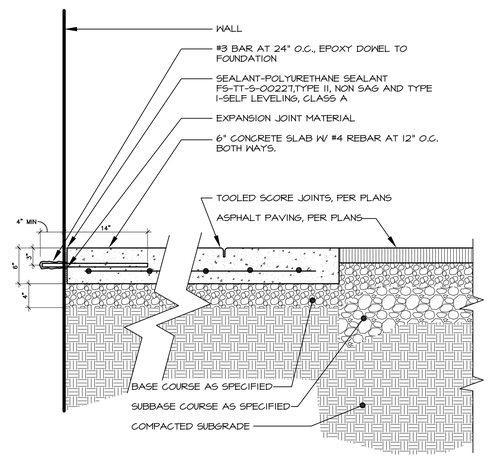

10 REINFORCED CONCRETE FLATWORK AT BUILDING

Scale: 1"= 1'-0"

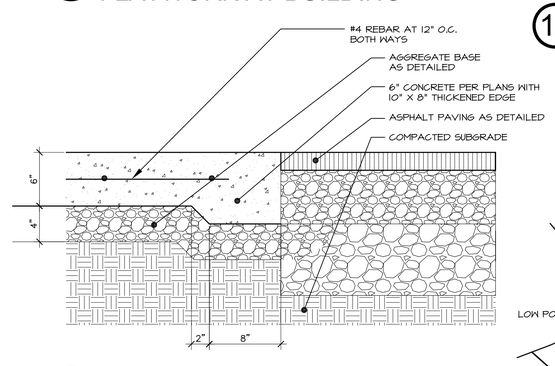

11 CONCRETE THICKENED EDGE (TYPE ONE)

Scale: 1-1/2"= 1'-0"

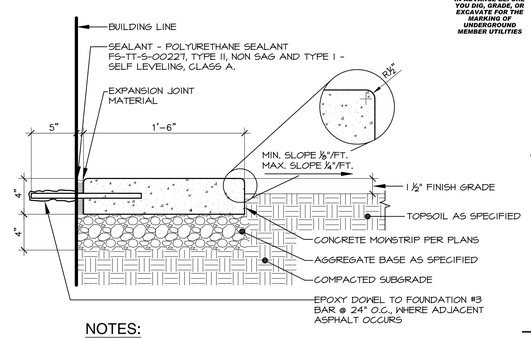

NOTES:

1. REFER TO LAYOUT PLAN FOR MOWSTRIP LOCATIONS.
2. SCORE JOINTS @ 5'-0" O.C.

12 CONCRETE MOWSTRIP

Scale: 1-1/2"= 1'-0"

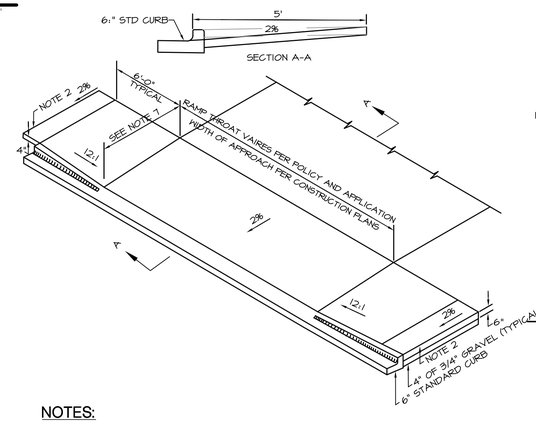

NOTES:

1. APPROACH TO CONFORM TO THE LATEST A.D.A. STANDARDS.
2. INSTALL EXPANSION JOINT AT TIP OF APPROACH WINGS AND WHERE SIDEWALK CHANGES THICKNESS.
3. BASE TO BE A 4" THICKNESS OF 3/4" MINUS CRUSHED AGGREGATE PER SECTION-802.
4. APPROACH THROAT WIDTHS SET BY POLICY AND APPLICATION. ALL CONCRETE TO BE 6" THICK FROM TIP OF WING TO TIP OF WING UP TO THE EXPANSION JOINT. WHEN SIDEWALK IS SEPARATED FROM CURB THE SIDEWALK IMMEDIATELY BEHIND THE APPROACH THROAT SHALL BE 6" THICK ALSO.
5. ALL CONCRETE SHALL BE CLASS 3000 PER SECTION-703
6. SIDEWALK WIDTH MAY VARY.
7. SEE I.S.P.W.C. SD-710B FOR FURTHER DETAILS.

13 TYPICAL APPROACH

Scale: N.T.S.

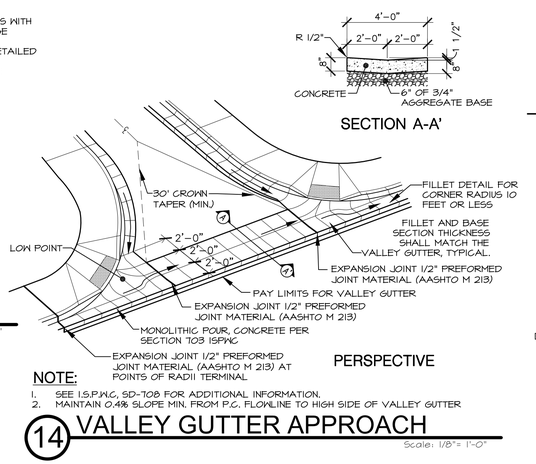

NOTE:

1. SEE I.S.P.W.C, SD-708 FOR ADDITIONAL INFORMATION.
2. MAINTAIN 0.4% SLOPE MIN. FROM P.C. FLOWLINE TO HIGH SIDE OF VALLEY GUTTER

14 VALLEY GUTTER APPROACH

Scale: 1/8"= 1'-0"

811 Know what's below. Call before you dig.

CALL 2 BUSINESS DAYS IN ADVANCE BEFORE YOU DIG, GRADE, OR EXCAVATE FOR THE MARKING OF UNDERGROUND MEMBER UTILITIES

ARCHITECT:

COLE ARCHITECTS

COLE ARCHITECTS | 802 W. BANNOCK SUIT 208
Boise, ID 83702 | (208) 345-1800

TCA architecture • planning

TCA | 6211 Roosevelt Way NE
Seattle, WA 98115 | (206) 522-3820

STAMP:

STATE OF IDAHO — JOHN S. BRECKON — LANDSCAPE ARCHITECT

NOT FOR CONSTRUCTION

CONSULTANT:

BRECKON landdesign

- Landscape Architecture
- Erosion & Sediment Control
- Geographic Info Systems
- Graphic Communication
- Water Management
- Irrigation Design
- Land Planning

www.breckonlanddesign.com
Fax: 208-376-6528
Phone: 208-376-5153
181 East 50th Street
Garden City, Idaho 83714

PROJECT INFORMATION:

BOISE CITY OF TREES

BOISE FIRE Est. 1878 DEDICATION

City of Boise Fire Station 4

8485 W. Ustick Rd. Boise, ID 83704

REVISIONS:

MARK	DATE	DESCRIPTION

PROJECT PHASE	Project Status
PROJECT NUMBER	15043
PROJECT MANAGER	R. TeBeau
PROJECT ARCHITECT	R. TeBeau
DESIGN	JB
DRAWN BY	JB, LP, JR

SHEET NAME:

LAYOUT AND MATERIALS DETAILS

SHEET NUMBER:

C1.35

1.29.16

S:_projects\2015\15043 boise fire #4\CAD\15043 130 im04.dwg plotted by user01 on Mon, February 1 2016 at 05:26 PM

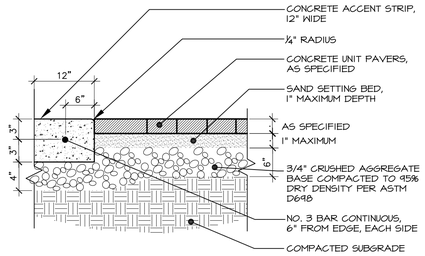

CONCRETE ACCENT STRIP NOTES:

1. SCORE JOINTS AS SHOWN ON PLAN 5'-0" O.C. MAXIMUM.
2. EXPANSION JOINTS @ 15' O.C. MAXIMUM.
3. PROVIDE EXPANSION JOINTS AT THE INTERSECTION OF STRAIGHT CURB & RADII.
4. EXPANSION JOINTS SHALL BE PREFORMED JOINT FILLER OF 3/8" THICKNESS.
5. SCORE JOINTS SHALL BE MINIMUM 1/8" WIDE, 1-1/2" DEEP, AND ROUNDED CORNERS.

1 UNIT PAVER/CONCRETE ACCENT STRIP

Scale: 1"= 1'-0"

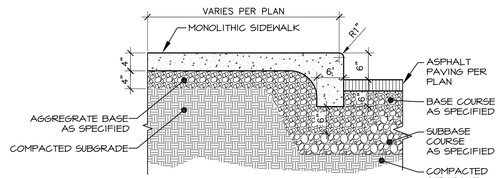

4 INTEGRAL CURB AND SIDEWALK

Scale: 3/4"= 1'-0"

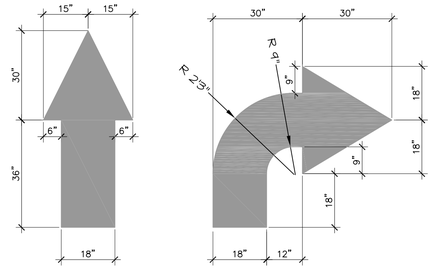

NOTES:

1. PAINT TRAFFIC LINES SOLID WHITE.
2. REFER TO SITE PLAN FOR LOCATION AND DIRECTION.
3. SEE SPECIFICATIONS FOR ADDITONAL INFORMATION

8 PAINTED ARROWS

Scale: 1/2"= 1'-0"

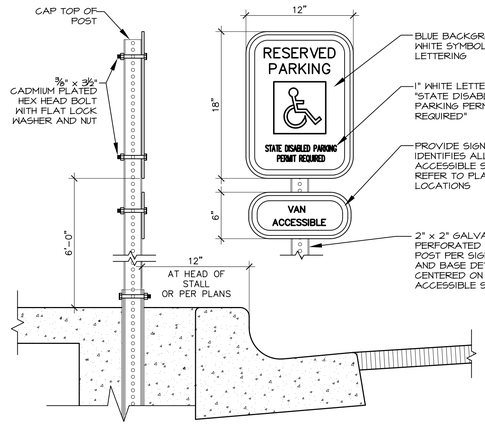

12 ACCESSIBLE PARKING SIGN

Scale: 1-1/2"= 1'-0"

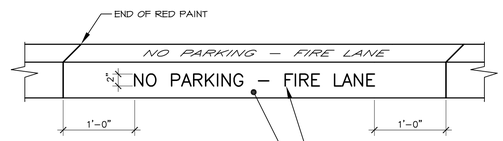

NOTE:

1. VERIFY LOCATION PRIOR TO INSTALLATION.
2. SEE SPECIFICATIONS FOR ADDITIONAL INFORMATION.

9 PAINTED CURB DETAIL FIRE ZONE

SCALE: 1"=1'- 0"

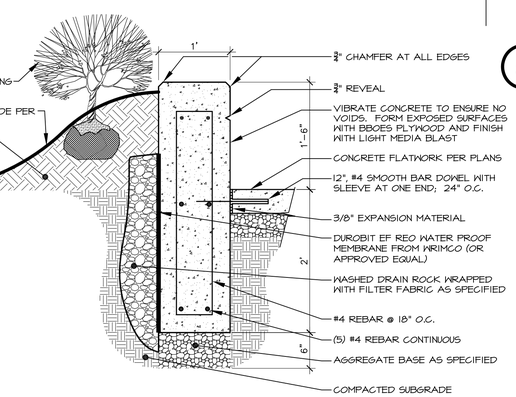

2 CONCRETE SEATWALL

Scale: 1"= 1'-0"

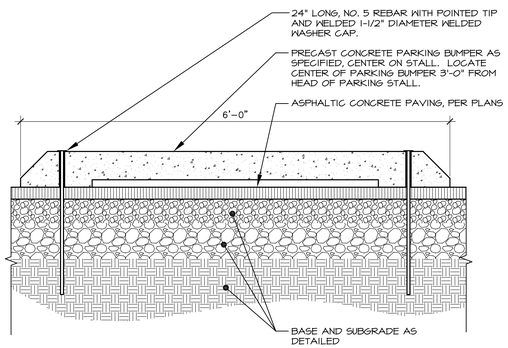

5 CONCRETE PARKING BUMPER

Scale: 1"= 1'-0"

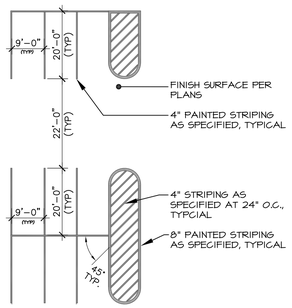

NOTE:

1. REFER TO LAYOUT PLAN FOR SPECIFIC STALL LOCATIONS AND DIMENSIONS.
2. DIMENSIONS ON THE PLANS SHALL SUPERCEDE THOSE OF THE DETAIL

10 PARKING LOT STRIPING

NOT TO SCALE

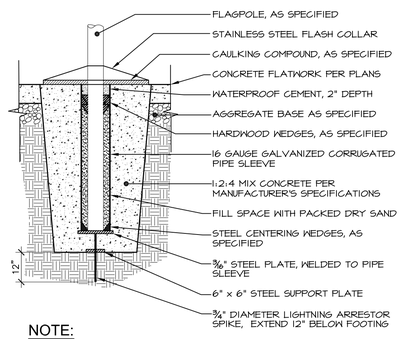

NOTE:

1. INSTALL PER MANUFACTURER'S RECOMMENDATIONS.

13 FLAGPOLE

NOT TO SCALE

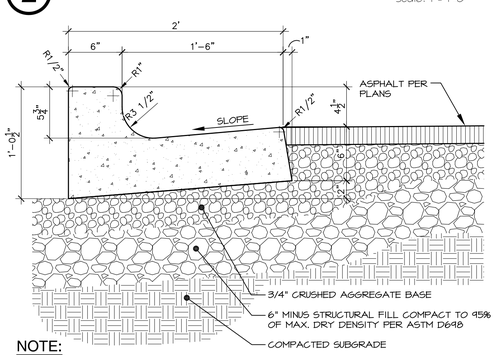

NOTE:

1. SEE I.S.P.W.C, SD-101 FOR ADDITIONAL INFORMATION UNLESS SITE SPECIFIC.

3 24" WIDE CONCRETE CURB & GUTTER

Scale: 1-1/2"= 1'-0"

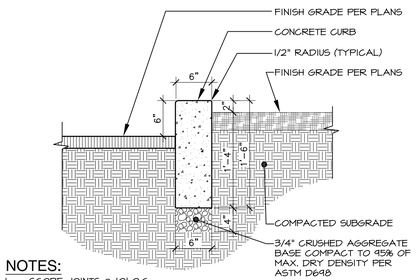

NOTES:

1. SCORE JOINTS @ 10' O.C.
2. EXPANSION JOINTS @ 40' O.C.
3. PROVIDE EXPANSION JOINTS AT THE INTERSECTION OF STRAIGHT CURB & RADII.
4. EXPANSION JOINTS SHALL BE PREFORMED JOINT FILLER OF 3/8" THICKNESS.
5. SCORE JOINTS SHALL BE MINIMUM 1/8" WIDE, 1-1/2" DEEP, AND ROUNDED CORNERS.

6 VERTICAL CURB

Scale: 1"= 1'-0"

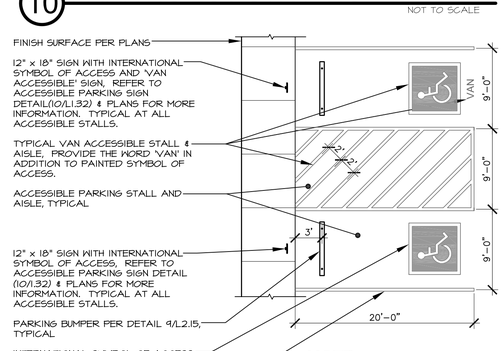

NOTE:

1. REFER TO LAYOUT PLAN FOR SPECIFIC STALL LOCATIONS AND DIMENSIONS.
2. DIMENSIONS ON THE PLANS SHALL SUPERCEDE THOSE OF THE DETAIL

FINISH SURFACE PER PLANS

12" x 18" SIGN WITH INTERNATIONAL SYMBOL OF ACCESS AND VAN ACCESSIBLE' SIGN, REFER TO ACCESSIBLE PARKING SIGN DETAIL(10/L1.32) & PLANS FOR MORE INFORMATION. TYPICAL AT ALL ACCESSIBLE STALLS.

TYPICAL VAN ACCESSIBLE STALL & AISLE, PROVIDE THE WORD 'VAN' IN ADDITION TO PAINTED SYMBOL OF ACCESS.

ACCESSIBLE PARKING STALL AND AISLE, TYPICAL

12" x 18" SIGN WITH INTERNATIONAL SYMBOL OF ACCESS, REFER TO ACCESSIBLE PARKING SIGN DETAIL (10/L1.32) & PLANS FOR MORE INFORMATION. TYPICAL AT ALL ACCESSIBLE STALLS.

PARKING BUMPER PER DETAIL 9/L2.15, TYPICAL

INTERNATIONAL SYMBOL OF ACCESS PAINTED ON PAVING, SYMBOL AND BORDER SHALL BE WHITE, INSIDE BORDER SHALL BE BLUE, AND AISLES SHALL BE WHITE

STALL STRIPING AS SPECIFIED, TYPICAL

11 ACCESSIBLE PARKING STALL LAYOUT

Scale: 1/8"= 1'-0"

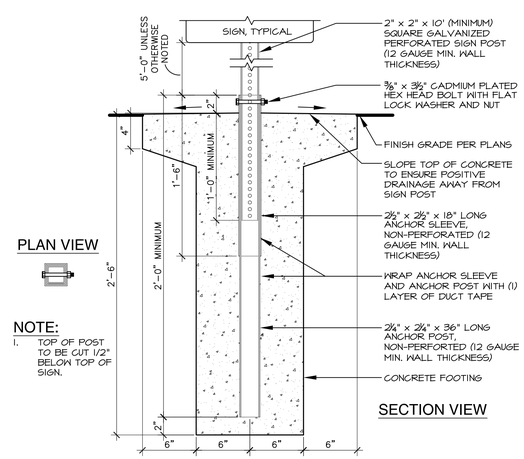

PLAN VIEW

NOTE:

1. TOP OF POST TO BE CUT 1/2" BELOW TOP OF SIGN.

SECTION VIEW

14 SIGN POST AND FOOTING

Scale: 1-1/2"= 1'-0"

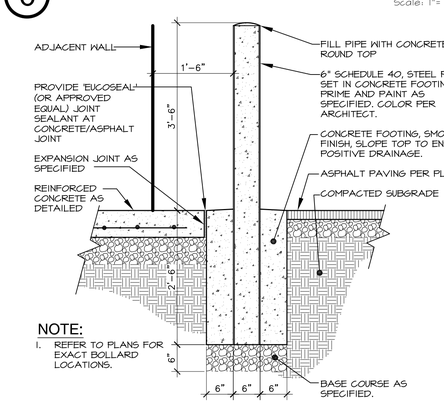

NOTE:

1. REFER TO PLANS FOR EXACT BOLLARD LOCATIONS.

7 STEEL BOLLARD

Scale: 3/4"= 1'-0"

Know what's below. Call before you dig.

CALL 2 BUSINESS DAYS IN ADVANCE BEFORE YOU DIG, GRADE, OR EXCAVATE FOR THE MARKING OF UNDERGROUND MEMBER UTILITIES

ARCHITECT:

COLE ARCHITECTS

COLE ARCHITECTS | 802 W. BANNOCK SUIT 208
Boise, ID 83702 | (208) 345-1800

TCA architecture • planning

TCA | 6211 Roosevelt Way NE
Seattle, WA 98115 | (206) 522-3820

STAMP:

STATE OF IDAHO — JOHN S. BRECKON — LICENSED LANDSCAPE ARCHITECT

NOT FOR CONSTRUCTION

CONSULTANT:

BRECKON landdesign

• Landscape Architecture
• Erosion & Sediment Control
• Geographic Info Systems
• Graphic Communication
• Water Management
• Irrigation Design
• Land Planning

www.breckonlanddesign.com
Fax: 208-376-6528
Phone: 208-376-5153
181 East 50th Street
Garden City, Idaho 83714

PROJECT INFORMATION:

BOISE CITY OF TREES

BOISE FIRE — DEDICATION — 1890 — 1891

City of Boise Fire Station 4

8485 W. Ustick Rd. Boise, ID 83704

REVISIONS:

MARK	DATE	DESCRIPTION

PROJECT PHASE	Project Status
PROJECT NUMBER	15043
PROJECT MANAGER	R. TeBeau
PROJECT ARCHITECT	R. TeBeau
DESIGN	JB
DRAWN BY	JB, LP, JR

SHEET NAME:

LAYOUT AND MATERIALS DETAILS

SHEET NUMBER:

C1.36

1.29.16

S:_projects\2015\15043 boise fire #4\CAD\15043 130 im04.dwg plotted by: user01 on Mon, February 1 2016 at 05:27 PM

CITY OF BOISE UTILITY NOTES

1. ALL WORK SHALL BE DONE IN ACCORDANCE WITH THE LATEST SEWER SPECIFICATIONS AND STANDARD DRAWINGS OF THE IDAHO STANDARDS FOR PUBLIC WORKS CONSTRUCTION (ISPWC), BOISE CITY PUBLIC WORKS DEPARTMENT AND/OR THE ADA COUNTY HIGHWAY DISTRICT (ACHD) MODIFICATIONS TO THE ISPWC.
2. THE CONTRACTOR SHALL CONSTRUCT THE SANITARY SEWER IN ACCORDANCE WITH THE STAMPED PLANS APPROVED BY THE BOISE CITY PUBLIC WORKS DEPARTMENT. THESE PLANS WILL BE PROVIDED TO THE CONTRACTOR BY THE PROJECT INSPECTOR PRIOR TO CONSTRUCTION. WORK SHALL NOT BE DONE WITHOUT THE CURRENT SET OF APPROVED PLANS.
3. FINAL APPROVAL AND ACCEPTANCE OF ALL SEWER CONSTRUCTION WILL BE BY THE BOISE CITY PUBLIC WORKS DEPARTMENT.
4. SEWER INSPECTIONS WILL BE BY THE BOISE CITY PUBLIC WORKS DEPARTMENT AND THEIR DECISIONS SHOULD BE CONSIDERED AS FINAL. THE CONTRACTOR WILL NOTIFY THE CITY PUBLIC WORKS DEPARTMENT 48 HOURS PRIOR TO CONSTRUCTION. BOISE CITY WILL PROVIDE PERIODIC INSPECTIONS FOR AN EIGHT-HOUR DAY, FROM 8:00 A.M. TO 5:00 P.M., FOR A FORTY HOUR WEEK. THE CONTRACTOR SHALL REIMBURSE THE CITY AT RATES ESTABLISHED BY THE CITY FOR INSPECTION IN EXCESS OF THE NORMAL WORK WEEK, INCLUDING LEGAL HOLIDAYS. OVERTIME INSPECTION RATES AND A LIST OF LEGAL HOLIDAYS CAN BE OBTAINED FROM THE BOISE CITY PUBLIC WORKS DEPARTMENT.
5. SEWER CONSTRUCTION WILL MEET SPECIFIC DETAILS AND REQUIREMENTS OF THE FOLLOWING IDAHO STANDARDS FOR PUBLIC WORKS CONSTRUCTION.
   A. STANDARD MANHOLE - TYPE A; DRAWING NO. SD-501.
   B. STANDARD SHALLOW MANHOLE; DRAWING NO. SD-505.
   C. MANHOLE COVER & FRAME; DRAWING NO. SD-507.
   D. MANHOLE COLLAR DETAIL; DRAWING NO. SD-508.
   E. STANDARD SEWER SERVICE LINE; DRAWING NO. SD-511-A.
   F. SEWER SERVICE MARKER; DRAWING NO. SD-512.
6. GROUNDWATER LEVELS SHALL BE MAINTAINED BELOW THE BOTTOM OF THE TRENCH DURING THE PIPE LAYING AND PIPE JOINING OPERATIONS. ALL MANHOLES LOCATED WITHIN LIMITS OF SEASONAL GROUNDWATER SHALL HAVE THE EXTERIOR OF ALL CONCRETE SURFACES COATED WITH TWO COATS OF COAL TAR EPOXY.
7. THE CONTRACTOR SHALL INSTALL A REMOVABLE PLUG UPSTREAM OF SSMH BETWEEN SSMH_____ AND SSMH . THIS PLUG SHALL REMAIN IN PLACE DURING CONSTRUCTION UNTIL FINAL ACCEPTANCE OF THIS SEWER PROJECT.
8. SERVICE LINES SHALL BE MARKED IN ACCORDANCE WITH THE SPECIFICATIONS AND STANDARD DRAWING SD 512. SERVICE LINE MARKERS SHALL REMAIN IN PLACE DURING CONSTRUCTION AND BE PRESENT FOR FINAL INSPECTION. ON LOTS WHERE ROOF DRAINS ARE UTILIZED, THE CONTRACTOR SHALL COLOR THE ROOF DRAIN MARKERS TO CLEARLY DIFFERENTIATE ROOF DRAIN MARKERS FROM SEWER SERVICE MARKERS.
9. THE HORIZONTAL SEPARATION OF THE WATER AND SEWER MAINS SHALL BE A MINIMUM OF TEN (10) FEET. WHERE IT IS NECESSARY FOR SEWER AND WATER TO CROSS EACH OTHER AND THE SEWER LINE IS LESS THAN 18 INCHES BELOW OR ABOVE THE WATER MAIN, THE SEWER LINE CROSSING SHALL BE P.V.C. PRESSURE PIPE CONFORMING TO AWWA C-900 OR ASTM D2241, FOR A DISTANCE OF 10' ON BOTH SIDES OF WATER LINE. ONE FULL LENGTH OF BOTH WATER MAIN AND SEWER LINE SHALL BE CENTERED OVER THE CROSSING POINT SO THAT ALL JOINTS WILL BE AS FAR FROM THE CROSSING AS POSSIBLE.
10. THE CONTRACTOR SHALL PROVIDE BOISE CITY'S INSPECTOR WITH "CUT SHEETS" FOR THE STAKING PROVIDED FOR CONSTRUCTION OF THE SANITARY SEWER. "CUT SHEETS" SHALL BE PROVIDED TO THE CITY PRIOR TO CONSTRUCTION. ADDITIONALLY, TEMPORARY BENCH MARKS MUST BE PROVIDED TO THE BOISE CITY DEPARTMENT OF PUBLIC WORKS, INSPECTION SECTION; PRIOR TO THE COMMENCEMENT OF CONSTRUCTION.
11. PRIOR TO CONSTRUCTION, TEMPORARY BENCH MARKS (TBMS) SHALL BE SET IN THE FIELD BY A LICENSED SURVEYOR OR ENGINEER AND SHALL BE FLAGGED AND CLEARLY VISIBLE FROM ALL DIRECTIONS. A TBM SHALL BE LOCATED WITHIN 100 FEET OF THE TIE-IN TO EXISTING SEWER AND SPACED NO GREATER THAN 500 FEET ALONG THE SEWER ALIGNMENT THEREAFTER. TBMS SHALL HAVE ELEVATIONS TIED TO THE NAVD 1988 DATUM.
12. SEWER PIPE WITH COVER OF GREATER THAN 3 FEET, SHALL BE BELL AND SPIGOT, POLYVINYL CHLORIDE (PVC), SDR35, ASTM D-3034 FOR 4-INCH THROUGH 15-INCH AND ASTM F679 FOR 18-INCH THROUGH 27-INCH AS SET FORTH BY THE BOISE CITY PUBLIC WORKS DEPARTMENT. SEWER PIPE WITH LESS THAN 3 FEET OF COVER SHALL BE DUCTILE IRON CONFORMING TO ANSI A-21.51 OR AWWA C-151 MINIMUM CLASS 50. A RUBBER RING IS TO BE INSTALLED WHERE THE PIPE IS IN CONTACT WITH THE MANHOLE BASE AND/OR ITS CHANNEL IN ORDER TO ENSURE A WATER-TIGHT SEAL.
13. THE SEWER CONTRACTOR SHALL SUPPLY ALL LID ASSEMBLIES AND THE REQUIRED NUMBER OF RISER AND GRADE RINGS. THE SEWER CONTRACTOR SHALL FIELD VERIFY THE ELEVATION OF THE TOP OF THE MANHOLE CONE TO ASSURE THAT RING ELEVATIONS MATCH FINAL STREET GRADES. THE MAXIMUM HEIGHT OF THE GRADE RINGS SHALL BE SUCH THAT THE FINISHED GRADE ELEVATION OF THE MANHOLE FRAME AND COVER SHALL NOT BE MORE THAN TWENTY-ONE (21") INCHES ABOVE THE TOP OF THE MANHOLE CONE.
14. THE PAVING CONTRACTOR SHALL SET THE GRADE RINGS AND POUR THE CONCRETE COLLARS PER STANDARD DRAWING NO. SD 508. THE PAVING CONTRACTOR SHALL CONTACT ACHD 24 HOURS PRIOR TO POURING CONCRETE COLLARS.
15. THE TRENCH BACKFILL ABOVE THE PIPE ZONE WILL BE INSPECTED BY THE ACHD OR BY THE DEVELOPER'S ENGINEER IN ACCORDANCE WITH THE LATEST EDITION OF THE "CONSTRUCTION QUALITY ASSURANCE MANUAL". COMPACTION TESTS ARE REQUIRED ON THE BACKFILL ABOVE THE PIPE ZONE, WITHIN PUBLIC RIGHT-OF-WAY. TESTING SHALL BE CONDUCTED TO MEET ALL ACHD REQUIREMENTS AND THE RESULTS SHALL BE SUBMITTED TO BOISE CITY PUBLIC WORKS DEPARTMENT AND ACHD PRIOR TO FINAL ACCEPTANCE.
16. THE BOISE PUBLIC WORKS DEPARTMENT MAY TEST THE COMPACTION OF THE SEWER PIPELINE BEDDING. TESTING WILL BE DONE BY AN INDEPENDENT TESTING LABORATORY. THE COST OF THE FIRST TEST WILL BE PAID BY THE BOISE PUBLIC WORKS DEPARTMENT. IF THE FIRST TEST FAILS TO MEET REQUIRED COMPACTION, ALL RE-TESTING SHALL BE PAID BY THE SEWER CONTRACTOR. THE CONTRACTOR SHALL CONTACT THE BOISE PUBLIC WORKS DEPARTMENT AND/OR TESTING LABORATORY TO SCHEDULE THE TESTS PRIOR TO ANY PIPE LAYING AND BACKFILLING.
17. THE CONTRACTOR SHALL LEAVE THE EXCAVATION FOR THE UPSTREAM END OF ALL SERVICE LINES OPEN FOR FIELD VERIFICATION OF THE INVERT ELEVATION BY THE CITY'S INSPECTOR. THE CONTRACTOR SHALL NOT BACKFILL THE ENDS OF SERVICE LINES UNTIL HE HAS OBTAINED APPROVAL FROM BOISE CITY'S INSPECTOR OR MADE OTHER ARRANGEMENTS FOR THE VERIFICATION OF SERVICE LINE INVERT ELEVATIONS.
18. PRIOR TO FINAL ACCEPTANCE, AFTER ALL UTILITIES ARE IN AND PRIOR TO PAVING, AN AIR TEST SHALL BE CONDUCTED. THE CONTRACTOR SHALL CONTACT THE CITY OF BOISE A MINIMUM OF 24 HOURS PRIOR TO TESTING. ALL MANHOLES SHALL BE TESTED IN ACCORDANCE WITH THE ISPWC AND BOISE CITY'S MODIFICATIONS.

GENERAL NOTES:

1. TRENCHING SHALL COMPLY WITH DIVISION 300 OF THE ISPWC.
2. POLYETHYLENE (PE) PRESSURE PIPE SHALL BE PRESSURE CLASS 200 PSI WITH DR17 MEETING ANSI/AWWA C901.
3. WATER SYSTEM CONSTRUCTION SHALL COMPLY WITH DIVISION 400 OF THE ISPWC.
4. SEWER SERVICE PIPE SHALL BE SDR 35 SOLID WALL PVC PIPE MEETING ASTM D3034.
5. CONTRACTOR SHALL PROVIDE BRECKON LAND DESIGN WITH THE FOLLOWING SUBMITTALS PRIOR TO CONSTRUCTION.
   5.1. SEWER SERVICE TAP/SADDLE MANUFACTURER
   5.2. SEWER SERVICE PIPE MANUFACTURER
   5.3. TRENCH PATCH ASPHALT GRADATION
   5.4. TRENCH PATCH 3/4" CRUSHED AGGREGATE GRADATION
   5.5. VISUAL OR VIDEO INSPECTION REPORTS OF EXISTING SEWER MAIN.
   5.6. COMPACTION TEST RESULTS FOR ROADWAY PATCH.
6. ELEVATIONS SPECIFIED IN POTABLE WATER CROSSING TABLE ARE GUIDANCE FOR THE CONTRACTOR TO MEET SEPARATION DISTANCE REQUIREMENTS. CONTRACTOR CAN SUBMIT A MORE COST EFFECTIVE MEANS AND METHODS TO BRECKON LAND DESIGN FOR APPROVAL PRIOR TO CONSTRUCTION.
7. CONTRACTOR SHALL OBTAIN A SEWER TAP PERMIT FROM THE CITY OF BOISE PUBLIC WORKS FOR EACH NEW SEWER SERVICE TAP.
8. THRUST BLOCKS SHALL BE CONSTRUCTION TO MEET ISPWC SD-403.

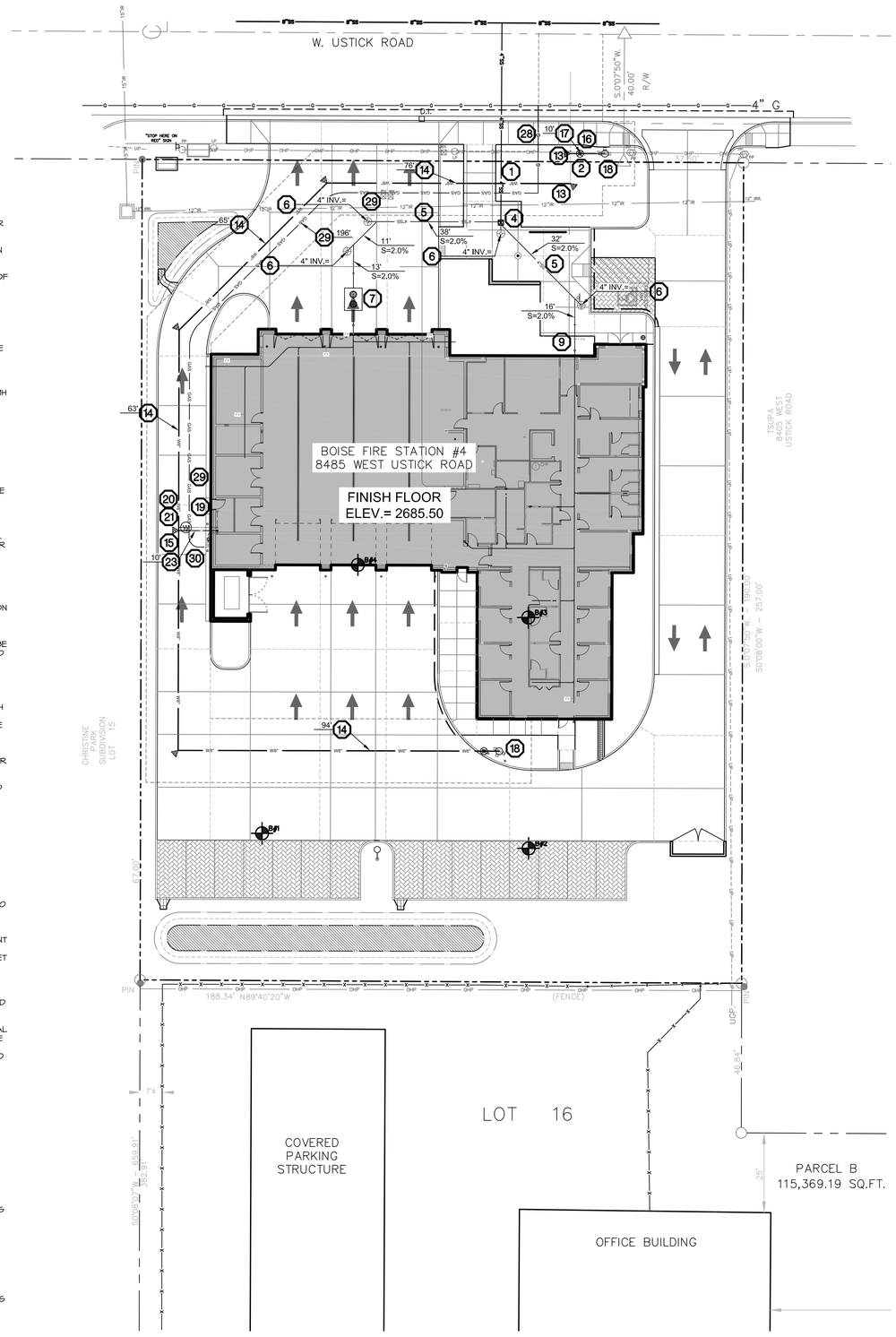

1 UTILITY PLAN
SCALE: 1" = 20' - 0"

NORTH

0 10' 20' 40'

LEGEND

- CENTERLINE
- PROPERTY LINE
- EXISTING SANITARY SEWER MAIN
- EXISTING DOMESTIC WATER MAIN
- EXISTING GAS LINE
- EXISTING UNDERGROUND POWER LINE
- PROPOSED 4" SANITARY SEWER SERVICE LINE
- PROPOSED 6" SANITARY SEWER SERVICE LINE
- PROPOSED WATER MAIN
- PROPOSED FIRE HYDRANT LATERAL
- PROPOSED FIRE SERVICE LINE
- PROPOSED DOMESTIC WATER SERVICE LINE
- PROPOSED DOMESTIC GAS SERVICE LINE
- PROPOSED DOMESTIC POWER SERVICE LINE
- PROPOSED DOMESTIC WATER METER
- PROPOSED SANITARY SEWER SERVICE CLEAN OUT
- PROPOSED SANITARY SEWER GREASE INTERCEPTOR, SEE MECHANICAL PLANS
- PROPOSED FIRE HYDRANT
- PROPOSED THRUST BLOCK
- PROPOSED WATER VALVE

KEYNOTES:

1. RETAIN AND PROTECT EXISTING 4" SANITARY SEWER SERVICE.
2. RETAIN AN PROTECT EXISTING WATER MAIN.
3. EXCAVATION LIMITS FOR UTILITIES TRENCH. REPAIR AND REPLACE ALL DISTURBED AREAS TO PRE CONSTRUCTION CONDITIONS.
4. CONNECT TO EXISTING 4" SANITARY SEWER SERVICE. COORDINATE CONNECTION WITH BOISE CITY PUBLIC WORKS DEPARTMENT. FIELD VERIFY INVERT PRIOR TO CONSTRUCTION. INSTALL CLEANOUT TO GRADE PER DETAIL 3 ON SHEET CU 1.45. (1) 45° BEND
5. INSTALL 4" SANITARY SEWER SERVICE PER ISPWC SD-511 AND BOISE CITY PUBLIC WORKS DEPARTMENT. SEWER SERVICE MUST BE INSTALLED WITH A MINIMUM OF 2% SLOPE. SEE DETAIL 2 ON SHEET CU 1.45.
6. INSTALL CLEANOUT TO GRADE. (1) 90° BEND
7. INSTALL 1500 GALLON GREASE INTERCEPTOR BY AMCOR OR APPROVED EQUAL. SEE MECHANICAL PLAN FOR DETAILS.
8. INSTALL SANITARY SEWER SERVICE JUNCTION CLEANOUT TO GRADE. SEE DETAIL 3 ON SHEET CU 1.45.
9. INSTALL SANITARY SEWER SERVICE CONNECTION TO BUILDING. COORDINATE WITH PLUMBING CONTRACTOR REGARDING LOCATION AND INVERT PRIOR TO CONSTRUCTION.
10. INSTALL SANITARY SEWER SERVICE JUNCTION AND CLEANOUT TO GRADE (2) 90° BENDS
11. INSTALL CLEANOUT TO GRADE (1) 45° BEND
12. NON POTABLE AND POTABLE LINE CROSSING. SEE DETAIL 4 ON SHEET CU 1.45.
13. WATER MAIN CONNECTION BY CAPITOL WATER. (1) 8" GATE VALVE (M.JxM.J).
14. 8" C900 WATER MAIN PIPE BY CAPITOL WATER.
15. INSTALL FIRE SERVICE CONNECTION TO BUILDING. COORDINATE WITH FIRE SPRINKLER CONTRACTOR. CONNECTION REQUIRES EXTERIOR WALL MOUNTED POST INDICATOR VALVE. SEE MECHANICAL PLAN DETAILS.
16. INSTALL HYDRANT LATERAL CONNECTION. (1) 8"x8"x6" TEE (M.JxM.JxFLG) (1) 6" GATE VALVE (FLGxM.J)
17. INSTALL 6" C900 HYDRANT LATERAL.
18. INSTALL FIRE HYDRANT ASSEMBLY PER ISPWC SD-404 WITH THRUST BLOCK. (1) 6" GATE VALVE (FLGxM.J).
19. INSTALL 2" POLYETHYLENE DOMESTIC WATER SERVICE LINE TAP CONNECTION.
20. INSTALL 2" POLYETHYLENE DOMESTIC WATER SERVICE LINE.
21. 1.5" DOMESTIC WATER METER INSTALLED BY CAPITOL WATER. SEE DETAIL 1 ON SHEET CU 1.45.
22. INSTALL FIRE SERVICE LINE CONNECTION. (1) 8"x8"x6" TEE (M.JxM.JxFLG)
23. INSTALL 6" C900 FIRE SERVICE LINE PER DETAIL 2 ON SHEET CU 1.45.
24. INSTALL 2" POLYETHYLENE PIPE JUNCTION TEE WITH FORD COUPLING OR APPROVED EQUAL.
25. INSTALL 2" DOMESTIC WATER SERVICE CONNECTION TO BUILDING. COORDINATE WITH PLUMBING CONTRACTOR.
26. INSTALL 6" FIRE SERVICE JUNCTION. (1) 6" TEE (M.JxM.JxFLG) (1) 6" GATE VALVE (FLGxM.J) (1) THRUST BLOCK
27. 6" FIRE SERVICE BEND (1) 90° BEND (1) THRUST BLOCK
28. GAS SERVICE CONNECTION TO MAIN. COORDINATE WITH INTERMOUNTAIN GAS CO.
29. GAS SERVICE LINE. COORDINATE WITH INTERMOUNTAIN GAS CO.
30. GAS SERVICE CONNECTION TO BUILDING. COORDINATE WITH INTERMOUNTAIN GAS CO. AND MECHANICAL.

811 Know what's below. Call before you dig.
CALL 2 BUSINESS DAYS IN ADVANCE BEFORE YOU DIG, GRADE, OR EXCAVATE FOR THE MARKING OF UNDERGROUND MEMBER UTILITIES

ARCHITECT:
COLE ARCHITECTS
COLE ARCHITECTS | 802 W. BANNOCK SUIT 208
Boise, ID 83702 | (208) 345-1800
TCA architecture • planning
TCA | 6211 Roosevelt Way NE
Seattle, WA 98115 | (206) 522-3820

STAMP:
PROFESSIONAL ENGINEER REGISTERED STATE OF IDAHO DANIEL A. THOMPSON
NOT FOR CONSTRUCTION

CONSULTANT:
BRECKON landdesign
• Landscape Architecture
• Erosion & Sediment Control
• Geographic Info Systems
• Graphic Communication
• Water Management
• Irrigation Design
• Land Planning
www.breckonlanddesign.com
Fax: 208-376-6528
Phone: 208-376-5153
181 East 50th Street
Garden City, Idaho 83714

PROJECT INFORMATION:
BOISE CITY OF TREES
BOISE FIRE Est. 1891 DEDICATION

City of Boise Fire Station 4
8485 W. Ustick Rd. Boise, ID 83704

REVISIONS:

MARK	DATE	DESCRIPTION

PROJECT PHASE	Project Status
PROJECT NUMBER	15043
PROJECT MANAGER	R. TeBeau
PROJECT ARCHITECT	R. TeBeau
DESIGN	DT
DRAWN BY	JB, LP, JR, BS

SHEET NAME:
UTILITIES PLAN

SHEET NUMBER:
C1.40

1.29.16

S:_projects\2015\15043 boise fire #4\CAD\15043 140 util04.dwg plotted by: user01 on Mon, February 1 2016 at 05:32 PM

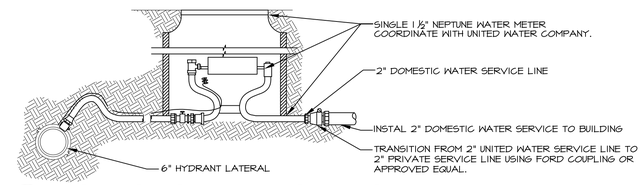

1 DOMESTIC WATER SERVICE CONNECTION

N.T.S.

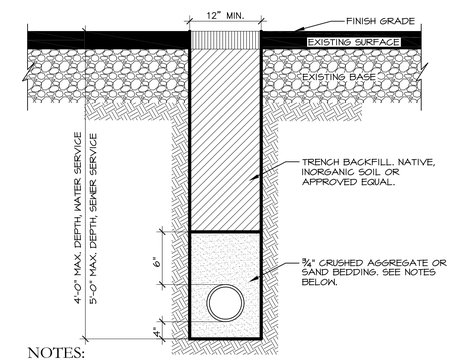

NOTES:

1. BACKFILL SHALL BE COMPACTED TO A MINIMUM OF 95% OF AASHTO T-99.
2. TRENCH SHALL CONFORM TO O.S.H.A. REQUIREMENTS.
3. FOUNDATION STABILIZATION IS REQUIRED WHERE BOTTOM OF TRENCH IS SOFT OR UNSTABLE.
4. 3/4" CRUSHED AGGREGATE SHALL MEET THE FOLLOWING GRADATION:
   - 4.1. 100% PASSING THE 1" SIEVE SIZE
   - 4.2. 80% - 100% PASSING THE 3/4" SIEVE SIZE
   - 4.3. 20% - 70% PASSING THE 3/8" SIEVE SIZE
   - 4.4. 5% - 20% PASSING THE No. 4 SIEVE SIZE
   - 4.5. 0% - 3% PASSING THE No. 200 SIEVE SIZE
5. SAND BEDDING SHALL HAVE 100% PASSING THE No. 4 SIEVE SIZE AND LESS THAN 3% PASSING THE No. 200 SIEVE.

2 PRIVATE SERVICE LINE TRENCH SECTION

NOT TO SCALE

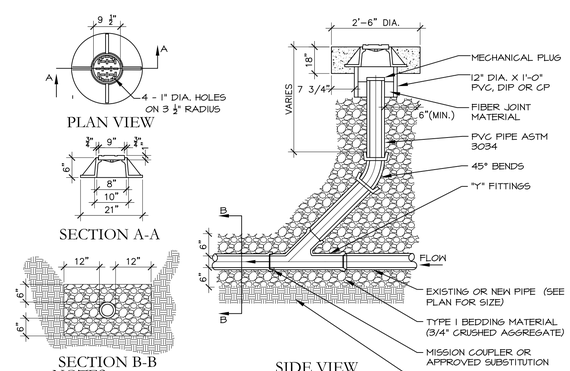

NOTES:

1. SEE ISPWC STANDARD DRAWING SD-506A FOR ADDITIONAL INFORMATION.

3 CLEAN OUT

N.T.S.

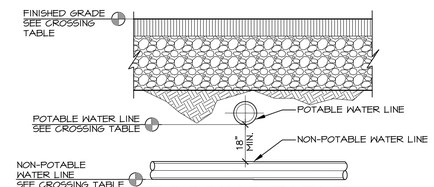

CROSSING TABLE

KEYNOTE NO.	FINISHED GRADE	POTABLE INV.	NON-POT. INV.
13	43.85	38.85	35.53
14	43.81	34.31	36.81
15	43.50	34.00	36.50

NOTES:

1. IF NON-POTABLE WATER LINE MUST BE INSTALLED WITHIN 18" OF POTABLE WATER LINE, THEN ON FULL UNCUT LENGTH OF NON-POTABLE PIPE MUST BE CENTERED ON THE CROSSING AND THE NON-POTABLE LINE MUST BE SLEEVED WITH A LARGER DIAMETER PIPE FOR 10' BEYOND BOTH SIDES OF THE CROSSING.

4 POTABLE LINE SEPARATION

NOT TO SCALE

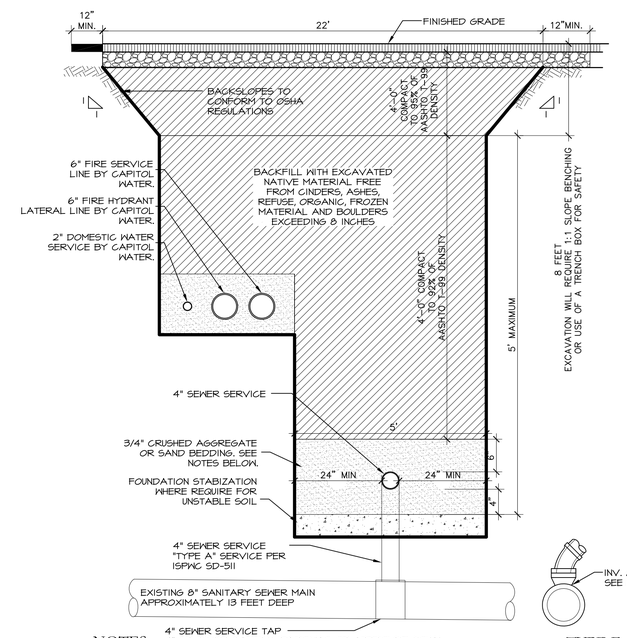

NOTES:

1. TRENCH SHALL CONFORM TO O.S.H.A. REQUIREMENTS.
2. 3/4" CRUSHED AGGREGATE SHALL MEET THE FOLLOWING GRADATION:
   - 2.1. 100% PASSING THE 1" SIEVE SIZE
   - 2.2. 80% - 100% PASSING THE 3/4" SIEVE SIZE
   - 2.3. 20% - 70% PASSING THE 3/8" SIEVE SIZE
   - 2.4. 5% - 20% PASSING THE No. 4 SIEVE SIZE
   - 2.5. 0% - 3% PASSING THE No. 200 SIEVE SIZE
3. SAND BEDDING SHALL HAVE 100% PASSING THE No. 4 SIEVE SIZE AND LESS THAN 3% PASSING THE No. 200 SIEVE.
4. SURFACE RESTORATION SHALL BE TYPE "P" MEETING THE ISPWC DIVISION 300 SECTION 3.8.

5 PUBLIC TRENCH SECTION

NOT TO SCALE

Know what's below. Call before you dig.

CALL 2 BUSINESS DAYS IN ADVANCE BEFORE YOU DIG, GRADE, OR EXCAVATE FOR THE MARKING OF UNDERGROUND MEMBER UTILITIES

ARCHITECT:

COLE ARCHITECTS

COLE ARCHITECTS | 802 W. BANNOCK SUIT 208
Boise, ID 83702 | (208) 345-1800

TCA architecture • planning

TCA | 6211 Roosevelt Way NE
Seattle, WA 98115 | (206) 522-3820

STAMP:

PROFESSIONAL ENGINEER REGISTERED STATE OF IDAHO DANIEL A. THOMPSON

NOT FOR CONSTRUCTION

CONSULTANT:

BRECKON landdesign

- Landscape Architecture
- Erosion & Sediment Control
- Geographic Info Systems
- Graphic Communication
- Water Management
- Irrigation Design
- Land Planning

www.breckonlanddesign.com
Fax: 208-376-6528
Phone: 208-376-5153
181 East 50th Street
Garden City, Idaho 83714

PROJECT INFORMATION:

BOISE CITY OF TREES

BOISE FIRE EST. 1891 DEDICATION

City of Boise Fire Station 4

8485 W. Ustick Rd. Boise, ID 83704

REVISIONS:

MARK	DATE	DESCRIPTION

PROJECT PHASE	Project Status
PROJECT NUMBER	15043
PROJECT MANAGER	R. TeBeau
PROJECT ARCHITECT	R. TeBeau
DESIGN	DT
DRAWN BY	JB, LP, JR, BS

SHEET NAME:

UTILITY DETAILS

SHEET NUMBER:

C1.45

1.29.16

S:_projects\2015\15043 boise fire #4\CAD\15043 140 util04.dwg plotted by: user01 on Mon, February 1 2016 at 06:33 PM

CONSTRUCTION NOTES

1. ALL WORK SHALL BE DONE IN ACCORDANCE WITH THE SPECIFICATIONS AND/OR REQUIREMENTS OF THE CITY PUBLIC WORKS DEPARTMENT, AND/OR THE COUNTY HIGHWAY DISTRICT.
2. ALL CONTRACTORS WORKING WITHIN THE PROJECT BOUNDARIES ARE RESPONSIBLE FOR COMPLIANCE WITH ALL APPLICABLE SAFETY LAWS OF ANY JURISDICTIONAL BODY. THE CONTRACTOR SHALL BE RESPONSIBLE FOR ALL BARRICADES, SAFETY DEVICES, AND CONTROL OF TRAFFIC WITHIN AND AROUND THE CONSTRUCTION AREA.
3. ALL WORK AND MATERIALS SHALL CONFORM TO THE 2010 EDITION OF THE I.S.P.W.C., AND THE APPROPRIATE LOCAL AGENCIES.
4. THE CONTRACTOR SHALL OBTAIN THE APPROPRIATE PERMITS FROM ALL GOVERNMENT/LOCAL AGENCIES PRIOR TO STARTING CONSTRUCTION.
5. ALL CONSTRUCTION IN THE RIGHT-OF-WAY SHALL CONFORM TO THE 2010 EDITION OF THE I.S.P.W.C. AND THE ADA COUNTY HIGHWAY DISTRICT SUPPLEMENTAL SPECIFICATIONS. NO EXCEPTIONS TO SPECIFICATIONS OR THE I.S.P.W.C. WILL BE ALLOWED UNLESS SPECIFICALLY AND PREVIOUSLY APPROVED IN WRITING BY THE ENFORCING AGENCY.
6. ALL CONTRACTORS WORKING WITHIN THE PUBLIC RIGHT-OF-WAY ARE REQUIRED TO SECURE A RIGHT-OF-WAY CONSTRUCTION PERMIT FROM A.C.H.D. AT LEAST 24 HOURS PRIOR TO ANY CONSTRUCTION.
7. ANY CHANGE FROM THE PLANS SHALL BE APPROVED BY THE DESIGN PROFESSIONAL.
8. THE CONTRACTOR SHALL CONTACT DIGLINE 48 HOURS PRIOR TO ANY EXCAVATION. 1-800-342-1585.
2. THE LOCATIONS OF EXISTING UNDERGROUND UTILITIES ARE APPROXIMATE. THE CONTRACTOR SHALL DETERMINE THE EXACT LOCATION OF ALL EXISTING UTILITIES BEFORE COMMENCING WORK. THE CONTRACTOR ASSUMES ALL RESPONSIBILITY FOR ANY AND ALL DAMAGES CAUSED BY HIS FAILURE TO EXACTLY LOCATE AND PRESERVE ANY AND ALL UNDERGROUND UTILITIES.
3. THE CONTRACTOR SHALL TAKE ALL NECESSARY PRECAUTIONS TO PROTECT THE EXISTING UTILITIES AND IMPROVEMENTS. ANY DAMAGE TO EXISTING FACILITIES OR IMPROVEMENTS RESULTING FROM THE CONTRACTOR'S OPERATIONS, SHALL BE REPAIRED OR REPLACED AT THE CONTRACTOR'S EXPENSE.
4. IF THE OWNER/CONTRACTOR ELECTS TO IMPORT FILL MATERIALS, WASTE SOIL SHALL BE HAULED TO AN OFFSITE DISPOSAL SITE FURNISHED BY THE CONTRACTOR.
5. CONTRACTOR IS RESPONSIBLE FOR ALL CONSTRUCTION STAKING. STAKING SHALL BE PERFORMED BY A REGISTERED LAND SURVEYOR WITHIN THE STATE OF IDAHO.
6. CONTRACTOR SHALL PROVIDE SUBMITTALS FOR THE FOLLOWING PRIOR TO CONSTRUCTION:
   - A. 6" MINUS UNCRUSHED AGGREGATE BASE COURSE FOR PAVEMENT SECTION.
   - B. 3/4" MINUS CRUSHED AGGREGATE BASE COURSE FOR PAVEMENT SECTION.
   - C. ASPHALT PAVEMENT MIX DESIGN FOR PAVEMENT SECTION.
   - D. CONCRETE PAVEMENT MIX DESIGN FOR PAVEMENT SECTION.
   - E. CATCH BASIN INLETS
   - F. STORM DRAIN PIPING
   - G. FILTER FABRIC
   - H. 2" WASHED DRAIN ROCK AND ASTM C-33 FILTER SAND USED IN SEEPAGE BED
   - I. SUBGRADE COMPACTION TEST PROCEDURE
   - J. BASE COMPACTION TEST PROCEDURE
15. PROVIDE SUBGRADE AND BASE COURSE COMPACTION TEST RESULTS (DURING CONSTRUCTION) TO BRECKON LAND DESIGN. COMPACTION TESTING SHALL BE PERFORMED IN ACCORDANCE WITH ASTM D1557, 95%.
16. DURING THE COURSE OF THE WORK, THE CONTRACTOR SHALL COORDINATE AND ACCOMMODATE OTHER CONTRACTORS, OPERATIONS OF THE OWNER, AND LOCAL AGENCIES.
17. ALL MATERIAL FURNISHED ON OR FOR THE PROJECT MUST MEET THE MINIMUM REQUIREMENTS OF THE APPROVING AGENCIES OR AS SET FORTH HEREIN, WHICHEVER IS MORE RESTRICTIVE. CONTRACTORS MUST FURNISH PROOF THAT ALL MATERIALS INSTALLED ON THIS PROJECT MEET THE REQUIREMENTS OF STORM DRAIN NOTE #2 AT THE REQUEST OF THE APPROVING AGENCY AND/OR THE DESIGNER.
18. THE CONTRACTOR SHALL DETERMINE THE WORK SUBJECT TO APPROVAL BY ANY POLITICAL SUBDIVISION OR AGENCY MUST BE APPROVED PRIOR TO
   - A. BACKFILLING TRENCHES FOR PIPE;
   - B. PLACING OF AGGREGATE BASE;
   - C. PLACING OF CONCRETE;
   - D. PLACING OF ASPHALT PAVING.

   WORK DONE WITHOUT SUCH APPROVAL DOES NOT RELIEVE THE CONTRACTOR FROM THE RESPONSIBILITY OF PERFORMING THE WORK IN AN ACCEPTABLE MANNER.
19. ONLY PLAN SETS STAMPED "APPROVED FOR CONSTRUCTION" AND SIGNED BY THE CITY ENGINEER OR HIS AUTHORIZED REPRESENTATIVE SHALL BE USED BY THE PROJECT CONTRACTOR(S). USE OF ANY PLANS ON THE JOB WITHOUT THE "APPROVED FOR CONSTRUCTION" STAMP SHALL BE GROUNDS FOR THE ISSUANCE OF A STOP WORK ORDER.
20. THE CONTRACTOR SHALL KEEP ON SITE AT ALL TIMES, A COPY OF THE APPROVED CONSTRUCTION PLANS ON WHICH IS RECORDED THE ACTUAL LOCATIONS OF THE PROPOSED IMPROVEMENTS AND ANY OTHER UTILITIES ENCOUNTERED. THE CONTRACTOR SHALL PROVIDE THESE LOCATIONS TO THE DESIGNER FOR USE IN THE PRODUCTION OF RECORD DRAWINGS PRIOR TO FINAL APPROVAL OF THE IMPROVEMENTS.
21. THE DESIGN PROFESSIONAL SHALL SUBMIT RECORD DRAWINGS TO THE PUBLIC WORKS DEPARTMENT AS PRESCRIBED BEFORE FINAL APPROVAL IS GIVEN TO THE PROJECT.

TOPSOIL NOTES

1. TOPSOIL REQUIREMENTS: ASTM D 5268, PH RANGE OF 5.5 TO 7, FOUR PERCENT ORGANIC MATERIAL MINIMUM, FREE OF STONES 1/2 INCH OR LARGER IN ANY DIMENSION, AND OTHER EXTRANEOUS MATERIALS HARMFUL TO PLANT GROWTH.
2. TOPSOIL SOURCE: STRIP EXISTING TOPSOIL FROM ALL AREAS OF THE SITE TO BE DISTURBED. TOPSOIL SHALL BE FERTILE, FRIABLE, NATURAL LOAM, SURFACE SOIL, REASONABLY FREE OF SUBSOIL, CLAY LUMPS, BRUSH, WEEDS AND OTHER LITTER, AND FREE OF ROOTS, STUMPS, ORGANIC MATTER LARGER THAN 2 INCHES IN ANY DIMENSION, AND OTHER EXTRANEOUS OR TOXIC MATTER HARMFUL TO PLANT GROWTH. TOPSOIL SHALL BE SCREENED TO ACHIEVE THIS REQUIREMENT.
3. REPRESENTATIVE SAMPLES SHALL BE TESTED FOR ACIDITY, FERTILITY AND GENERAL TEXTURE BY A RECOGNIZED COMMERCIAL OR GOVERNMENT AGENCY AND COPIES OF THE TESTING AGENCY'S FINDINGS AND RECOMMENDATIONS SHALL BE FURNISHED TO THE ARCHITECT'S REPRESENTATIVE BY THE CONTRACTOR. ALL TOPSOIL SHALL BE AMENDED TO ACHIEVE SPECIFIED PH AND ORGANIC REQUIREMENTS. RE-TEST TOPSOIL PRIOR TO FINAL COMPLETION TO ENSURE REQUIREMENTS HAVE BEEN MET. NO TOPSOIL SHALL BE PLACED WHILE IN A FROZEN OR MUDDY CONDITION.
4. PLACE TOPSOIL IN AREAS WHERE REQUIRED TO OBTAIN THICKNESS AS SCHEDULED. PLACE TOPSOIL DURING DRY WEATHER. PROVIDE ADDITIONAL IMPORTED TOPSOIL REQUIRED TO BRING SURFACE TO PROPOSED FINISH GRADE, AS REQUIRED.
5. COMPACTED TOPSOIL THICKNESS AT THE FOLLOWING AREAS:
   - A. LAWN AREAS: 9 INCHES MINIMUM OR AS NECESSARY TO ACHIEVE EVEN GRADES WITH SURROUNDING LAWN AREAS.
   - B. PLANTER BEDS: 18 INCHES MINIMUM
6. FINE GRADE TOPSOIL TO SMOOTH, EVEN SURFACE WITH LOOSE, UNIFORMLY FINE TEXTURE. REMOVE RIDGES AND FILL DEPRESSIONS, AS REQUIRED TO MEET FINISH GRADES. FINISH GRADE OF TOPSOIL SHALL BE 2" BELOW FINISH GRADE OF PAVEMENTS AREAS FOR SOD AND 1" FOR SEED.
7. TOPSOIL STOCKPILE LOCATIONS TO BE COVERED COORDINATE WITH EROSION AND SEDIMENT CONTROL PLAN.
8. ALL GRAVEL, SUBBASE, AND OTHER IMPORTED FILL MATERIALS OTHER THAN TOPSOIL SHALL ONLY BE STOCKPILED IN PROPOSED IMPERVIOUS AREAS. NO GRAVEL OR ROCK MATERIALS SHALL BE STOCKPILED OR TEMPORARILY PLACED IN PROPOSED LANDSCAPE AREAS TO PREVENT LANDSCAPE AREAS FROM BEING CONTAMINATED WITH ROCK MATERIALS. CONTRACTOR SHALL SUBMIT A DETAILED STOCKPILE PLAN TO LANDSCAPE ARCHITECT AND OWNER FOR APPROVAL PRIOR TO ANY EARTHWORK OPERATIONS.

GRADING NOTES

1. BASIS OF BEARING (NAVD 88). THE REFERENCE BENCHMARK FOR THIS SURVEY IS THE CORS NETWORK. POSITIONS WERE COMPUTED USING THE FOLLOWING CORS STATIONS.

   CONFIRMATION OF ON-SITE BENCHMARKS. ANY BENCHMARK OR CONTROL POINT MUST BE CHECKED WITH A SECOND ON-SITE BENCHMARK/CONTROL POINT PRIOR TO USE.
2. BENCHMARK: () VERIFY WITH EXISTING CONDITIONS. VERTICAL DATUM = .
3. CONTOUR INTERVAL EQUALS ONE FOOT (1'-0").
4. ADD 2600' TO ALL SPOT ELEVATIONS.
5. CONTRACTOR TO VERIFY ALL EXISTING ELEVATIONS NOTED ON THIS PLAN AND NOTIFY THE DESIGN PROFESSIONAL WHEN ELEVATIONS DO NOT MATCH PLANS.
6. ALL TEST PITS LOCATED BENEATH STRUCTURES OR UNDER PAVEMENT AREAS, SHALL BE RE-EXCAVATED, BACKFILLED AND COMPACTED WITH APPROVED STRUCTURAL FILL, AS SPECIFIED.
7. COORDINATE ALL EARTHWORK OPERATIONS WITH MECHANICAL, AND ELECTRICAL ENGINEERING SHEETS.
8. GRADES SHOWN ARE FINISH GRADES.
9. ALL FINISHED GRADES SHALL BE SMOOTH AND UNIFORM.
10. PROVIDE POSITIVE DRAINAGE AWAY FROM BUILDING.
11. PROVIDE POSITIVE DRAINAGE TO DRAINAGE STRUCTURES, CURB CUTS, DRAINAGE SWALES, AND DRAIN INLETS.
12. ALL SLOPES SHALL BE GRADED AS NOTED PER PLAN.
13. ALL SLOPES SHALL BE GRADED TO A MAXIMUM OF 5:1 UNLESS OTHERWISE NOTED.
14. CONTOURS ARE TO CONVEY GENERAL GRADING CONCEPT. SPOT ELEVATIONS LABELED SLOPES TAKE PRECEDENCE.
15. ALL CONCRETE SIDEWALKS SHALL HAVE A MINIMUM OF ONE PERCENT (1%) CROSS SLOPE UNLESS OTHERWISE NOTED.
16. THE BOTTOM BASIN LEVEL OF ALL DRAINAGE SWALES SHALL BE FLAT AND SMOOTH UNLESS NOTED OTHERWISE.
17. ALL CHANGES REQUIRE APPROVAL BY THE DESIGN PROFESSIONAL AND THE APPROVING AGENCIES.
18. CONTRACTOR SHALL REFER TO SPECIFICATIONS AND DETAILS FOR ADDITIONAL REQUIREMENTS.
19. REFER TO SUMMARY PLAN FOR SITE WORK PHASING, ALTERNATES, AND COORDINATION WITH WORK BY OTHERS.
20. IN THE EVENT OF A DISCREPANCY, IMMEDIATELY NOTIFY THE DESIGN PROFESSIONAL.

STORM DRAIN NOTES

1. PROVIDE METALLIC LINED PLASTIC UNDERGROUND WARNING TAPE AT ALL PIPE LOCATIONS.
2. ALL POTABLE/NONPOTABLE WATER PIPING RELATIONSHIPS MUST COMPLY WITH CITY OF BOISE, ISPWC, AND IDAHO DEPARTMENT OF ENVIRONMENTAL QUALITY REQUIREMENTS. THE HORIZONTAL SEPARATION OF NON-POTABLE SERVICES AND POTABLE WATER SERVICES OR POTABLE WATER MAINS SHALL BE A MINIMUM OF SIX (6) FEET. WHERE IT IS NECESSARY FOR A POTABLE WATER MAIN AND NON POTABLE WATER MAIN TO CROSS WITH LESS THAN EIGHTEEN (18) INCHES OF VERTICAL SEPARATION, THE CROSSING SHALL BE CONSTRUCTED IN ACCORDANCE WITH SECTION 542.07.01 OF THE IDAHO RULES FOR PUBLIC DRINKING WATER SYSTEMS (IDAPA 58.01.08) AND SECTION 430.02 OF THE WASTEWATER RULES (IDAPA 58.01.16). ALL CROSSINGS MUST BE WITNESSED BY A REPRESENTATIVE OF BRECKON LAND DESIGN.
3. THE CONTRACTOR SHALL MAINTAIN ALL EXISTING DRAINAGE FACILITIES WITHIN THE CONSTRUCTION AREA UNTIL THE DRAINAGE IMPROVEMENTS ARE IN PLACE AND FUNCTIONING.
4. ALL PIPE AND PIPE JOINTS SHALL MEET AASHTO M-294, TYPE S PIPE REQUIREMENTS.
5. EXCAVATE SEEPAGE BEDS A MIN. OF 12" INTO FREE DRAINING MATERIAL.
6. DRAIN ROCK SHALL BE 1.5"-2" CLEAN ANGULAR WASHED DRAIN ROCK.
7. THE SIZE OF THE DRAINAGE AREA SHALL BE ENLARGED IF GROUND WATER IS ENCOUNTERED ABOVE THE BOTTOM OF THE DRAINAGE BED. IF THIS SITUATION OCCURS, CONTACT THE DESIGN PROFESSIONAL IMMEDIATELY FOR NEW SEEPAGE BED SIZING.
8. ALL DRAINAGE FACILITIES MUST BE INSPECTED BY BRECKON LAND DESIGN. 24 HOURS NOTICE REQUIRED.
9. ALL DRAINAGE FACILITIES MUST BE INSPECTED BY THE CITY 48 HOURS NOTICE IS REQUIRED, PRIOR TO PLACEMENT OF FILTER FABRIC.
10. PROVIDE POSITIVE DRAINAGE (MINIMUM ONE PERCENT) FROM ALL RAINWATER LEADERS TO DRAINAGE STRUCTURES AND ENSURE EIGHTEEN INCHES (18") OF COVER OVER ALL RAINWATER LEADERS TO ENSURE ADEQUATE FROST PROTECTION.
11. CONTRACTOR SHALL COORDINATE CONNECTION OF ROOF DRAINS WITH MECHANICAL CONTRACTOR. SEE MECHANICAL DRAWINGS FOR EXACT LOCATION OF ROOF DRAINS. ROOF DRAINS EXTEND FIVE FEET (5'-0") OUTSIDE THE BUILDING. CONNECT CLEANOUT/ STORM DRAIN AT THIS POINT.
12. LOCATE SUBSURFACE STORM WATER DISPOSAL FACILITIES AT LEAST 25 FEET FROM WATER MAINS. THIS REQUIREMENT DOES NOT APPLY TO CATCH BASINS OR SAND AND GREASE VAULTS.
13. SEEPAGE BED MUST BE FIVE FEET (5'-0") BACK FROM PROPERTY LINE AND NO GRADING SHALL BE PERMITTED WITHIN TWO FEET (2'-0") OF THE PROPERTY LINE.
14. ALL DRAINAGE FACILITIES MUST BE INSPECTED BY THE CITY OF BOISE PUBLIC WORKS. 24 HOURS NOTICE REQUIRED. CALL 208-384-3935.

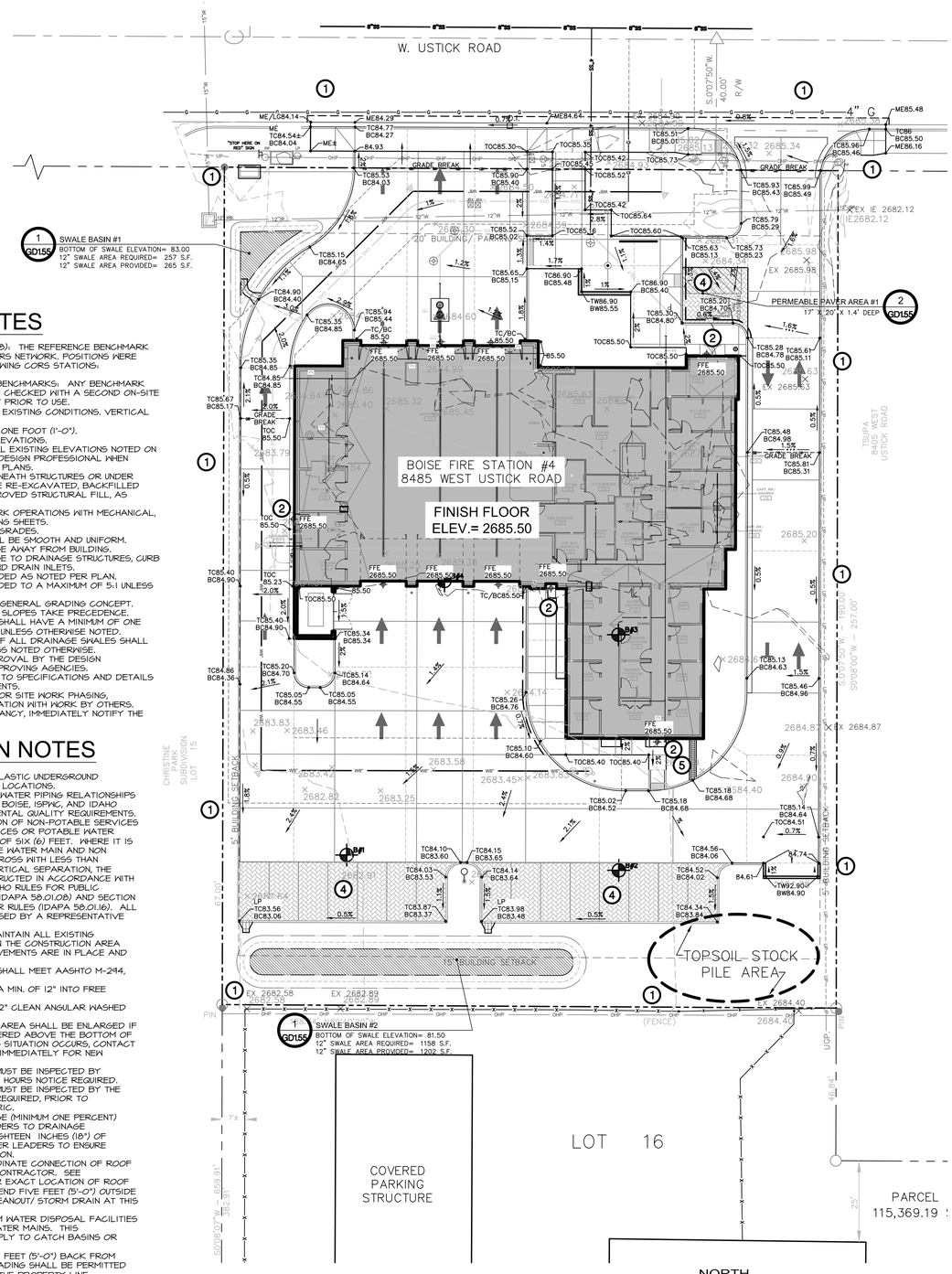

1 GRADING AND DRAINAGE PLAN
SCALE: 1"= 20'-0"

GRADING LEGEND

1040'	PROPOSED CONTOUR
1050	EXISTING CONTOUR
×1050.24	EXISTING SPOT ELEVATION
	TOPSOIL STOCK PILE AREA
GRADE BREAK	GRADE BREAK LINE
TC 1132.76± BC 1132.26	SPOT ELEVATION
2.55%	FLOW DIRECTION AND GRADIENT
	BOTTOM OF SWALE
	EXTENTS OF SWALE BASIN
	EXTENTS OF SEEPAGE BED
	INTEGRAL CURB/WALK LOCATION
	VERTICAL CURB LOCATION
	CURB AND GUTTER LOCATION
	SCORE JOINT (TYPICAL)
	EXPANSION JOINT (TYPICAL)
	ACCESSIBLE RAMP LOCATION WITH DETECTABLE WARNING SURFACE
	NEW CONCRETE FLATWORK
	CONCRETE VALLEY GUTTER AS DETAILED
B.O.S.	BOTTOM OF SWALE ELEVATION
TC/LG	TOP OF CURB/LIP OF GUTTER
TR/BR	TOP OF RAMP/BOTTOM OF RAMP
TW/BW	TOP OF WALL/BOTTOM OF WALL
FFE	FINISHED FLOOR ELEVATION
RE	RIM ELEVATION
IE	INVERT ELEVATION
ME	MATCH EXISTING ELEVATION
FG	FINISH GRADE ELEVATION
TA	TOP OF ASPHALT ELEVATION
TOC	TOP OF CONCRETE ELEVATION
HP	HIGH POINT OF FINISH GRADE
LP	LOW POINT OF FINISH GRADE
TC/BC	TOP OF CURB/BOTTOM OF CURB
CO	CLEANOUT LOCATION
RWL	NEW RAINWATER LEADER
SB	SPLASH BLOCK AS SPECIFIED
DO	CURB CUT/DRAINAGE OUTLET
	PIPE OUTFALL AS DETAILED
	UNDER WALK DRAIN AS DETAILED
	TRENCH DRAIN, SEE DETAIL.
BM	BENCHMARK
TP #1	APPROXIMATE SOIL TESTING LOCATION (VERIFY EXACT LOCATION) - SEE GEOTECHNICAL ENGINEERING REPORT

CALLOUT LEGEND

1. PROVIDE SMOOTH TRANSITIONS BETWEEN NEW AND EXISTING GRADES.
2. SLOPE ALL SURFACES ADJACENT TO DOORWAYS A MAXIMUM OF 2.0% AND NO LESS THAN 1.0% FOR A MINIMUM DISTANCE OF 5 FEET FROM BUILDING TO COMPLY WITH ADA REGULATIONS.
3. PROVIDE 6" DEEP DITCH TO DIRECT WATER AS SHOWN. ALL STORM WATER SHALL REMAIN ON SITE.
4. PERMEABLE PAVERS, SEE DETAIL.
5. UNDER WALK DRAIN, SEE DETAIL.
6. ADJUST UTILITY RIM ELEVATION AS REQUIRED TO BE FLUSH WITH NEW FINISH GRADE ELEVATIONS.

DISCLAIMER:

THESE SITE DISTURBANCE PLANS HAVE BEEN PREPARED FOR THE CONTRACTOR/ OWNER IN FULL COMPLIANCE WITH THE GOVERNING AUTHORITY'S SITE DISTURBANCE ORDINANCE. THE REQUIRED REGULATORY ITEMS HAVE BEEN INCORPORATED INTO THIS PARTICULAR PROJECT IN GOOD FAITH. BRECKON LAND DESIGN, INC. CAN NOT BE HELD RESPONSIBLE FOR INACCURATE BASE INFORMATION PROVIDED BY OTHERS, UNACCEPTABLE CONSTRUCTION METHODS, OR SITE MODIFICATIONS MADE WITHOUT CONSULTING BRECKON LAND DESIGN, INC. ALL LIABLITY WILL BE ASSUMED BY THE OWNER/CONTRACTOR IF A FINAL INSPECTION OF THE PROJECT HAS NOT BEEN PERFORMED BY BRECKON LAND DESIGN, INC. AND IDENTIFIED DEFICIENCIES CORRECTED BY THE CONTRACTOR/OWNER.

CAUTION NOTICE

THE CONTRACTOR IS SPECIFICALLY CAUTIONED THAT THE LOCATION AND/OR ELEVATION OF EXISTING UTILITIES AS SHOWN ON THESE PLANS IS BASED ON RECORDS OF THE VARIOUS UTILITY COMPANIES AND, WHERE POSSIBLE, MEASUREMENTS TAKEN IN THE FIELD. THE INFORMATION IS NOT TO BE RELIED ON AS BEING EXACT OR COMPLETE. THE CONTRACTOR MUST CALL THE LOCAL UTILITY LOCATION CENTER AT LEAST 48 HOURS BEFORE ANY EXCAVATION TO REQUEST EXACT FIELD LOCATIONS OF THE UTILITIES. IT SHALL BE THE RESPONSIBILITY OF THE CONTRACTOR TO RELOCATE ALL EXISTING UTILITIES WHICH CONFLICT WITH THE PROPOSED IMPROVEMENTS SHOWN ON THE PLANS.

811 Know what's below. Call before you dig.
CALL 2 BUSINESS DAYS IN ADVANCE BEFORE YOU DIG, GRADE, OR EXCAVATE FOR THE MARKING OF UNDERGROUND MEMBER UTILITIES

ARCHITECT:

COLE ARCHITECTS
COLE ARCHITECTS | 802 W. BANNOCK SUIT 208
Boise, ID 83702 | (208) 345-1800

TCA architecture • planning
TCA | 6211 Roosevelt Way NE
Seattle, WA 98115 | (206) 522-3820

STAMP:

STATE OF IDAHO · JOHN S. BRECKON · LANDSCAPE ARCHITECT
NOT FOR CONSTRUCTION

CONSULTANT:

BRECKON landdesign
- Landscape Architecture
- Erosion & Sediment Control
- Geographic Info Systems
- Graphic Communication
- Water Management
- Irrigation Design
- Land Planning

www.breckonlanddesign.com
Fax: 208-376-6528
Phone: 208-376-5153
181 East 50th Street
Garden City, Idaho 83714

PROJECT INFORMATION:

BOISE CITY OF TREES
BOISE FIRE Est. 1891 DEDICATION

City of Boise Fire Station 4
8485 W. Ustick Rd. Boise, ID 83704

REVISIONS:

MARK	DATE	DESCRIPTION

PROJECT PHASE	Project Status
PROJECT NUMBER	15043
PROJECT MANAGER	R. TeBeau
PROJECT ARCHITECT	R. TeBeau
DESIGN	JB
DRAWN BY	JB, LP, JR, BS

SHEET NAME:

GRADING AND DRAINAGE PLAN

SHEET NUMBER:

C1.50

1.29.16

S:_projects\2015\15043 boise fire #4\CAD\15043 150 GD05.dwg plotted by user01 on Mon, February 1 2016 at 05:43 PM

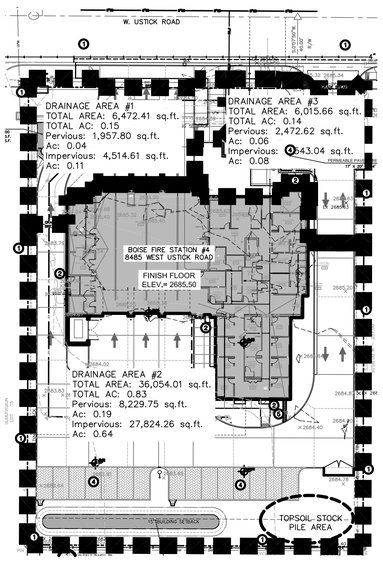

BASIN MAP

NORTH

0 10' 20' 40'

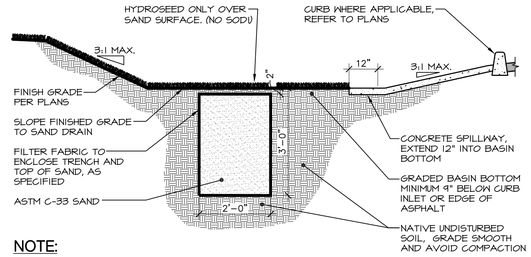

NOTE:

1. THE USE OF SILTY LOAM OR CLAY IS PROHIBITED FROM USE AS BASIN BOTTOM MATERIAL.
2. DO NOT COMPACT BASIN AREA WITH HEAVY EQUIPMENT. IF COMPACTION OCCURS, RIP TO 12" AND REGRADE, SEE DETAIL.
3. IN THE EVENT THE SWALE IS USED AS A SEDIMENT BASIN, REMOVE SILT, REGRADE TO SPECIFIED TOLERANCES.
4. REFER TO SPECIFICATIONS FOR SWALE PERCOLATION TESTING REQUIREMENTS.
5. CONTRACTOR SHALL EXCAVATE A TEST PIT AT SWALE LOCATION TO CONFIRM THE DEPTH TO FREE DRAINING SOILS AND GROUNDWATER IN THE PRESENCE OF THE LANDSCAPE ARCHITECT.
6. GEOTEXTILE FILTER FABRIC OF PP OR POLYESTER FIBERS OR COMBINATION OF BOTH, WITH FLOW RATE RANGE FROM 110 TO 330 GPM/SQ. FT. WHEN TESTED ACCORDING TO ASTM D4491.

1 DRAINAGE SWALE

Scale: 1/2"= 1'-0"

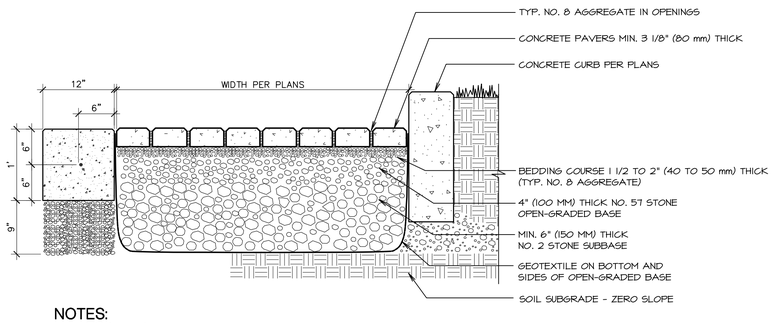

NOTES:

1. 2 3/8" (60 MM) THICK PAVERS MAY BE USED IN PEDESTRIAN APPLICATIONS.
2. NO. 2 STONE SUBBASE THICKNESS VARIES WITH DESIGN. CONSULT ICPI PERMEABLE INTERLOCKING CONCRETE PAVEMENT MANUAL.

2 PERMEABLE PAVEMENT WITH FULL EXFILTRATION

NOT TO SCALE

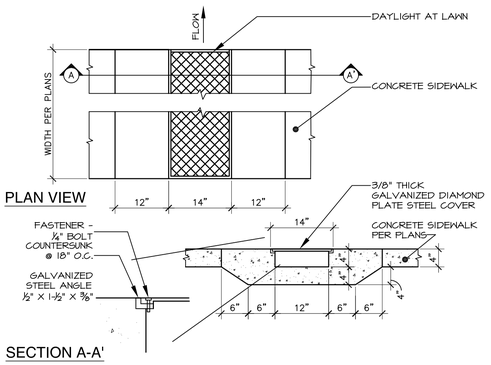

PLAN VIEW

SECTION A-A'

4 UNDERWALK DRAIN

Scale: 3/4"= 1'-0"

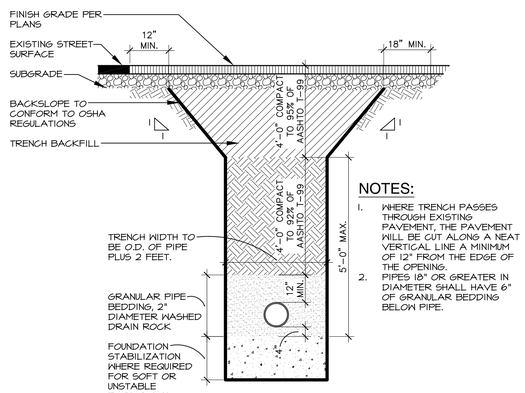

NOTES:

1. WHERE TRENCH PASSES THROUGH EXISTING PAVEMENT, THE PAVEMENT WILL BE CUT ALONG A NEAT VERTICAL LINE A MINIMUM OF 12" FROM THE EDGE OF THE OPENING.
2. PIPES 18" OR GREATER IN DIAMETER SHALL HAVE 6" OF GRANULAR BEDDING BELOW PIPE.

3 TRENCH SECTION

NOT TO SCALE

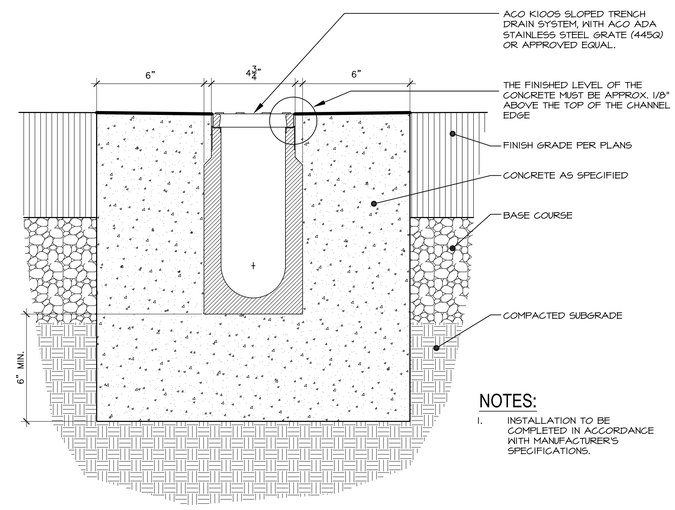

NOTES:

1. INSTALLATION TO BE COMPLETED IN ACCORDANCE WITH MANUFACTURER'S SPECIFICATIONS.

5 TRENCH DRAIN EMBEDMENT

Scale: 3"= 1'-0"

Know what's below. Call before you dig.

CALL 2 BUSINESS DAYS IN ADVANCE BEFORE YOU DIG, GRADE, OR EXCAVATE FOR THE MARKING OF UNDERGROUND MEMBER UTILITIES

ARCHITECT:

COLE ARCHITECTS

COLE ARCHITECTS | 802 W. BANNOCK SUIT 208
Boise, ID 83702 | (208) 345-1800

TCA architecture • planning

TCA | 6211 Roosevelt Way NE
Seattle, WA 98115 | (206) 522-3820

STAMP:

NOT FOR CONSTRUCTION

CONSULTANT:

BRECKON landdesign

- Landscape Architecture
- Erosion & Sediment Control
- Geographic Info Systems
- Graphic Communication
- Water Management
- Irrigation Design
- Land Planning

www.breckonlanddesign.com
Fax: 208-376-6528
Phone: 208-376-5153
181 East 50th Street
Garden City, Idaho 83714

PROJECT INFORMATION:

BOISE CITY OF TREES

BOISE FIRE Est. 1878 DEDICATION

City of Boise Fire Station 4

8485 W. Ustick Rd. Boise, ID 83704

REVISIONS:

MARK	DATE	DESCRIPTION

PROJECT PHASE	Project Status
PROJECT NUMBER	15043
PROJECT MANAGER	R. TeBeau
PROJECT ARCHITECT	R. TeBeau
DESIGN	JB
DRAWN BY	JB, LP, JR, BS

SHEET NAME:

GRADING AND DRAINAGE DETAILS

SHEET NUMBER:

C1.55

1.29.16

S:_projects\2015\15043 boise fire #4\CAD\15043 150 GD05.dwg plotted by: user01 on Mon, February 1 2016 at 05:43 PM

DISCLAIMER:

THESE SITE DISTURBANCE PLANS HAVE BEEN PREPARED FOR THE CONTRACTOR/ OWNER IN FULL COMPLIANCE WITH THE GOVERNING AUTHORITY'S SITE DISTURBANCE ORDINANCE. THE REQUIRED REGULATORY ITEMS HAVE BEEN INCORPORATED INTO THIS PARTICULAR PROJECT IN GOOD FAITH. BRECKON LAND DESIGN, INC. CAN NOT BE HELD RESPONSIBLE FOR INACCURATE BASE INFORMATION PROVIDED BY OTHERS, UNACCEPTABLE CONSTRUCTION METHODS, OR SITE MODIFICATIONS MADE WITHOUT CONSULTING BRECKON LAND DESIGN, INC. ALL LIABILITY WILL BE ASSUMED BY THE OWNER/CONTRACTOR IF A FINAL INSPECTION OF THE PROJECT HAS NOT BEEN PERFORMED BY BRECKON LAND DESIGN, INC. AND IDENTIFIED DEFICIENCIES CORRECTED BY THE CONTRACTOR/OWNER.

TURF AREA PREPARATION NOTES:

I. LIMIT TURF SUBGRADE PREPARATION TO AREAS TO BE PLANTED.
2. NEWLY GRADED SUBGRADES: LOOSEN SUBGRADE TO A MINIMUM DEPTH OF 4 INCHES. REMOVE STONES LARGER THAN 1 INCH IN ANY DIMENSION AND STICKS, ROOTS, RUBBISH, AND OTHER EXTRANEOUS MATTER AND LEGALLY DISPOSE OF THEM OFF OWNER'S PROPERTY.
   A. SPREAD PLANTING SOIL TO A DEPTH OF 9 INCHES IN TURF AREAS AND 18 INCHES AT SHRUB BED AREAS BUT NOT LESS THAN REQUIRED TO MEET FINISH GRADES AFTER LIGHT ROLLING AND NATURAL SETTLEMENT. DO NOT SPREAD IF PLANTING SOIL OR SUBGRADE IS FROZEN, MUDDY, OR EXCESSIVELY WET.
I. SPREAD PLANTING SOIL OVER LOOSENED SUBGRADE.
2. REDUCE ELEVATION OF PLANTING SOIL TO ALLOW FOR SOIL THICKNESS OF SOD.

3. UNCHANGED SUBGRADES: IF TURF IS TO BE PLANTED IN AREAS UNALTERED OR UNDISTURBED BY EXCAVATING, GRADING, OR SURFACE-SOIL STRIPPING OPERATIONS, PREPARE SURFACE SOIL AS FOLLOWS:
   A. REMOVE EXISTING GRASS, VEGETATION, AND TURF. DO NOT MIX INTO SURFACE SOIL.
   B. LOOSEN SURFACE SOIL TO A DEPTH OF AT LEAST 6 INCHES. PROVIDE WEED ABATEMENT PROCEDURE. APPLY SOIL AMENDMENTS AND FERTILIZERS ACCORDING TO PLANTING SOIL MIX PROPORTIONS AND MIX THOROUGHLY INTO TOP 6 INCHES OF SOIL. TILL SOIL TO A HOMOGENEOUS MIXTURE OF FINE TEXTURE.
I. APPLY SOIL AMENDMENTS DIRECTLY TO SURFACE SOIL BEFORE LOOSENING.
   C. REMOVE STONES LARGER THAN 1 INCH IN ANY DIMENSION AND STICKS, ROOTS, TRASH, AND OTHER EXTRANEOUS MATTER.
   D. LEGALLY DISPOSE OF WASTE MATERIAL, INCLUDING GRASS, VEGETATION, AND TURF, OFF OWNER'S PROPERTY.

4. FINISH GRADING: GRADE PLANTING AREAS TO A SMOOTH, UNIFORM SURFACE PLANE WITH LOOSE, UNIFORMLY FINE TEXTURE. GRADE TO WITHIN PLUS OR MINUS 1/2 INCH OF FINISH ELEVATION. ROLL AND RAKE, REMOVE RIDGES, AND FILL DEPRESSIONS TO MEET FINISH GRADES. LIMIT FINISH GRADING TO AREAS THAT CAN BE PLANTED IN THE IMMEDIATE FUTURE.
5. MOISTEN PREPARED AREA BEFORE PLANTING IF SOIL IS DRY. WATER THOROUGHLY AND ALLOW SURFACE TO DRY BEFORE PLANTING. DO NOT CREATE MUDDY SOIL.
6. BEFORE PLANTING, OBTAIN LANDSCAPE ARCHITECT'S ACCEPTANCE OF FINISH GRADING; RESTORE PLANTING AREAS IF ERODED OR OTHERWISE DISTURBED AFTER FINISH GRADING.
7. DO NOT SOW IMMEDIATELY FOLLOWING RAIN, OR WHEN GROUND IS TOO DRY. TEMPERATURE SHALL BE BETWEEN 55 F AND 95 F FOR A 24 HOUR PERIOD. WIND SHALL BE LESS THAN 5 MPH.
8. TURF SEED SHALL BE SOWN AT A RATE PER SEED SUPPLIER RECOMMENDATIONS.
9. SEED SHALL BE HYDROSEEDED OR DRILL SEEDED AT THE CONTRACTORS OPTION. AREAS WITH A 4:1 OR GREATER SLOPE SHALL BE HYDROSEEDED.

EROSION AND SEDIMENT CONTROL NOTES

I. ALL BMPs SHALL CONFORM TO THE STATE OF IDAHO CATALOG OF STORM WATER BEST MANAGEMENT PRACTICES MANUAL.
2. ANY CHANGE FROM THE PLANS SHALL BE APPROVED BY THE DESIGNER AND THE GOVERNING AGENCIES AS APPLICABLE.
3. CONTRACTOR SHALL CONTACT DIGLINE 48 HOURS PRIOR TO ANY EXCAVATION. 1-800-342-1585
4. THIS DRAWING HAS BEEN PREPARED BASED UPON INFORMATION PROVIDED, IN PART BY OTHERS. WHILE THIS INFORMATION IS BELIEVED TO BE RELIABLE, BRECKON LAND DESIGN, INC. CANNOT ASSURE ITS ACCURACY AND THUS IS NOT RESPONSIBLE FOR THE ACCURACY OF THIS DRAWING OR FOR ANY ERRORS OR OMISSIONS WHICH MAY HAVE BEEN INCORPORATE INTO IT AS A RESULT. BRECKON LAND DESIGN, INC. ASSUMES NO LIABILITY FOR ANY MISINFORMATION.
5. RESPONSIBLE PERSON(S) SHALL BE RESPONSIBLE TO MAKE FIELD ADJUSTMENTS AS NECESSARY TO ACCOMMODATE CONSTRUCTION ACTIVITIES AND MEET ALL LOCAL, STATE AND FEDERAL REQUIREMENTS.
6. ALL ACCESS POINTS USED FOR CONSTRUCTION FROM THE SITE TO PUBLIC, DEVELOPED ROADS SHALL BE STABILIZED AS PER DETAIL.
7. ANY SEDIMENT WHICH ENTERS EXISTING DRAINAGE INLETS OR THE DRAINAGE SYSTEM SHALL BE REMOVED.
8. THE CONTRACTOR SHALL BE RESPONSIBLE FOR CLEANING DRAIN INLETS ADJACENT TO AND DOWN STREAM OF THE SITE AS REQUIRED TO REMOVE SEDIMENTS.
9. MAINTAIN OPTIMUM SOIL MOISTURE AS NECESSARY TO PREVENT DUST EROSION. (BMP #7).
10. ONLY DISTURB, CLEAR, OR GRADE AREAS NECESSARY FOR CONSTRUCTION. FLAG OR OTHERWISE DELINEATE AREAS NOT TO BE DISTURBED. EXCLUDE VEHICLES AND CONSTRUCTION EQUIPMENT FROM THESE AREAS TO PRESERVE NATURAL VEGETATION. (BMP #4)
11. ALL AREAS DISTURBED BY CONSTRUCTION ACTIVITIES SHALL BE PREPARED AND HYDROSEEDED. A DISTURBED AREA SHALL BE WHERE CONSTRUCTION ACTIVITIES INCLUDING TRENCHING, DEMOLITION, EARTHWORK, MATERIAL STORAGE, STAGING AND PARKING OR ANY OTHER FORM OF EXCAVATION, COMPACTION OR TRAFFIC THAT RESULTS IN THE REMOVAL OR DISPLACEMENT OF EXISTING GROUNDCOVER OR GRADE. (BMP#12)
12. HYDROSEED WITH A WOOD CELLULOSE FIBER MULCH APPLIED AT A RATE OF 2000 # PER ACRE. USE AN ORGANIC TACKIFIER AT NO LESS THAN 150 #/ACRE OR PER MANUFACTURER'S RECOMMENDATION IF HIGHER. APPLICATION OF TACKIFIER SHALL BE HEAVIER AT EDGES, IN VALLEYS, AND AT CRESTS OF BANKS AND OTHER AREAS WHERE SEED CAN BE MOVED BY WIND OR WATER. PRIOR TO PROJECT COMPLETION/ ACCEPTANCE, ALL DISTURBED AREAS WILL BE INSPECTED FOR PROPER TURF ESTABLISHMENT. (BMP#11)
13. AREAS TO BE FILLED SHALL BE CLEARED, GRUBBED TO REMOVE TREES, VEGETATION, ROOTS AND OTHER OBJECTIONABLE MATERIAL, AND STRIPPED OF TOPSOIL.
14. TOP SOIL SHALL BE STOCK PILED ON SITE COORDINATE WITH OWNER FOR EXACT LOCATION. NO TOP SOIL SHALL BE REMOVED FROM SITE. (BMP#7).
15. ALL STORM WATER WILL BE CONTAINED ON SITE.
16. DEWATERING IS NOT EXPECTED FOR THIS SITE.
17. WORKMAN SHALL PARK IN THE AREA DESIGNATED FOR WORKMAN PARKING OR OFF SITE TO HELP PREVENT DIRT AND MUD TRACKING.
18. PROVIDE WASTE CONTAINERS FOR BUILDING MATERIALS IN WASTE STORAGE CONTAINMENT AREA. DISPOSE AT A FREQUENCY ACCORDING TO CONTAINER SIZE.

PROJECT DESCRIPTION

A. PURPOSE
CONSTRUCT A NEW RESIDENTIAL HOME WITH DRIVEWAY, STAIRCASE, PATIO, AND LANDSCAPE AREAS PER PLANS BY BRECKON LAND DESIGN INC.

B. LOCATION
THE SUBJECT PROPERTY IS LOCATED AT 1833 RIDGECREST DR, BOISE, IDAHO 83707.

THE LIMITS OF CONSTRUCTION ARE APPROXIMATELY 0.20 ACRES AS SHOWN ON PLAN.

THE MAJORITY OF ONSITE STORM WATER FROM THE AREA OF IMPACT WILL BE DIRECTED OFF SITE TO THE SUBDIVISION STORM SEWER SYSTEMNATURAL AREAS. IT WILL BE PRETREATED FOR SEDIMENT THROUGH THE USE OF FIBER ROLLS AND STRAW WATTLES. A SMALLER PORTION OF STORMWATER, THAT WHICH FALLS DIRECTLY ONTO LANDSCAPED AREAS WILL BE ALLOWED TO PERCOLATE DIRECTLY INTO THE GROUND. STORM WATER FROM THE CITY STREETS WILL CONTINUE TO BE DIRECTED TO THE SUBDIVISION STORM DRAINAGE SYSTEM.

C. SITE DESCRIPTION AND DRAINAGE

THE SITE IS CURRENTLY AN UNDEVELOPED LOT AND BARE SLOPES THERE IS NATIVE VEGETATION LOCATED ON THE EAST SLOPE ADJACENT TO THE PROPERTY. THE SITE IS BOUNDED BY EXISTING RESIDENTIAL HOUSING AND EMPTY LOTS ON THE NORTH, EAST, AND WEST. THE SOUTH PROPERTY LINE IS BORDERED BY EXISTING FOOTHILLS VEGETATION.

I. EXISTING DRAINAGE
THE EXISTING SITE IS RELATIVELY STEEP WITH A SLOPES RANGING FROM 3% TO 35% WITHIN THE DISTURBANCE AREA. FLOWS TEND TO SLOPE TOWARDS THE SOUTHERN PROPERTY LINE. UNDISTURBED AREAS ALONG THE SOUTH BOUNDARIES SLOPE AWAY FROM THE PROPERTY IN THAT DIRECTION AT AN AVERAGE OF 10%. STORM WATER RUNOFF GENERALLY STAYS ON SITE AND PERCOLATES DIRECTLY INTO THE GROUND THROUGH PERMEABLE BARE LAND SURFACES. AREAS DIRECTLY ADJACENT TO THE PROPERTY LINE FLOW DIRECTLY INTO THE SUBDIVISIONS STORM SEWER SYSTEM IN THE PUBLIC RIGHT OF WAY AND THE NATURALLY VEGETATED AREAS TO THE SOUTH. INLETS ARE LOCATED DIRECTLY OFF SITE ALONG RIDGECREST DR.

2. DRAINAGE DURING CONSTRUCTION
THE MAJORITY OF RUNOFF FROM THE PROPOSED CONSTRUCTION AREA WILL BE CONTAINED ON SITE WHILE A LESSER PORTION WILL CONTINUE TO FLOW INTO THE PUBLIC RIGHT OF AWAY AND THE NATURAL AREAS AS DESCRIBED ABOVE. FIBER ROLLS AND STRAW WATTLES WILL BE INSTALLED ALONG THE DOWNSTREAM AREAS OF CONSTRUCTION TO HELP PREVENT RUNOFF ONTO ADJACENT PROPERTIES. EXISTING VEGETATION WILL BE PRESERVED TO THE EXTENT PRACTICAL TO HELP PREVENT EROSION.

3. POST CONSTRUCTION
ALL TREATMENT AND RETENTION OF STORM WATER WILL BE RETURNED TO THE EXISTING CONDITIONS WITH THE ADDITIONAL BENEFITS OF STABILIZED SURFACES TO CONTROL THE EROSION AND SEDIMENTATION FROM RUNOFF AS WELL AS VEGETATED FILTRATION THROUGH NEW LANDSCAPE AREAS..

D. DISTURBED AREA
TOTAL DISTURBED AREA WILL BE APPROXIMATELY 0.20 ACRES.
TOTAL PROPERTY SIZE IS APPROXIMATELY 0.20 ACRES.

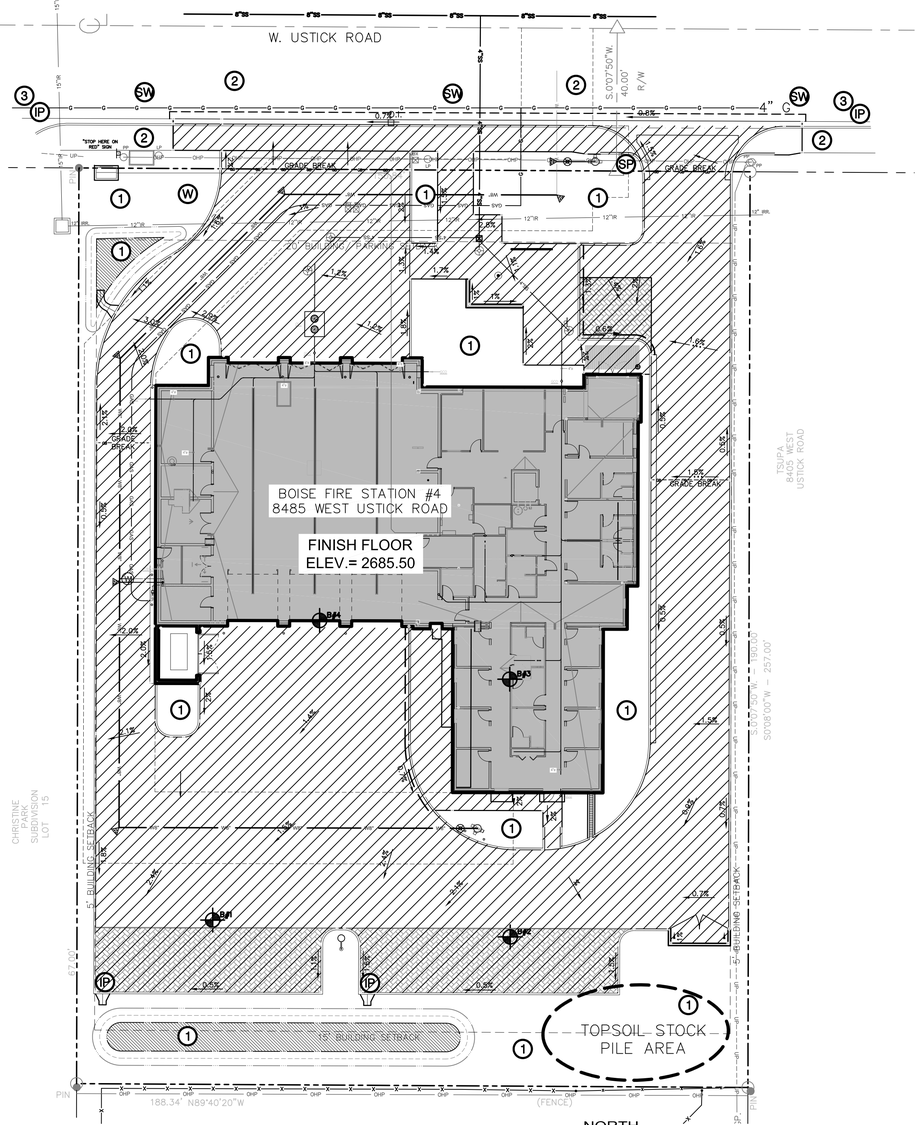

1 EROSION AND SEDIMENT CONTROL PLAN
SCALE: 1" = 20' - 0"

GENERAL NOTES

I. ALL BMPS SHALL CONFORM TO THE STATE OF IDAHO CATALOG OF STORM WATER BEST MANAGEMENT PRACTICES MANUAL.
2. CONTRACTOR SHALL HAVE PLANS AT WORK SITE STAMPED "APPROVED FOR CONSTRUCTION" BY THE BOISE CITY PUBLIC WORKS DEPARTMENT.
3. ANY CHANGE FROM THE PLANS SHALL BE APPROVED BY THE LANDSCAPE ARCHITECT AND THE GOVERNING AGENCIES AS APPLICABLE.
4. CONTRACTOR SHALL CONTACT DIGLINE 48 HOURS PRIOR TO ANY EXCAVATION. 1-800-342-1585
5. ALL CONSTRUCTION IN THE RIGHT-OF-WAY SHALL CONFORM TO THE LATEST EDITION OF THE ISPWC AND THE ACHD SUPPLEMENTAL SPECIFICATIONS. NO EXCEPTIONS TO DISTRICT POLICY, STANDARDS, AND THE ISPWC WILL BE ALLOWED UNLESS SPECIFICALLY AND PREVIOUSLY APPROVED IN WRITING BY THE DISTRICT.
6. THIS DRAWING HAS BEEN PREPARED BASED UPON INFORMATION PROVIDED, IN PART BY OTHERS. WHILE THIS INFORMATION IS BELIEVED TO BE RELIABLE, BRECKON LAND DESIGN, INC. CANNOT ASSURE ITS ACCURACY AND THUS IS NOT RESPONSIBLE FOR THE ACCURACY OF THIS DRAWING OR FOR ANY ERRORS OR OMISSIONS WHICH MAY HAVE BEEN INCORPORATE INTO IT AS A RESULT. BRECKON LAND DESIGN, INC. ASSUMES NO LIABILITY FOR ANY MISINFORMATION.
7. RESPONSIBLE PERSON (S) SHALL BE RESPONSIBLE TO MAKE FIELD ADJUSTMENTS AS NECESSARY TO ACCOMMODATE CONSTRUCTION ACTIVITIES AND MEET ALL LOCAL, STATE AND FEDERAL REQUIREMENTS.

ESC BMP IMPLEMENTATION

I. ALL BASE ESC MEASURES (INLET PROTECTION, PERIMETER SEDIMENT CONTROL, GRAVEL CONSTRUCTION ENTRANCES, ETC.) MUST BE IN PLACE, FUNCTIONAL, AND APPROVED IN AN INITIAL INSPECTION, PRIOR TO COMMENCEMENT OF CONSTRUCTION ACTIVITIES.
2. SEDIMENT BARRIERS APPROVED FOR USE INCLUDE SEDIMENT FENCE, BERMS CONSTRUCTED OUT OF MULCH, CHIPPINGS, OR OTHER SUITABLE MATERIAL, STRAW WATTLES, OR OTHER APPROVED MATERIALS.
3. SENSITIVE RESOURCES INCLUDING, BUT NOT LIMITED TO, TREES, WETLANDS, AND RIPARIAN PROTECTION AREAS SHALL BE CLEARLY DELINEATED WITH ORANGE CONSTRUCTION FENCING OR CHAIN LINK FENCING IN A MANNER THAT IS CLEARLY VISIBLE TO ANYONE IN THE AREA. NO ACTIVITIES ARE PERMITTED TO OCCUR BEYOND THE CONSTRUCTION BARRIER.
4. CONSTRUCTION ENTRANCES SHALL BE INSTALLED AT THE BEGINNING OF CONSTRUCTION AND MAINTAINED FOR THE DURATION OF THE PROJECT. ADDITIONAL MEASURES INCLUDING, BUT NOT LIMITED TO, STREET SWEEPING, AND VACUUMING, MAY BE REQUIRED TO INSURE THAT ALL PAVED AREAS ARE KEPT CLEAN FOR THE DURATION OF THE PROJECT.
5. RUN-ON AND RUN-OFF CONTROLS SHALL BE IN PLACE AND FUNCTIONING PRIOR TO BEGINNING SUBSTANTIAL CONSTRUCTION ACTIVITIES. RUN-ON AND RUN-OFF CONTROL MEASURES INCLUDE; SLOPE DRAINS (WITH OUTLET PROTECTION), CHECK DAMS, SURFACE ROUGHENING, AND BANK STABILIZATION.

WEED ABATEMENT NOTES:

I. ALL AREAS TO BE PLANTED OR HYDROSEEDED SHALL HAVE WEED ABATEMENT OPERATIONS PERFORMED ON THEM PRIOR TO PLANTING OR HYDROSEEDING.
2. CONTRACTOR SHALL SPRAY ALL EXPOSED WEEDS WITH @ROUND-UPA (CONTACT HERBICIDE) OR APPROVED EQUAL.
3. DO NOT WATER FOR AT LEAST SEVEN (7) DAYS. REMOVE EXPOSED WEEDS FROM THE SITE.
4. CONTRACTOR SHALL OPERATE THE AUTOMATIC IRRIGATION SYSTEM FOR A PERIOD OF FOURTEEN (14) DAYS, AT CONCLUSION OF THIS WATERING PERIOD, DISCONTINUE WATERING FOR THREE TO FIVE (3-5) DAYS.
5. APPLY SECOND APPLICATION OF @ROUND-UPA TO ALL EXPOSED WEEDS. APPLY IN STRICT CONFORMANCE WITH MANUFACTURER'S SPECIFICATIONS AND INSTRUCTIONS. DO NOT WATER FOR AT LEAST SEVEN (7) DAYS. REMOVE WEEDS FROM THE SITE.
6. IF ANY EVIDENCE OF WEED GERMINATION EXISTS AFTER TWO (2) APPLICATIONS, CONTRACTOR SHALL BE DIRECTED TO PERFORM A THIRD APPLICATION.
7. AT THE TIME OF PLANTING AND HYDROSEEDING, ALL PLANTING AREAS SHALL BE WEED FREE.

811 Know what's below. Call before you dig.

CALL 2 BUSINESS DAYS IN ADVANCE BEFORE YOU DIG, GRADE, OR EXCAVATE FOR THE MARKING OF UNDERGROUND MEMBER UTILITIES

EROSION AND SEDIMENT CONTROL LEGEND

- (IP) CURB INLET PROTECTION. PRIOR TO CONSTRUCTION INSTALL SEDIMENT BARRIER PER STATE OF IDAHO CATALOG OF STORM WATER BEST MANAGEMENT PRACTICES. MAINTAIN UNTIL ALL CONSTRUCTION IS COMPLETE. REMOVE SEDIMENT BUILD UP AS NEEDED.
  IN TURF AREAS PROVIDE: FILTER FABRIC FENCE INLET FILTER.
  IN ASPHALT AREAS PROVIDE: DANDY BAG OR DANDY CURB BAG OR APPROVED EQUAL.
  (800) 591-2284, www.dandyproducts.com
- (SE) STABILIZED ENTRANCE. PRIOR TO CONSTRUCTION INSTALL AND MAINTAIN 50 FEET OF 6" MINUS PITRUN MATERIAL AS INDICATED PER THE STATE OF IDAHO CATALOG OF STORM WATER BEST MANAGEMENT PRACTICES. THIS SHALL BE MAINTAINED THROUGHOUT CONSTRUCTION UNTIL BASE MATERIAL IS INSTALLED. PROVIDE SWEEPING DAILY OR AS NEEDED TO REMOVE ANY TRACKING OF MUD AND/OR DIRT ONTO EXISTING ASPHALT.
- (FR) FIBER ROLLS OR STRAW WATTLES. INSTALL FIBER ROLLS AS INDICATED PER THE STATE OF IDAHO CATALOG OF STORM WATER BEST MANAGEMENT PRACTICES.
- (W) CONCRETE WASHOUT LOCATION.
- (HZ) HAZARD MATERIALS STORAGE AREA WITH SPILL KIT AND WASTE CONTAINER.
- (P) CONTRACTOR PARKING AREA
- (SA) STAGING AREA FOR EQUIPMENT AND MATERIAL STORAGE.
- (DP) POTENTIAL RECEIVING WATERS POINT OR SITE DISCHARGE POINT.
- (SP) POST CITY ISSUED EROSION CONTROL AND STORM WATER MANAGEMENT SIGN
- (GB) PROVIDE GRAVEL BAG AT FLOW LINE OF BORROW DITCH AT THIS LOCATION.
- (SW) INCREASED STREET SWEEPING, WASHING & CLEANING MEASURES ALONG ROAD FRONTAGE CONSTRUCTION.
- (R) PORTABLE RESTROOM LOCATION
- CONSTRUCTION LIMITS, EXTENTS OF SITE DISTURBANCE
- PROPOSED LANDSCAPE AND TURF REPAIR AREAS,
- PROPOSED CONCRETE DRIVEWAY, WALKWAY AND PATIO.
- STAGING AREA
- STABILIZED CONSTRUCTION ENTRANCE, SEE DETAIL.
- PROPOSED BUILDING

CALLOUT LEGEND

1. PROPOSED LAWN AND LANDSCAPING FINAL STABILIZATION.
2. EXISTING IMPERVIOUS AREAS TO REMAIN.
3. CONTRACTOR IS RESPONSIBLE FOR LOCATING ALL STORM WATER INLETS DIRECTLY DOWNSTREAM OF SITE AND INSTALLING INLET PROTECTION AS SPECIFIED.

CONTACTS

RESPONSIBLE PERSON(S):
LICENSE NO:
EXPIRES:

SIGNATURE:_____DATE:_____
COMPANY:
ADDRESS:

CITY OF BOISE
LICENSED EROSION AND SEDIMENT CONTROL PLAN DESIGNER LICENSE NO: CON05-00359
JON BRECKON

SIGNATURE:_____DATE:_____
COMPANY: BRECKON LAND DESIGN, INC.
ADDRESS: 181 EAST 50TH STREET
GARDEN CITY, IDAHO 83714

AREA MAP

PROJECT LOCATION

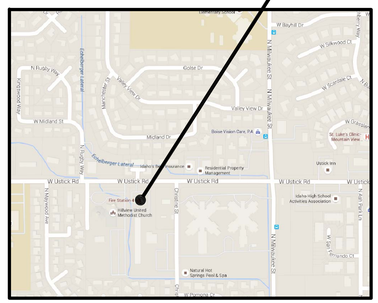

ARCHITECT:

COLE ARCHITECTS

COLE ARCHITECTS | 802 W. BANNOCK SUIT 208
Boise, ID 83702 | (208) 345-1800

TCA architecture • planning

TCA | 6211 Roosevelt Way NE
Seattle, WA 98115 | (206) 522-3820

STAMP:

STATE OF IDAHO — JON S. BRECKON — LICENSED LANDSCAPE ARCHITECT

NOT FOR CONSTRUCTION

CONSULTANT:

BRECKON landdesign

- Landscape Architecture
- Erosion & Sediment Control
- Geographic Info Systems
- Graphic Communication
- Water Management
- Irrigation Design
- Land Planning

www.breckonlanddesign.com
Fax: 208-376-6528
Phone: 208-376-5153
181 East 50th Street
Garden City, Idaho 83714

PROJECT INFORMATION:

BOISE CITY OF TREES

BOISE FIRE Est. 1890 DEDICATION

City of Boise Fire Station 4

8485 W. Ustick Rd. Boise, ID 83704

REVISIONS:

MARK	DATE	DESCRIPTION

PROJECT PHASE	Project Status
PROJECT NUMBER	15043
PROJECT MANAGER	R. TeBeau
PROJECT ARCHITECT	R. TeBeau
DESIGN	
DRAWN BY	JB, LP, JR, BS

SHEET NAME:

EROSION AND SEDIMENT CONTROL PLAN

SHEET NUMBER:

ESC1.60

1.29.16

S:_projects\2015\15043 boise fire #4\CAD\15043 160 esc04.dwg plotted by user01 on Mon, February 1 2016 at 05:46 PM

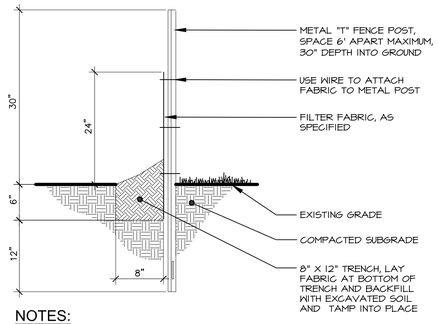

NOTES:

1. INSTALL SILT FENCE AT TOE OF FILL SLOPES AND LOCATION WHERE SEDIMENT MAY MOVE OFF SITE.
2. SILT FENCES SHALL REMAIN IN PLACE UNTIL SLOPES HAVE STABILIZED.
3. SEE STATE OF IDAHO CATALOG OF STORM WATER BEST MANAGEMENT PRACTICES, BMP #25 FOR ADDITIONAL INFORMATION.

1 SILT FENCE

Scale: 1"= 1'-0"

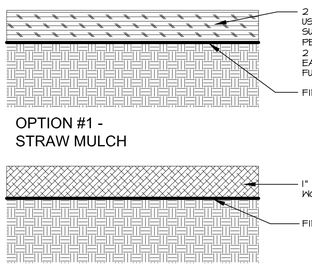

NOTES:

1. PREPARE SOIL SURFACE AND SEED WITH RECOMMENDED SEED MIX PRIOR TO APPLICATION OF THE MULCH.
2. ALL MULCHING SHALL COVER 100% OF THE GROUND SURFACE.
3. MULCHES GENERALLY REDUCE THE FERTILITY OF THE SOIL THEREFORE, FERTILIZER TREATMENTS MAY BE REQUIRED.

2 MULCH

NOT TO SCALE

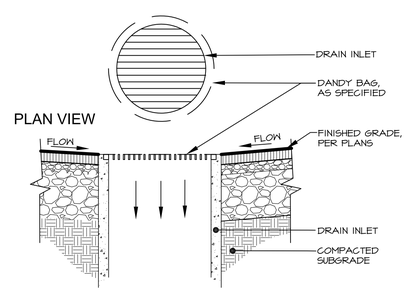

NOTES:

1. INSPECT PERIODICALLY AND REPAIR/REPLACE AS REQUIRED.
2. REMOVE SEDIMENT ACCUMULATIONS WHEN FILTER CAPACITY IS IMPAIRED.
3. OTHER METHODS OF INLET PROTECTION MAY BE APPROVED UPON REVIEW BY THE LANDSCAPE ARCHITECT.
4. PLACEMENT OF FILTER FABRIC BETWEEN GRATE AND FRAME OF THE DRAINAGE STRUCTURE WILL NOT BE ACCEPTED IN LIEU OF THE INLET FILTER.
5. SEE STATE OF IDAHO CATALOG OF STORM WATER BEST MANAGEMENT PRACTICES, BMP #25 FOR ADDITIONAL INFORMATION.

3 DRAIN INLET FILTER (TYPE 2)

Scale: 3/4"= 1'-0"

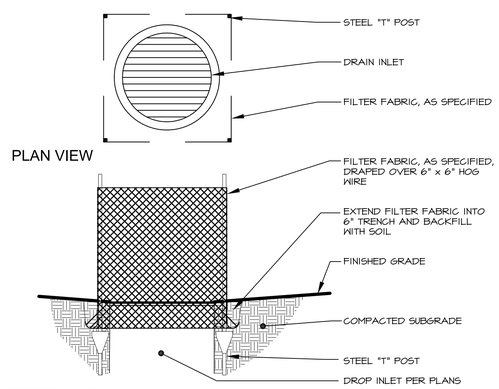

NOTES:

1. INSPECT PERIODICALLY AND REPAIR/REPLACE AS REQUIRED.
2. REMOVE SEDIMENT ACCUMULATIONS WHEN FILTER CAPACITY IS IMPAIRED.
3. OTHER METHODS OF INLET PROTECTION MAY BE APPROVED UPON REVIEW BY THE LANDSCAPE ARCHITECT.
4. PLACEMENT OF FILTER FABRIC BETWEEN GRATE AND FRAME OF THE DRAINAGE STRUCTURE WILL NOT BE ACCEPTED IN LIEU OF THE INLET FILTER.
5. SEE STATE OF IDAHO CATALOG OF STORM WATER BEST MANAGEMENT PRACTICES, BMP #25 FOR ADDITIONAL INFORMATION.

4 DRAIN INLET FILTER (TYPE 1)

Scale: 3/4"= 1'-0"

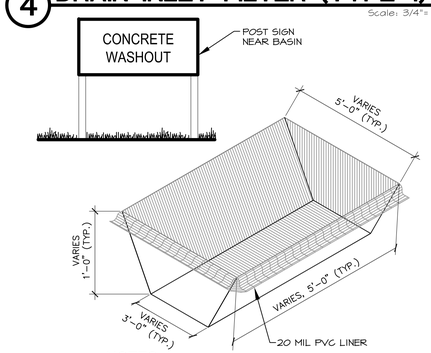

NOTES:

1. DIMENSIONS VARY. RESPONSIBLE PERSON SHALL SIZE BASIN APPROPRIATELY.

5 CONCRETE WASHOUT AREA

NOT TO SCALE

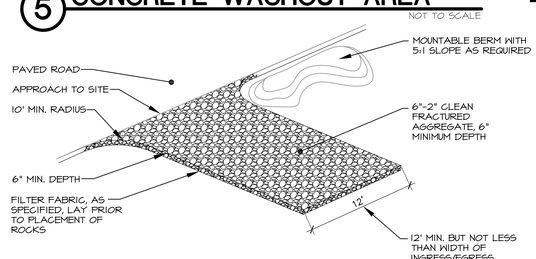

NOTE:

1. THE ARMORED APPROACH SHALL BE INSTALLED AT THE COMMENCEMENT OF SITE WORK. IT SHALL REMAIN IN PLACE UNTIL THE APPROACH AND SITE ARE PAVED.
2. MATERIAL USED SHALL CONTAIN NO FINES!
3. THIS DETAIL SHALL BE UTILIZED AT ALL APPROACHES ONTO PUBLIC ROADS.
4. APPROACHES SHALL BE MAINTAINED IN A FASHION WHICH PREVENTS SEDIMENT FROM TRACKING/FLOWING ONTO PUBLIC RIGHT-OF-WAY. ADDITIONAL ROCK SHOULD BE ADDED AS NECESSARY. ALL SEDIMENT SPILLED, DROPPED, WASHED, OR TRACKED ONTO PUBLIC RIGHT-OF-WAY SHALL BE REMOVED IMMEDIATELY.
5. ALL SURFACE WATER FLOWING/DIVERTED TOWARDS CONSTRUCTION ENTRANCES SHALL BE PIPED ACROSS THE ENTRANCE. THE USE OF A MOUNTABLE BERM HAVING 5:1 SLOPES MAY BE PERMITTED.
6. WHEELS SHALL BE CLEANED TO REMOVE SEDIMENT PRIOR TO ENTERING PUBLIC RIGHT-OF-WAY. WHEN WASHING IS REQUIRED, IT SHALL BE DONE ON AN AREA STABILIZED WITH STONE DRAINING INTO AN APPROVED SEDIMENT TRAPPING DEVICE.
7. PERIODIC INSPECTION AND NEEDED MAINTENANCE SHALL OCCUR AFTER EACH RAIN.

6 STABILIZED CONSTRUCTION ENTRY

Scale: 1/8"= 1'-0"

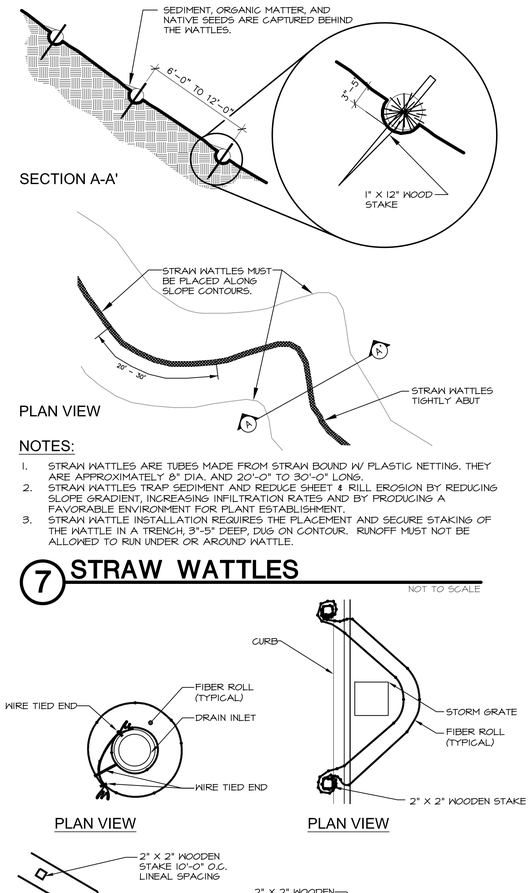

NOTES:

1. STRAW WATTLES ARE TUBES MADE FROM STRAW BOUND W/ PLASTIC NETTING. THEY ARE APPROXIMATELY 8" DIA. AND 20'-0" TO 30'-0" LONG.
2. STRAW WATTLES TRAP SEDIMENT AND REDUCE SHEET & RILL EROSION BY REDUCING SLOPE GRADIENT, INCREASING INFILTRATION RATES AND BY PRODUCING A FAVORABLE ENVIRONMENT FOR PLANT ESTABLISHMENT.
3. STRAW WATTLE INSTALLATION REQUIRES THE PLACEMENT AND SECURE STAKING OF THE WATTLE IN A TRENCH, 3"-5" DEEP, DUG ON CONTOUR. RUNOFF MUST NOT BE ALLOWED TO RUN UNDER OR AROUND WATTLE.

7 STRAW WATTLES

NOT TO SCALE

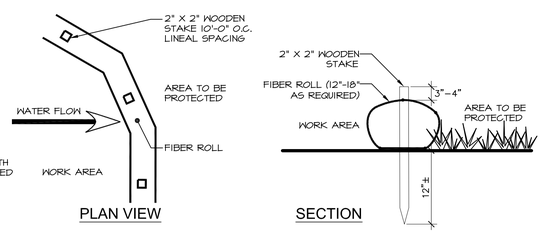

NOTE:

1. FIBER ROLL TO BE 'FILTREXX' FILTER SOXX OR APPROVED EQUAL.
2. FIBER ROLL COMPOST/SOIL/ROCK/SEED FILL TO MEET APPLICATION REQUIREMENTS
3. FIBER ROLL DEPICTED IS FOR MINIMUM SLOPES. GREATER SLOPES MAY REQUIRE LARGER SOCKS PER LANDSCAPE ARCHITECT.
4. COMPOST MATERIAL TO BE DISPERSED ON SITE, AS DETERMINED BY LANDSCAPE ARCHITECT.

8 FIBER ROLL DETAIL

NOT TO SCALE

CONTACTS

RESPONSIBLE PERSON(S):
LICENSE NO:
EXPIRES:

SIGNATURE:_____DATE:_____
COMPANY:
ADDRESS:

CITY OF BOISE
LICENSED EROSION AND SEDIMENT CONTROL
PLAN DESIGNER LICENSE NO: CON05-00359
JON BRECKON

SIGNATURE:_____DATE:_____
COMPANY: BRECKON LAND DESIGN, INC.
ADDRESS: 181 EAST 50TH STREET
GARDEN CITY, IDAHO 83714

811
Know what's below. Call before you dig.

CALL 2 BUSINESS DAYS IN ADVANCE BEFORE YOU DIG, GRADE, OR EXCAVATE FOR THE MARKING OF UNDERGROUND MEMBER UTILITIES

DRYLAND SEEDING REQUIREMENTS

General Overview

This report outlines recommended revegetation and slope stabilization measures for disturbed cut and fill slopes within the project limits as defined on the accompanying plan which will be seeded with the dryland seed mix and not irrigated. These recommendations are made to prevent short term and long term soil erosion as well as to provide an aesthetic revegetation which will blend with the existing natural surrounding area. The measures include revegetation and hydromulching procedures following topsoil distribution and fine grading. The area to be revegetated consists of all disturbed areas related to grading for construction and any other areas disturbed in the process of construction. The slopes to be affected vary widely in degree and aspect.

General Earthwork

All work shall be limited to the area required for construction with minimal, if any, disturbance to the surrounding natural slope or vegetation. All finished grades shall be smooth and rounded to ensure a natural transition between new and existing grades. Refer to grading and drainage plans for additional requirements.

Site Preparation

Earthwork process should begin with clearing large shrubs from the areas to be disturbed. Woody stems and branches shall be chipped on site to improve the amount of organic material in the top soil. Natural topsoil occurs at varying depths on the project site. The topsoil should be excavated and stockpiled at designated storage areas prior to the proposed grading operations.

Topsoil Distribution

Once the general earthwork is complete and rough grading has been accomplished, the topsoil should be redistributed over the area to minimum depths as specified. Where needed, slopes should be graded with serration to hold topsoil adequately. Topsoil should be spread and lightly compacted utilizing a small cleated tractor moving perpendicular to the contours or another method with equal capability. It is our recommendation that any necessary mechanical means of erosion control be in place prior to beginning site disturbance.

Once topsoil has been distributed and graded, revegetation seeding shall follow immediately. In order to eliminate surface crusting and to facilitate better root penetration, the surface should be scarified prior to seeding.

Seeding

Apply seed to the project site by hydroseeding or sodding.
The following information provides material and execution for seeding.

Fertile-Fiber Mulch Material

Kiwi Fertile-Fiber from 'Quattro Environmental', a composted poultry based mulch material free of growth or germination inhibiting ingredients. Apply at the rate of 2000 lbs. per acre.

Organic Soil Amendment

Kiwi Power from 'Quattro Environmental' (or approved equal) applied at 5 gallons per acre.

Tackifier

Mulch tackifier soil stabilizer – Ecology controls M-Binder. Tackifier applied at the rate of 80 lbs. per acre.
Granite Seed
1697 West 2100 North
P.O. Box 177
Lehi, Utah 84043
1-800-768-4433
(or approved equal)

Hydroseeding

Mix specified seed and organic soil amendment in water per manufacturer's recommendations. Apply seeded slurry evenly in two intersection directions. Do not hydroseed area in excess of that which can be mulched on same day. Keep off roads, walks, structures and areas not to be seeded. Clean up these areas. After hydroseed, track in seed using a cleated crawler with track marks perpendicular to the slope. After tracked, mulch slope with 2000 lbs. per acre of fertile-fiber mulch material and 80 lbs. per acre of tackifier.

Maintenance

Immediately reseed areas which show bare spots. Minimum acceptable plant coverage is 80 percent after one growing season. Protect seeded areas with waning signs during maintenance period. The seed will require approximately ninety (90) days of favorable growing conditions to germinate and become established for successful survival with normal minimal summer precipitation.

Seeding Time

The optimal seeding time shall be in fall, between mid September and mid October. If seeding is applied too early or too late and proper germination is not realized prior to fall dormancy, then reseeding shall be applied in early spring, as soon as soil is workable (not muddy) between March and mid May. This planting time provides the optimum weather conditions for seed germination and seedling survival rate. Seeding after November 20, 'dormant seeding' insures that the seed does not germinate prior to freezing winter temperatures and seed should be in place for the early spring rains.

Water

The contractor will provide supplemental water to ensure proper seed germination.

Fertilization

Fertilization is not recommended for reclamation seeding due to promotion of weed competition. If weeds are apparent, contact landscape architect for weed removal requirements.

Erosion Control

Under normal circumstances and adherence to the construction practices described in the specifications, the above recommended erosion control measure should provide a stable slope condition. To avoid incidental erosion, it is imperative that the slopes, once prepared, remain undisturbed until seeding germinates and is established.

An 80% vegetation cover is recommended to control erosion. Surface conditions should be monitored daily. If erosion detrimental to the slope is observed or anticipated due to excessive rainfall, remedial measures shall be implemented as required. Refer to the Storm Water Pollution Prevention Plan for additional requirements.

DISTURBED AREAS

GENERAL OVERVIEW

THIS REPORT OUTLINES RECOMMENDED REVEGETATION AND SLOPE STABILIZATION MEASURES FOR DISTURBED CUT AND FILL SLOPES WITHIN THE PROJECT LIMITS AS DEFINED ON THE ACCOMPANYING PLAN. THESE RECOMMENDATIONS ARE MADE TO PREVENT SHORT TERM AND LONG TERM SOIL EROSION AS WELL AS TO PROVIDE AN AESTHETIC REVEGETATION WHICH WILL BLEND WITH THE EXISTING NATURAL SURROUNDING AREA. THE AREA TO BE REVEGETATED CONSISTS OF DISTURBED AREAS RELATED TO GRADING FOR THE NEW GARAGE AND LANDSCAPE PLANTINGS AND ANY OTHER AREAS DISTURBED IN THE PROCESS OF CONSTRUCTION. THE SLOPES TO BE AFFECTED SLOPE AWAY FROM THE RESIDENCE . THE EXISTING VEGETATION CONSISTS PRIMARILY OF TREES AND TURF AND LANDSCAPE AREAS TO BE REMEDIED.

GENERAL EARTHWORK

ALL WORK SHALL BE LIMITED TO THE AREA REQUIRED FOR CONSTRUCTION WITH MINIMAL, IF ANY, DISTURBANCE TO THE SURROUNDING NATURAL SLOPE OR VEGETATION. ALL FINISHED GRADES SHALL BE SMOOTH AND ROUNDED TO ENSURE A NATURAL TRANSITION BETWEEN NEW AND EXISTING GRADES.

SITE PREPARATION

EARTHWORK PROCESS SHOULD BEGIN WITH CONSTRUCTION OF THE TEMPORARY ACCESS RAMP FOR ACCESS TO THE LOWER BACK YARD. NATURAL TOPSOIL OCCURS AT VARYING DEPTHS ON THE PROJECT SITE. THE TOPSOIL SHOULD BE EXCAVATED AND STOCKPILED AT DESIGNATED STORAGE AREAS PRIOR TO THE PROPOSED LANDSCAPING.

TOPSOIL DISTRIBUTION

ONCE THE GENERAL HARDSCAPE AREAS ARE COMPLETED AND ROUGH GRADING HAS BEEN ACCOMPLISHED, THE TOPSOIL SHOULD BE REDISTRIBUTED OVER THE AREA TO A MINIMUM DEPTH OF SIX (6) INCHES, OR AS ALLOWED BY AVAILABILITY OF ON-SITE TOPSOIL. WHERE NEEDED, SLOPES SHOULD BE GRADED WITH SERRATION TO HOLD TOPSOIL ADEQUATELY. TOPSOIL SHOULD BE SPREAD AND LIGHTLY COMPACTED UTILIZING A SMALL CLEATED TRACTOR MOVING PERPENDICULAR TO THE CONTOURS OR ANOTHER METHOD WITH EQUAL CAPABILITY. IT IS OUR RECOMMENDATION THAT ANY NECESSARY MECHANICAL MEANS OF EROSION CONTROL BE IN PLACE PRIOR TO BEGINNING SITE DISTURBANCE. REFER TO THE EROSION AND SEDIMENT CONTROL PLAN FOR ADDITIONAL INFORMATION AND REQUIREMENTS.

ONCE TOPSOIL HAS BEEN DISTRIBUTED AND GRADED, NEW SOD, LANDSCAPE PLANTING AND MULCH SHALL BE INSTALLED INITIALLY TO REDUCE THE POSSIBLE AMOUNT OF EROSION.

EROSION CONTROL

UNDER NORMAL CIRCUMSTANCES AND ADHERENCE TO THE CONSTRUCTION PRACTICES DESCRIBED IN THE PLANS, THE ABOVE RECOMMENDED EROSION CONTROL MEASURE SHOULD PROVIDE A STABLE SLOPE CONDITION. TO AVOID INCIDENTAL EROSION, IT IS IMPERATIVE THAT THE SLOPES, ONCE PREPARED, REMAIN UNDISTURBED UNTIL NEW LANDSCAPING (SOD AND/OR SHRUBS AND MULCH) ARE INSTALLED AND ESTABLISHED.

AN 80% VEGETATION COVER IS RECOMMENDED TO CONTROL EROSION. SURFACE CONDITIONS SHOULD BE MONITORED DAILY. IF EROSION DETRIMENTAL TO THE SLOPE IS OBSERVED OR ANTICIPATED DUE TO EXCESSIVE RAINFALL, REMEDIAL MEASURES SHALL BE IMPLEMENTED AS REQUIRED.

ARCHITECT:

COLE ARCHITECTS

COLE ARCHITECTS | 802 W. BANNOCK SUIT 208
Boise, ID 83702 | (208) 345-1800

TCA architecture • planning
TCA | 6211 Roosevelt Way NE
Seattle, WA 98115 | (206) 522-3820

STAMP:

STATE OF IDAHO
JON S. BRECKON
LANDSCAPE ARCHITECT

NOT FOR CONSTRUCTION

CONSULTANT:

BRECKON landdesign
• Landscape Architecture
• Erosion & Sediment Control
• Geographic Info Systems
• Graphic Communication
• Water Management
• Irrigation Design
• Land Planning
www.breckonlanddesign.com
Fax: 208-376-6528
Phone: 208-376-5153
181 East 50th Street
Garden City, Idaho 83714

PROJECT INFORMATION:

BOISE CITY OF TREES

BOISE FIRE EST. 1891 DEDICATION

City of Boise Fire Station 4

8485 W. Ustick Rd. Boise, ID 83704

REVISIONS:

MARK	DATE	DESCRIPTION

PROJECT PHASE	Project Status
PROJECT NUMBER	15043
PROJECT MANAGER	R. TeBeau
PROJECT ARCHITECT	R. TeBeau
DESIGN	JB
DRAWN BY	JB, LP, JR, BS

SHEET NAME:

EROSION AND SEDIMENT CONTROL DETAILS

SHEET NUMBER:

ESC1.65

1.29.16

S:_projects\2015\15043 boise fire #4\CAD\15043 160 esc04.dwg plotted by user01 on Mon, February 1 2016 at 05:47 PM

LANDSCAPE NOTES:

1. CONTRACTOR SHALL REPORT TO LANDSCAPE ARCHITECT ALL CONDITIONS WHICH IMPAIR AND/OR PREVENT THE PROPER EXECUTION OF THIS WORK, PRIOR TO BEGINNING WORK.
2. NO MATERIAL SUBSTITUTIONS SHALL BE MADE WITHOUT THE LANDSCAPE ARCHITECT'S PRIOR WRITTEN APPROVAL. ALTERNATE MATERIALS OF SIMILAR SIZE AND CHARACTER MAY BE CONSIDERED IF SPECIFIED PLANT MATERIALS CAN NOT BE OBTAINED.
3. COORDINATE ALL WORK WITH ALL OTHER SITE RELATED DEVELOPMENT DRAWINGS.
4. COORDINATE WORK SCHEDULE AND OBSERVATIONS WITH LANDSCAPE ARCHITECT PRIOR TO CONSTRUCTION START-UP.
5. ALL PLANT MATERIAL SHALL BE INSTALLED AS PER DETAILS.
6. ALL PLANT MATERIAL SHALL CONFORM TO THE AMERICAN NURSERYMAN STANDARDS FOR TYPE AND SIZE SHOWN. PLANTS WILL BE REJECTED IF NOT IN A SOUND AND HEALTHY CONDITION.
7. IN THE EVENT OF A PLANT COUNT DISCREPANCY, PLANT SYMBOLS SHALL OVERRIDE SCHEDULE QUANTITIES AND CALL OUT SYMBOL NUMBERS.
8. ALL PLANTING BEDS SHALL BE COVERED WITH A MINIMUM OF 3" DEPTH OF CRUSHED SANDSTONE MULCH. APPLY A PRE-EMERGENT HERBICIDE PRIOR TO MULCH APPLICATION. SUBMIT SAMPLE FOR APPROVAL.
9. ALL PLANT MATERIAL SHALL BE GUARANTEED FOR A PERIOD OF ONE YEARS BEGINNING AT THE DATE OF ACCEPTANCE BY THE OWNER. REPLACE ALL PLANT MATERIAL FOUND DEAD OR NOT IN A HEALTHY CONDITION IMMEDIATELY WITH THE SAME SIZE AND SPECIES AT NO COST TO THE OWNER.
10. FINISH GRADES SHALL PROVIDE A SMOOTH TRANSITION WITH ADJACENT SURFACES AND ENSURE POSITIVE DRAINAGE IN ACCORDANCE WITH THE SITE GRADING PLAN.
11. AMEND EXISTING APPROVED TOPSOIL AT A RATIO OF THREE CUBIC YARDS OF APPROVED COMPOST PER 1000 SQUARE FEET. ROTO-TILL ORGANIC MATTER A MINIMUM OF 6 INCHES INTO TOPSOIL.
12. FERTILIZE ALL TREES AND SHRUBS WITH 'AGRIFORM' PLANTING TABLETS. QUANTITY PER MANUFACTURER'S RECOMMENDATIONS.
13. ALL PLANTING BEDS SHALL HAVE A MINIMUM 18" DEPTH OF TOPSOIL. LAWN AREAS SHALL HAVE A MINIMUM 12" DEPTH OF TOPSOIL. SPREAD, COMPACT, AND FINE GRADE TOPSOIL TO A SMOOTH AND UNIFORM GRADE 3" BELOW ADJACENT SURFACES OF PLANTER BED AREAS, 1-1/2" BELOW ADJACENT SURFACES OF TURF SOD AREAS, AND 1" BELOW ADJACENT SURFACES OF TURF SEED AREAS.
14. REUSE EXISTING TOPSOIL STOCKPILED ON THE SITE. SUPPLEMENT WITH IMPORTED TOPSOIL WHEN QUANTITIES ARE INSUFFICIENT. VERIFY SUITABILITY AND CONDITION OF TOPSOIL AS A GROWING MEDIUM. PERFORM SOIL TEST/ ANALYSIS AND PROVIDE ADDITIONAL AMENDMENT AS DETERMINED BY SOIL TESTS. TOPSOIL SHALL BE A LOOSE, FRIABLE, SANDY LOAM, CLEAN AND FREE OF TOXIC MATERIALS, NOXIOUS WEEDS, WEED SEEDS, ROCKS, GRASS OR OTHER FOREIGN MATERIAL AND A HAVE A PH OF 5.5 TO 7.0. IF ONSITE TOPSOIL DOES NOT MEET THESE MINIMUM STANDARDS, CONTRACTOR IS RESPONSIBLE TO EITHER:
    A) PROVIDE APPROVED IMPORTED TOPSOIL, OR
    B) IMPROVE ON-SITE TOPSOIL WITH METHODS APPROVED BY THE LANDSCAPE ARCHITECT.
15. IF IMPORTED TOPSOIL FROM OFF-SITE SOURCES IS REQUIRED, ENSURE IT IS FERTILE, FRIABLE, NATURAL LOAM, SURFACE SOIL, REASONABLY FREE OF SUBSOIL, CLAY LUMPS, BRUSH, WEEDS AND OTHER LITTER, AND FREE OF ROOTS, STUMPS, STONES LARGER THAN 2 INCHES IN ANY DIMENSION, AND OTHER EXTRANEOUS OR TOXIC MATTER HARMFUL TO PLANT GROWTH.
    A) OBTAIN TOPSOIL FROM LOCAL SOURCES OR FROM AREAS HAVING SIMILAR SOIL CHARACTERISTICS TO THOSE FOUND ON THE PROJECT SITE. OBTAIN TOPSOIL ONLY FROM NATURALLY, WELL-DRAINED SITES WHERE TOPSOIL OCCURS AT A DEPTH OF NOT LESS THAN 4 INCHES.
    B) REPRESENTATIVE SAMPLES SHALL BE TESTED FOR ACIDITY, FERTILITY, TOXICITY, AND GENERAL TEXTURE BY A RECOGNIZED COMMERCIAL OR GOVERNMENT AGENCY AND COPIES OF THE TESTING AGENCY'S FINDINGS AND RECOMMENDATIONS SHALL BE FURNISHED TO THE OWNER'S REPRESENTATIVE BY THE CONTRACTOR. NO TOPSOIL SHALL BE DELIVERED IN A FROZEN OR MUDDY CONDITION. ACIDITY/ALKALINITY RANGE - PH. 5.5 TO 7.6.
16. IMMEDIATELY CLEAN UP ANY TOPSOIL OR OTHER DEBRIS ON THE SITE CREATED FROM LANDSCAPE OPERATIONS AND DISPOSE OF PROPERLY OFF SITE.
17. TREES SHALL NOT BE PLANTED WITHIN THE 10'-0" CLEAR ZONE OF ALL A.C.H.D. STORM DRAIN PIPE, STRUCTURES, OR FACILITIES. TREES SHALL NOT BE PLANTED WITHIN 5'-0" OF AN A.C.H.D. SIDEWALK.
18. SEEPAGE BEDS AND OTHER STORM DRAINAGE FACILITIES MUST BE PROTECTED FROM ANY AND ALL CONTAMINATION DURING THE CONSTRUCTION AND INSTALLATION OF THE LANDSCAPE IRRIGATION SYSTEM.
19. IN THE EVENT OF A DISCREPANCY, NOTIFY THE LANDSCAPE ARCHITECT IMMEDIATELY.

TOPSOIL NOTES

1. TOPSOIL REQUIREMENTS: ASTM D 5268, PH RANGE OF 5.5 TO 7, FOUR PERCENT ORGANIC MATERIAL MINIMUM, FREE OF STONES 1/2 INCH OR LARGER IN ANY DIMENSION, AND OTHER EXTRANEOUS MATERIALS HARMFUL TO PLANT GROWTH.
2. TOPSOIL SOURCE: STRIP EXISTING TOPSOIL FROM ALL AREAS OF THE SITE TO BE DISTURBED. TOPSOIL SHALL BE FERTILE, FRIABLE, NATURAL LOAM, SURFACE SOIL, REASONABLY FREE OF SUBSOIL, CLAY LUMPS, BRUSH, WEEDS AND OTHER LITTER, AND FREE OF ROOTS, STUMPS, ORGANIC MATTER LARGER THAN 2 INCHES IN ANY DIMENSION, AND OTHER EXTRANEOUS OR TOXIC MATTER HARMFUL TO PLANT GROWTH. TOPSOIL SHALL BE SCREENED TO ACHIEVE THIS REQUIREMENT.
3. REPRESENTATIVE SAMPLES SHALL BE TESTED FOR ACIDITY, FERTILITY AND GENERAL TEXTURE BY A RECOGNIZED COMMERCIAL OR GOVERNMENT AGENCY AND COPIES OF THE TESTING AGENCY'S FINDINGS AND RECOMMENDATIONS SHALL BE FURNISHED TO THE ARCHITECT'S REPRESENTATIVE BY THE CONTRACTOR. ALL TOPSOIL SHALL BE AMENDED TO ACHIEVE SPECIFIED PH AND ORGANIC REQUIREMENTS. RE-TEST TOPSOIL PRIOR TO FINAL COMPLETION TO ENSURE REQUIREMENTS HAVE BEEN MET. NO TOPSOIL SHALL BE PLACED WHILE IN A FROZEN OR MUDDY CONDITION.
4. PLACE TOPSOIL IN AREAS WHERE REQUIRED TO OBTAIN THICKNESS AS SCHEDULED. PLACE TOPSOIL DURING DRY WEATHER. PROVIDE ADDITIONAL IMPORTED TOPSOIL REQUIRED TO BRING SURFACE TO PROPOSED FINISH GRADE, AS REQUIRED.
5. COMPACTED TOPSOIL THICKNESS AT THE FOLLOWING AREAS:
    A. LAWN AREAS: 4 INCHES MINIMUM OR AS NECESSARY TO ACHIEVE EVEN GRADES WITH SURROUNDING LAWN AREAS.
    B. PLANTER BEDS: 18 INCHES MINIMUM
6. FINE GRADE TOPSOIL TO SMOOTH, EVEN SURFACE WITH LOOSE, UNIFORMLY FINE TEXTURE. REMOVE RIDGES AND FILL DEPRESSIONS, AS REQUIRED TO MEET FINISH GRADES. FINISH GRADE OF TOPSOIL SHALL BE 2" BELOW FINISH GRADE OF PAVEMENTS AREAS FOR SOD AND 1" FOR SEED.
7. TOPSOIL STOCKPILE LOCATIONS TO BE COVERED COORDINATE WITH EROSION AND SEDIMENT CONTROL PLAN.
8. ALL GRAVEL, SUBBASE, AND OTHER IMPORTED FILL MATERIALS OTHER THAN TOPSOIL SHALL ONLY BE STOCKPILED IN PROPOSED IMPERVIOUS AREAS. NO GRAVEL OR ROCK MATERIALS SHALL BE STOCKPILED OR TEMPORARILY PLACED IN PROPOSED LANDSCAPE AREAS TO PREVENT LANDSCAPE AREAS FROM BEING CONTAMINATED WITH ROCK MATERIALS. CONTRACTOR SHALL SUBMIT A DETAILED STOCKPILE PLAN TO LANDSCAPE ARCHITECT AND OWNER FOR APPROVAL PRIOR TO ANY EARTHWORK OPERATIONS.

LANDSCAPE AREA PREPARATION NOTES:

1. LIMIT TURF SUBGRADE PREPARATION TO AREAS TO BE PLANTED.
2. NEWLY GRADED SUBGRADES: LOOSEN SUBGRADE TO A MINIMUM DEPTH OF 4 INCHES. REMOVE STONES LARGER THAN 1 INCH IN ANY DIMENSION AND STICKS, ROOTS, RUBBISH, AND OTHER EXTRANEOUS MATTER AND LEGALLY DISPOSE OF THEM OFF OWNER'S PROPERTY.
    A. SPREAD PLANTING SOIL TO A DEPTH OF 9 INCHES IN TURF AREAS AND 18 INCHES AT SHRUB BED AREAS BUT NOT LESS THAN REQUIRED TO MEET FINISH GRADES AFTER LIGHT ROLLING AND NATURAL SETTLEMENT. DO NOT SPREAD IF PLANTING SOIL OR SUBGRADE IS FROZEN, MUDDY, OR EXCESSIVELY WET.
    B. SPREAD PLANTING SOIL OVER LOOSENED SUBGRADE.
    C. REDUCE ELEVATION OF PLANTING SOIL TO ALLOW FOR SOIL THICKNESS OF SOD OR SEED.
3. UNCHANGED SUBGRADES: IF TURF IS TO BE PLANTED IN AREAS UNALTERED OR UNDISTURBED BY EXCAVATING, GRADING, OR SURFACE-SOIL STRIPPING OPERATIONS, PREPARE SURFACE SOIL AS FOLLOWS:
    A. REMOVE EXISTING GRASS, VEGETATION, AND TURF. DO NOT MIX INTO SURFACE SOIL.
    B. LOOSEN SURFACE SOIL TO A DEPTH OF AT LEAST 6 INCHES. PROVIDE WEED ABATEMENT PROCEDURE. APPLY SOIL AMENDMENTS AND FERTILIZERS ACCORDING TO PLANTING SOIL MIX PROPORTIONS AND MIX THOROUGHLY INTO TOP 6 INCHES OF SOIL. TILL SOIL TO A HOMOGENEOUS MIXTURE OF FINE TEXTURE.
    C. APPLY SOIL AMENDMENTS DIRECTLY TO SURFACE SOIL BEFORE LOOSENING.
    D. REMOVE STONES LARGER THAN 1 INCH IN ANY DIMENSION AND STICKS, ROOTS, TRASH, AND OTHER EXTRANEOUS MATTER.
    E. LEGALLY DISPOSE OF WASTE MATERIAL, INCLUDING GRASS, VEGETATION, AND TURF, OFF OWNER'S PROPERTY.
4. FINISH GRADING: GRADE PLANTING AREAS TO A SMOOTH, UNIFORM SURFACE PLANE WITH LOOSE, UNIFORMLY FINE TEXTURE. GRADE TO WITHIN PLUS OR MINUS 1/2 INCH OF FINISH ELEVATION. ROLL AND RAKE, REMOVE RIDGES, AND FILL DEPRESSIONS TO MEET FINISH GRADES. LIMIT FINISH GRADING TO AREAS THAT CAN BE PLANTED IN THE IMMEDIATE FUTURE.
5. MOISTEN PREPARED AREA BEFORE PLANTING IF SOIL IS DRY. WATER THOROUGHLY AND ALLOW SURFACE TO DRY BEFORE PLANTING. DO NOT CREATE MUDDY SOIL.
6. BEFORE PLANTING, OBTAIN LANDSCAPE ARCHITECT'S ACCEPTANCE OF FINISH GRADING; RESTORE PLANTING AREAS IF ERODED OR OTHERWISE DISTURBED AFTER FINISH GRADING.
7. DO NOT SOW IMMEDIATELY FOLLOWING RAIN, OR WHEN GROUND IS TOO DRY. TEMPERATURE SHALL BE BETWEEN 55 F AND 95 F FOR A 24 HOUR PERIOD. WIND SHALL BE LESS THAN 5 MPH.

WEED ABATEMENT NOTES:

1. ALL AREAS TO BE PLANTED OR HYDROSEEDED SHALL HAVE WEED ABATEMENT OPERATIONS PERFORMED ON THEM PRIOR TO PLANTING OR HYDROSEEDING.
2. CONTRACTOR SHALL SPRAY ALL EXPOSED WEEDS WITH ©ROUND-UP® (CONTACT HERBICIDE) OR APPROVED EQUAL.
3. DO NOT WATER FOR AT LEAST SEVEN (7) DAYS. REMOVE EXPOSED WEEDS FROM THE SITE.
4. CONTRACTOR SHALL OPERATE THE AUTOMATIC IRRIGATION SYSTEM FOR A PERIOD OF FOURTEEN (14) DAYS. AT CONCLUSION OF THIS WATERING PERIOD, DISCONTINUE WATERING FOR THREE TO FIVE (3-5) DAYS.
5. APPLY SECOND APPLICATION OF ©ROUND-UP® TO ALL EXPOSED WEEDS. APPLY IN STRICT CONFORMANCE WITH MANUFACTURER'S SPECIFICATIONS AND INSTRUCTIONS. DO NOT WATER FOR AT LEAST SEVEN (7) DAYS. REMOVE WEEDS FROM THE SITE.
6. IF ANY EVIDENCE OF WEED GERMINATION EXISTS AFTER TWO (2) APPLICATIONS, CONTRACTOR SHALL BE DIRECTED TO PERFORM A THIRD APPLICATION.
7. AT THE TIME OF PLANTING AND HYDROSEEDING, ALL PLANTING AREAS SHALL BE WEED FREE.

TREE MITIGATION NOTES:

1. THE LANDSCAPE ARCHITECT WILL MEET WITH THE CITY ARBORIST TO ESTABLISH MITIGATION REQUIREMENTS FOR REMOVAL OF EXISTING TREES.

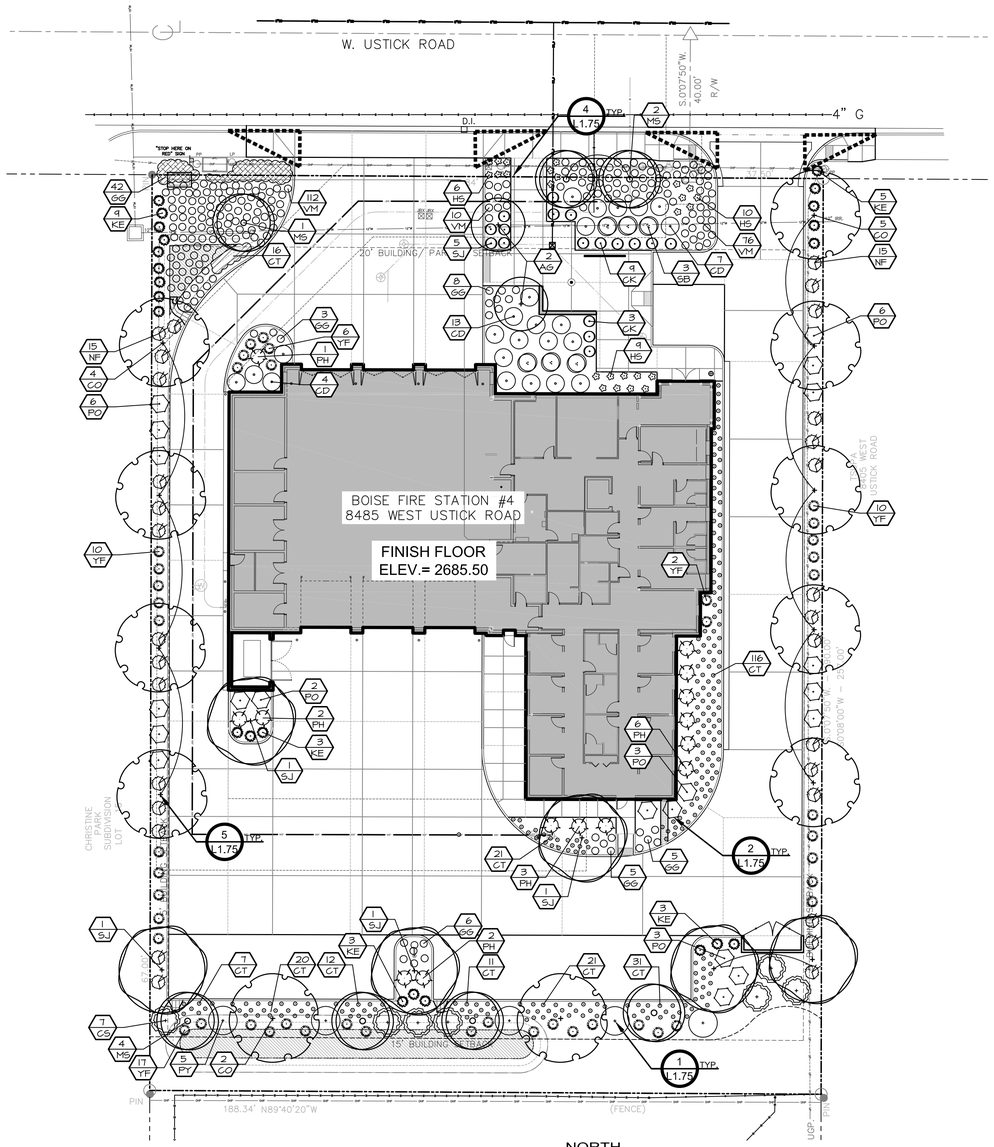

1 LANDSCAPE PLAN

SCALE: 1" = 20' - 0"

PLANT SCHEDULE

QTY.	KEY	BOTANICAL NAME	COMMON NAME	SIZE	NOTES	CLASS	MATURE
DECIDUOUS SHADE TREES							
11	CO	Celtis occidentalis	Common Hackberry	2" CAL. B&B	Drought Tolerant	II	40'x40'
6	SJ	Sophora japonica	Japanese Pagoda Tree	2" CAL. B&B	Drought Tolerant	II	45'x40'
ORNAMENTAL FLOWERING TREES							
1	AG	Acer ginnala 'Flame'	Flame Amur Maple	2" CAL. B&B	Drought Tolerant/Firewise	I	20'x20'
8	MS	Malus x 'Spring Snow'	Spring Snow Crabapple	2" CAL. B&B	Drought Tolerant/Firewise	I	28'x20'
SHRUBS/PERENNIALS/ORNAMENTAL GRASSES/GROUND COVERS							
26	CD	Cotoneaster dammeri 'Streibs Findling'	Streibs Findling Cotoneaster	#1	Firewise		5'x6'
12	CK	Cornus sericea 'Kelsey'	Kelsey Dogwood	#2	Firewise		2'x2'
271	CT	Cerastium tomentosum	Snow-in-Summer	4" POTS	Drought Tolerant		5'x1'
7	CS	Cornus sericea	Red Osier Dogwood	#2	Drought Tolerant		8'x10'
66	GG	Gaillardia grandiflora 'Goblin'	Goblin Blanket Flower	4" POTS	Drought Tolerant/Firewise		2'x2'
15	HS	Hemerocallis 'Stella de Oro'	Stella de Oro Daylily	4" POTS	Firewise		2'x2'
23	KE	Kniphofia 'Echo Rojo'	Echo Rojo Red Hot Poker	4" POTS	Drought Tolerant		2'X2'
30	NF	Nepeta x faassenii 'Walker's Low'	Walker's Low Catmint	4" POTS	Drought Tolerant		3'x3'
20	PH	Philadelphus x virginalis 'Snowflake'	Dwarf Snowflake Mock Orange	#2	Drought Tolerant		4'x4'
21	PO	Physocarpus opulifolius 'Dart's Gold'	Dart's Gold Ninebark	#5	Drought Tolerant		5'x5'
7	PY	Physocarpus opulifolius 'Diabolo'	Diabolo Ninebark	#5	Drought Tolerant		8'x8'
9	SB	Spiraea x bumalda 'Anthony Waterer'	Anthony Waterer Spirea	#2	Firewise		4'x4'
198	VM	Vinca minor 'Bowles'	Bowles' Common Periwinkle	4" POTS	Firewise		5'x6'
45	YF	Yucca filamentosa 'Color Guard'	Color Guard Adam's Needle	#2	Drought Tolerant		4'x4'

811 Know what's below. Call before you dig.

CALL 2 BUSINESS DAYS IN ADVANCE BEFORE YOU DIG, GRADE, OR EXCAVATE FOR THE MARKING OF UNDERGROUND MEMBER UTILITIES

LANDSCAPE LEGEND

- PLANTS TO BE INSTALLED
- SITE TRIANGLE
- PROPERTY LINE (VERIFY)
- SIGN LOCATION
- BIKE RACK AS SPECIFIED
- 10 / JB — QUANTITY / PLANT IDENTIFICATION KEY
- PROPOSED BUILDING

LANDSCAPE REQUIREMENTS

1. NORTH BOUNDARY
   187.57' LIN. FT.
   TREES REQUIRED:5
   TREES PROVIDED:5
2. WEST BOUNDARY
   255.97' LIN. FT. TOTAL
   TREES REQUIRED:6
   TREES PROVIDED:6
3. SOUTH BOUNDARY
   187.64' LIN. FT. TOTAL
   TREES REQUIRED:5
   TREES PROVIDED:7
4. EAST BOUNDARY
   255.97' LIN. FT TOTAL
   TREES REQUIRED:6
   TREES PROVIDED:6

TOTAL LINEAL FEET OF STREET FRONTAGE: 187.57'
TOTAL NUMBER OF STREET TREES:21
TOTAL NUMBER OF TREES:27
TOTAL NUMBER OF TREE SPECIES:4

SITE DATA

TOTAL SITE AREA	48,284 S.F. (1.12 acres)
BUILDING S.F.	11,513 S.F.
BUILDING COVERAGE	24%
HARD SURFACE AREA	26,173 S.F.
HARD SURFACE COVERAGE	54%
LANDSCAPE AREA	10,603 S.F.
LANDSCAPE COVERAGE	22%
PARKING SPACES	17 STALLS

OPEN SPACE DESIGN REQUIREMENTS

	REQUIRED:	PROVIDED:
SITE GREATER THAN 1 ACRE IN SIZE: PEDESTRIAN-ORIENTED SPACE AT LEAST 1% OF NET PROJECT AREA + AT LEAST 1% OF THE GROSS NON-RESIDENTIAL BUILDING FLOOR AREA (1% NET PROJECT AREA + 1% GROSS BUILDING AREA)	48,021 SF = 1.1 ac. (48,021 SF)X(0.01) =480 (11,563)X(0.01) = 116 480 + 1156 = 596 SF	1,450 SF
THREE FEET (3') OF SEATING AREA OR ONE INDIVIDUAL SEAT PER 60 SQUARE FEET OF PLAZA AREA/OPEN SPACE	3' OF BENCH SEATING	12' OF BENCH SEATING

ARCHITECT:

COLE ARCHITECTS

COLE ARCHITECTS | 802 W. BANNOCK SUIT 208
Boise, ID 83702 | (208) 345-1800

TCA architecture • planning

TCA | 6211 Roosevelt Way NE
Seattle, WA 98115 | (206) 522-3820

STAMP:

STATE OF IDAHO — JOHN LANDSCAPE ARCHITECT

NOT FOR CONSTRUCTION

CONSULTANT:

BRECKON landdesign

- Landscape Architecture
- Erosion & Sediment Control
- Geographic Info Systems
- Graphic Communication
- Water Management
- Irrigation Design
- Land Planning

www.breckonlanddesign.com
Fax: 208-376-6528
Phone: 208-376-5153
181 East 50th Street
Garden City, Idaho 83714

PROJECT INFORMATION:

BOISE CITY OF TREES

BOISE FIRE Est. 1891 DEDICATION

City of Boise Fire Station 4

8485 W. Ustick Rd. Boise, ID 83704

REVISIONS:

MARK	DATE	DESCRIPTION

PROJECT PHASE	Project Status
PROJECT NUMBER	15043
PROJECT MANAGER	R. TeBeau
PROJECT ARCHITECT	R. TeBeau
DESIGN	JB
DRAWN BY	JB, LP, JR, BS

SHEET NAME:

LANDSCAPE PLAN

SHEET NUMBER:

L1.70

1.29.16

S:_projects\2015\15043 boise fire #4\CAD\15043 170 landl.dwg plotted by: user01 on Mon, February 1 2016 at 05:49 PM

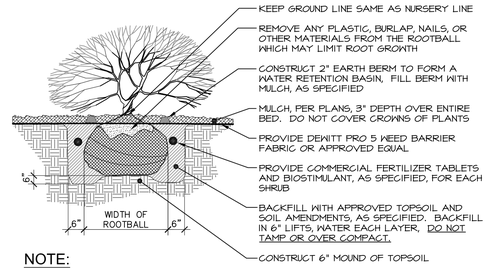

NOTE:

1. WATER SHRUB TWICE WITHIN FIRST 24 HOURS.
2. APPLY SPECIFIED PRE-EMERGENT PER MANUFACTURER'S RECOMMENDATIONS TO ALL GROUNDCOVER BEDS.

1 SHRUB PLANTING

NOT TO SCALE

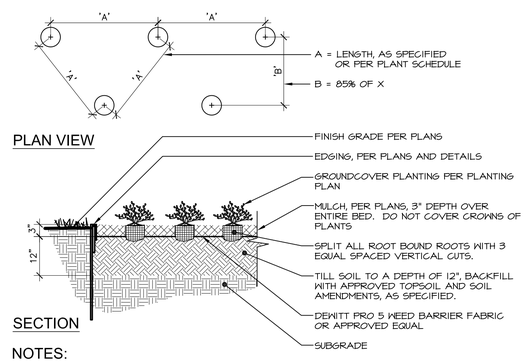

NOTES:

1. ALL GROUNDCOVER PLANTS TO BE PLANTED ON CENTER AND IN A TRIANGULAR PATTERN.
2. APPLY SPECIFIED PRE-EMERGENT PER MANUFACTURER'S RECOMMENDATIONS TO ALL GROUNDCOVER BEDS.

2 PERENNIAL & GROUNDCOVER PLANTING

NOT TO SCALE

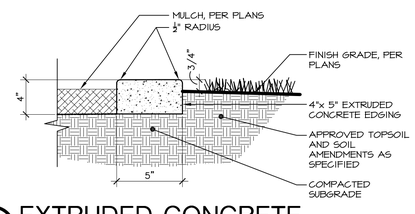

3 EXTRUDED CONCRETE EDGING

NOT TO SCALE

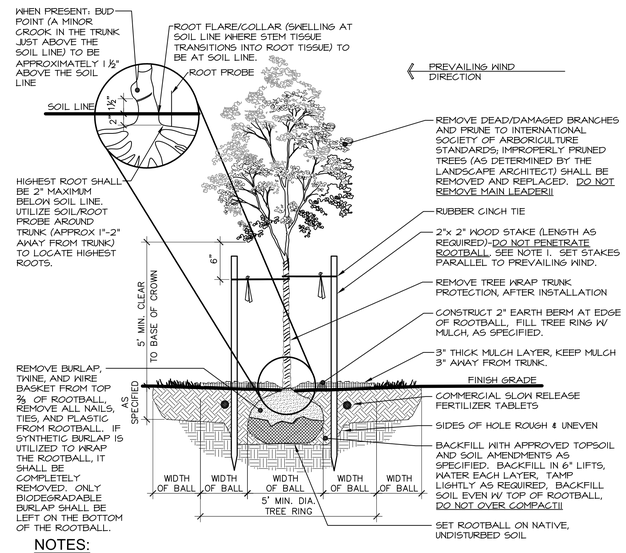

NOTES:

1. THE STAKING OF TREES IS TO BE THE CONTRACTOR'S OPTION; HOWEVER, THE CONTRACTOR IS RESPONSIBLE TO INSURE THAT ALL TREES ARE PLANTED STRAIGHT AND THAT THEY REMAIN STRAIGHT FOR LENGTH OF WARRANTY PERIOD OR 1 YEAR AFTER SUBSTANTIAL COMPLETION WHICHEVER IS GREATER. ALL STAKING SHALL BE REMOVED AT THE END OF THE WARRANTY PERIOD.
2. IN THE EVENT OF A QUESTION OR LACK OF CLARITY ON THE DRAWINGS, THE CONTRACTOR IS TO NOTIFY THE LANDSCAPE ARCHITECT BEFORE PROCEEDING.
3. LANDSCAPE CONTRACTOR IS TO NOTIFY THE LANDSCAPE ARCHITECT AND OWNER PRIOR TO INSTALLATION OF PLANT MATERIAL.
4. WRAP RUBBER CINCH TIES AROUND THE TREE TRUNKS AND STAKES USING EITHER THE STANDARD OR FIGURE EIGHT TYING METHOD. SECURE THE TIES TO THE STAKES WITH GALVANIZED NAILS TO PREVENT SLIPPAGE.
5. WATER TREE TWICE WITHIN THE FIRST 24 HOURS.
6. IN THE EVENT HARDPAN SOILS PREVENT TREE PLANTING AS DETAILED, NOTIFY THE LANDSCAPE ARCHITECT IMMEDIATELY.
7. FOR TREES LOCATED WITHIN ROADSIDE PLANTERS LESS THAN 8'-0" IN WIDTH, PROVIDE TREE ROOT BARRIER (DEEPROOT #24-2 OR APPROVED EQUAL). LOCATE ROOT BARRIER AT BACK OF CURB AND EDGE OF SIDEWALK. ALL TREE INSTALLATIONS SHALL CONFORM TO ALL AGENCY APPROVAL REQUIREMENTS, CONTRACTOR SHALL VERIFY PRIOR TO ANY INSTALLATIONS.

4 DECIDUOUS TREE PLANTING

NOT TO SCALE

811
Know what's below. Call before you dig.
CALL 2 BUSINESS DAYS IN ADVANCE BEFORE YOU DIG, GRADE, OR EXCAVATE FOR THE MARKING OF UNDERGROUND MEMBER UTILITIES

ARCHITECT:

COLE ARCHITECTS

COLE ARCHITECTS | 802 W. BANNOCK SUIT 208
Boise, ID 83702 | (208) 345-1800

TCA architecture • planning

TCA | 6211 Roosevelt Way NE
Seattle, WA 98115 | (206) 522-3820

STAMP:

STATE OF IDAHO JON S. BRECKON LICENSED LANDSCAPE ARCHITECT

NOT FOR CONSTRUCTION

CONSULTANT:

BRECKON landdesign

- Landscape Architecture
- Erosion & Sediment Control
- Geographic Info Systems
- Graphic Communication
- Water Management
- Irrigation Design
- Land Planning

www.breckonlanddesign.com
Fax: 208-376-6528
Phone: 208-376-5153
181 East 50th Street
Garden City, Idaho 83714

PROJECT INFORMATION:

BOISE CITY OF TREES

BOISE FIRE Est. 1891 DEDICATION

City of Boise Fire Station 4

8485 W. Ustick Rd. Boise, ID 83704

REVISIONS:

MARK	DATE	DESCRIPTION

PROJECT PHASE	Project Status
PROJECT NUMBER	15043
PROJECT MANAGER	R. TeBeau
PROJECT ARCHITECT	R. TeBeau
DESIGN	JB
DRAWN BY	JB, LP, JR, BS

SHEET NAME:

LANDSCAPE DETAILS

SHEET NUMBER:

L1.75

1.29.16

S:_projects\2015\15043 boise fire #4\CAD\15043 170 landll.dwg plotted by: user01 on Mon, February 1 2016 at 05:49 PM

IRRIGATION NOTES

1. SYSTEM DESIGN BASED ON THE ASSUMPTION OF THE AVAILABILITY OF 50 G.P.M. WITH 80 P.S.I. AT THE SOURCE AND 45 P.S.I. AT THE HEADS.
2. ALL LATERAL LINES THAT ARE NOT LABELED SHALL BE 3/4" DIAMETER.
3. CONTRACTOR TO VERIFY LOCATION OF ALL UTILITIES PRIOR TO INITIATION OF ANY DEMOLITION OR CONSTRUCTION OPERATIONS. ANY DAMAGE TO EXISTING UTILITIES SHALL BE CONTRACTOR'S RESPONSIBILITY.
4. COORDINATE ALL IRRIGATION INSTALLATION OPERATIONS WITH CIVIL, MECHANICAL, AND ELECTRICAL ENGINEERING SHEETS.
5. CONTRACTOR SHALL COORDINATE INSTALLATION OF IRRIGATION CONDUIT AND SLEEVES UNDER HARD SURFACES WITH RESPECTIVE CONTRACTORS.
6. ALL SLEEVES SHALL BE INSTALLED AS PART OF IRRIGATION CONTRACT. APPROXIMATE LOCATION OF SLEEVES ARE SHOWN ON THE IRRIGATION PLAN. FIELD VERIFY LOCATION. ALL ENDS OF SLEEVES SHALL BE TAPED OR CAPPED AND MARKED WITH A 2"X 4" PAINTED STAKE EXTENDING TO 24" ABOVE GRADE. STAKES SHALL NOT BE REMOVED UNTIL THE IRRIGATION SYSTEM IS COMPLETE. ALL SLEEVES SHALL EXTEND A MINIMUM OF 18" BEYOND BACK OF CURB OR EDGE OF PAVEMENT. PROVIDE COMPACTED BACKFILL AS NECESSARY AT HARD SURFACE LOCATIONS.
7. CONTRACTOR SHALL OBTAIN AND PAY FOR ALL PERMITS AND FEES REQUIRED FOR THIS WORK.
8. IRRIGATION CONTROLLER(S) ARE TO BE LOCATED AS SHOWN ON THE PLAN. CONTROLLERS SHALL BE WIRED TO POWER SUPPLY BY A LICENSED ELECTRICIAN PER LOCAL CODES. IRRIGATION CONTRACTOR TO PROVIDE ALL REQUIRED CONNECTIONS TO 24 VOLT IRRIGATION CONTROL WIRE INSIDE THE BUILDING THROUGH APPROPRIATE SIZED CONDUIT.
9. ALL HEADS ARE TO BE 6" POP-UP IN LAWN AREAS AND 12" POP-UP IN SHRUB AND GROUND COVER AREAS. IRRIGATED AREAS CONTAINING VEGETATION WHICH POTENTIALLY MAY IMPEDE PERFORMANCE OF A 4" POP-UP SPRINKLER ARE TO BE REPLACED WITH A 12" HIGH POP-UP SPRINKLER.
10. ALL ELECTRICAL WORK TO MEET OR EXCEED N.E.C., STATE CODES, LOCAL CODES, AND MANUFACTURER'S RECOMMENDATIONS.
11. CONTRACTOR SHALL REMOVE AND DISPOSE OF ALL ROCK AND DEBRIS BROUGHT TO THE SURFACE AS A RESULT OF TRENCHING OPERATIONS.
12. CONTRACTOR SHALL REFER TO SPECIFICATIONS AND DETAIL DRAWINGS FOR ADDITIONAL REQUIREMENTS.
13. ALL 24 VOLT POWER WIRES SHALL BE #14 AWG COPPER. ALL ABOVE GROUND 120 VOLT AND 24 VOLT WIRE SHALL BE IN PVC CONDUIT. ONE POWER WIRE SHALL BE PROVIDED BACK TO THE CONTROLLER FOR EACH VALVE. ALL COMMON WIRES SHALL BE #12 AWG COPPER. ALL 24 VOLT WIRES SHALL BE TAPED TOGETHER AT TEN FOOT (10'-0") INTERVALS.
14. INSTALLATION SHALL COMPLY WITH ALL NATIONAL, STATE, AND LOCAL LAWS AND ORDINANCES.
15. IRRIGATION CONTRACTOR SHALL PROVIDE A COMPLETE AS-BUILT DRAWING IN PDF FORMAT UPON COMPLETION OF INSTALLATION AND PRIOR TO FINAL PAYMENT.
16. THE ENTIRE SYSTEM SHALL BE GUARANTEED TO BE COMPLETE AND PERFECT IN EVERY DETAIL FOR A PERIOD OF TWO YEARS FROM THE DATE OF ITS ACCEPTANCE; REPAIR OR REPLACEMENT OF ANY DEFECTS OCCURRING WITHIN THOSE TWO YEARS SHALL BE FREE OF EXPENSE TO THE OWNER.
17. AS PART OF THIS CONTRACT, PERFORM AT NO EXTRA COST WINTERIZATION AND SPRING START UP OF THE SYSTEM DURING THE GUARANTEE PERIOD (2 YEARS).
18. ALL MATERIALS SHALL BE NEW AND WITHOUT FLAWS OR DEFECTS OF THE QUALITY AND PERFORMANCE SPECIFIED, AND SHALL MEET THE REQUIREMENTS OF THIS SYSTEM. USE MATERIALS AS SPECIFIED, NO SUBSTITUTIONS SHALL BE PERMITTED WITHOUT PRIOR WRITTEN PERMISSION OF THE OWNER OR LANDSCAPE ARCHITECT.
19. IRRIGATION CONTRACTOR SHALL MAKE NECESSARY MINOR FIELD ADJUSTMENTS TO SPRINKLER NOZZLES, SPRINKLERS, PIPE, AND OTHER IRRIGATION EQUIPMENT LOCATIONS TO FIT THE AS-BUILT SITE. ADJUST HEAD AND PIPE LOCATIONS AS REQUIRED TO AVOID DAMAGING EXISTING TREE ROOTS. ADJUSTMENTS SHALL ENSURE HEAD TO HEAD COVERAGE AND NOT OVERSPRAY THE BUILDINGS OR OTHER IMPROVEMENTS.
20. IRRIGATION PIPING LAYOUT IS SCHEMATIC. WHERE LINES ARE SHOWN BELOW PAVEMENT ADJACENT TO LANDSCAPE AREAS, THEY SHALL BE LOCATED IN THE LANDSCAPE AREA UNLESS SHOWN WITH A SLEEVE SYMBOL.
21. BASE PLAN AND LOCATION OF EXISTING EQUIPMENT ARE SCHEMATIC IN NATURE. FIELD VERIFY ALL BASE AND EXISTING IRRIGATION ELEMENTS AND CONDITIONS PRIOR TO CONSTRUCTION AND PROVIDE NECESSARY ADJUSTMENTS.
22. IRRIGATION CONTRACTOR SHALL USE THE MANUFACTURER'S APPROVED PRESSURE REGULATING MODULE AS SPECIFIED TO ADJUST ZONE OPERATING PRESSURES TO AN AVERAGE OF 40 P.S.I. IN SPRAY ZONES AND 40 P.S.I. IN ROTOR ZONES.
23. ALL MAIN LINE FITTINGS SHALL BE HARCO DUCTILE IRON PUSH ON TYPE UNLESS NOTED FOR LATERAL SERVICE. (ON 3" OR LARGER ONLY)
24. IN THE EVENT OF A DISCREPANCY, IMMEDIATELY NOTIFY THE LANDSCAPE ARCHITECT.

DRIP IRRIGATION NOTES

1. ALL PLANTER BEDS SHALL BE IRRIGATED WITH AN INLINE EMITTER DRIP LINE IRRIGATION SYSTEM, 'NETAFIM RIN' OR APPROVED EQUAL. ALL TREES IN THE NOTED AREA ARE TO BE IRRIGATED AS PER DETAIL. THE CONTRACTOR IS RESPONSIBLE TO INSTALL THE DRIP SYSTEM AS PER MANUFACTURER'S RECOMMENDATIONS AND THE FOLLOWING REQUIREMENTS:
   A. AN INLINE EMMITTER DRIP LINE TUBING SHALL BE USED. THE EMITTER SPACING SHALL BE EIGHTEEN INCHES (18") AND THE EMITTER FLOWS ARE TO BE .4 G.P.H. LATERALS SHALL BE SPACED AT EIGHTEEN INCHES (21").
   B. A NETAFIM TECHFILTER® WITH A TRIFLURALIN DISC RING SHALL BE INSTALLED ON EACH ZONE. THE FILTER SHALL BE INSTALLED IN CONJUCTION WITH AN ELECTRIC REMOTE CONTROL VALVE AS SPECIFIED (SIZE AS NOTED ON SCHEDULE). THE FILTER MODEL SHALL BE A 1" 120 MESH DISC FILTER (TFI0418-1000RN). SEE DETAIL.
   C. ALL ZONES SHALL BE INSTALLED WITH A LINE FLUSHING VALVE. INSTALL WITH COLLAR. SEE DETAIL.
   D. ALL ZONES SHALL HAVE AN AIR/ VACUUM RELIEF VALVE, SEE DETAIL. THESE SHALL BE INSTALLED AT THE HIGHEST POINTS WITHIN THE ZONES.
   E. ALL TUBING SHALL BE STAKED DOWN WITH TLS6 SIX INCH (6") SOIL STAPLES TO PREVENT EXPOSURE OF PIPE THROUGH MULCH, SEE DETAIL.
2. THE CONTRACTOR SHALL BE RESPONSIBLE TO INSTALL THE DRIP SYSTEM SO THAT THE OPTIMUM AMOUNT OF WATER IS APPLIED TO ENSURE THE HEALTH OF ALL PLANT MATERIAL. EXTRA EMITTERS ARE TO BE INSTALLED AT ALL TREES PLANTED WITHIN THE PLANTER BEDS TO INSURE PROPER WATERING IF NECESSARY.
3. THE CONTRACTOR IS RESPONSIBLE TO SCHEDULE A MEETING WITH THE LANDSCAPE ARCHITECT AND THE OWNER'S REPRESENTATIVE BEFORE PROCEEDING WITH ANY IRRIGATION INSTALLATION IN ORDER TO REVIEW WORK TO BE DONE. NO CHANGES IN MATERIAL SPECIFIED OR TO THE DESIGN OF THE SYSTEM SHALL BE ALLOWED WITHOUT PRIOR APPROVAL OF THE LANDSCAPE ARCHITECT.
4. ALL PVC LATERAL LINES FROM VALVES TO HEADERS ARE TO BE BURIED AT MINIMUM DEPTH OF TWELVE INCHES (12"). SIZE AS NECESSARY. (SEE PIPE SIZING NOTES ON THIS SHEET)
5. AFTER INSTALLATION OF THE IRRIGATION SYSTEM THE CONTRACTOR IS RESPONSIBLE TO PROVIDE THE OWNER WITH AS-BUILT DRAWINGS AND INSTRUCTIONS FOR MAINTENANCE OF THE DRIP SYSTEM.
6. PROVIDE DRIP LINE TO ENSURE EACH SHRUB AND TREE RECEIVES ADEQUATE IRRIGATION. BURY DRIP LINE AT 4" MIN. TO HIDE FROM VIEW, SEE SUB-GRADE INSTALLATION DETAIL
7. POINT SOURCE CONFIGURATION OR SNAKING LAYOUT INSTALLATION TYPES WILL NOT BE ACCEPTED. INSTALL DRIP LINE IN LATERAL ARRANGEMENT PER INSTALLATION DETAILS. ADJUST DRIP LINE LOCATION TO OBTAIN COMPLETE COVERAGE OF DRIP ZONE AREAS AT SPECIFIED SPACING AS NOTED ABOVE.
8. REFER TO NOTES FOR SPECIFICATIONS.

SYSTEM OPERATIONAL NOTES

SYSTEM OPERATION:

(based on historical climate)

CONTROLLER SETUP:

A cycling technique will be used for application of water, each station run time will be applied with three (3) different start times. Therefore station run times reflect one third (1/3) the total application. Peak water application will require irrigation every night. Set controllers for start time #1 at 1:30p.m., start time #2 at 12:00a.m., and start time #3 at 5:30a.m. Extend water window if required to meet peak water requirements.

INITIAL STATION RUN TIMES:

DRIP ZONES: SHRUBS - 20 MINUTE CYCLES.
PRO SPRAY ZONES: TURF - 3 MINUTE CYCLES.
ROTOR SPRAY ZONES: TURF - 15 MINUTE CYCLES.

SYSTEM BALANCING:

As the system operates, some zones will be wet while others are dry. Adjust only those stations which require additional or less water. For example, if station TS1, a 15' turf spray zone is always dry, change the station TS1 run time from fifteen (15) minutes to sixteen (16) minutes. Continue making adjustments until the zone moisture content is acceptable. Use nozzle changes or nozzle screw adjustments to adjust wet and dry areas within a zone.

PRESSURE IRRIGATION SYSTEM NON-POTABLE WATER NOTES

1. ALL VALVE BOXES, QUICK COUPLER VALVES, SPRINKLER HEAD COVERS, AND AUTOMATIC CONTROL VALVES SHALL BE PURPLE TINTED IDENTIFICATION MATERIAL, MARKED WITH "DO NOT DRINK" WARNING.
2. INSTALL FINDER TAPE OVER ALL IRRIGATION MAINS. TAPE SHALL BE 2" WIDE, METALLIC PURPLE IN COLOR, WITH THE WORDS "DANGER - UNSAFE WATER" OR "NON-POTABLE WATER" CLEARLY MARKED ALONG THE LENGTH OF THE TAPE. TAPE SHALL BE PLACED BETWEEN SIX INCHES (6") AND EIGHTEEN INCHES (18") BELOW THE SURFACE, DIRECTLY ABOVE THE TOP OF THE PIPE.
2. THE HORIZONTAL SEPARATION OF POTABLE WATER MAINS AND NON-POTABLE WATER MAINS (SANITARY SEWER, STORM DRAIN, AND IRRIGATION) SHALL BE A MINIMUM OF TEN (10) FEET. WHERE IT IS NECESSARY FOR A POTABLE WATER MAIN AND NON-POTABLE WATER MAIN TO CROSS WITH LESS THAN EIGHTEEN (18) INCHES OF VERTICAL SEPARATION, THE CROSSING SHALL BE CONSTRUCTED IN ACCORDANCE WITH SECTION 542.07 OF THE IDAHO RULES FOR PUBLIC DRINKING WATER SYSTEMS (IDAPA 58.01.08) AND SECTION 430.02 OF THE WASTEWATER RULES (IDAPA 58.01.16).
3. THE HORIZONTAL SEPARATION OF NON-POTABLE SERVICES AND POTABLE WATER SERVICES OR POTABLE WATER MAINS SHALL BE A MINIMUM OF SIX (6) FEET. WHERE IT IS NECESSARY FOR A POTABLE WATER MAIN AND NON-POTABLE WATER MAIN TO CROSS WITH LESS THAN EIGHTEEN (18) INCHES OF VERTICAL SEPARATION, THE CROSSING SHALL BE CONSTRUCTED IN ACCORDANCE WITH SECTION 542.07 OF THE IDAHO RULES FOR PUBLIC DRINKING WATER SYSTEMS (IDAPA 58.01.08) AND SECTION 430.02 OF THE WASTEWATER RULES (IDAPA 58.01.16).
4. REFER TO CIVIL PLANS FOR ADDITIONAL INFORMATION.

CAUTION NOTICE

THE CONTRACTOR IS SPECIFICALLY CAUTIONED THAT THE LOCATION AND/OR ELEVATION OF EXISTING UTILITIES AS SHOWN ON THESE PLANS IS BASED ON RECORDS OF THE VARIOUS UTILITY COMPANIES AND, WHERE POSSIBLE, MEASUREMENTS TAKEN IN THE FIELD. THE INFORMATION IS NOT TO BE RELIED ON AS BEING EXACT OR COMPLETE. THE CONTRACTOR MUST CALL THE LOCAL UTILITY LOCATION CENTER AT LEAST 48 HOURS BEFORE ANY EXCAVATION TO REQUEST EXACT FIELD LOCATIONS OF THE UTILITIES. IT SHALL BE THE RESPONSIBILITY OF THE CONTRACTOR TO RELOCATE ALL EXISTING UTILITIES WHICH CONFLICT WITH THE PROPOSED IMPROVEMENTS SHOWN ON THE PLANS.

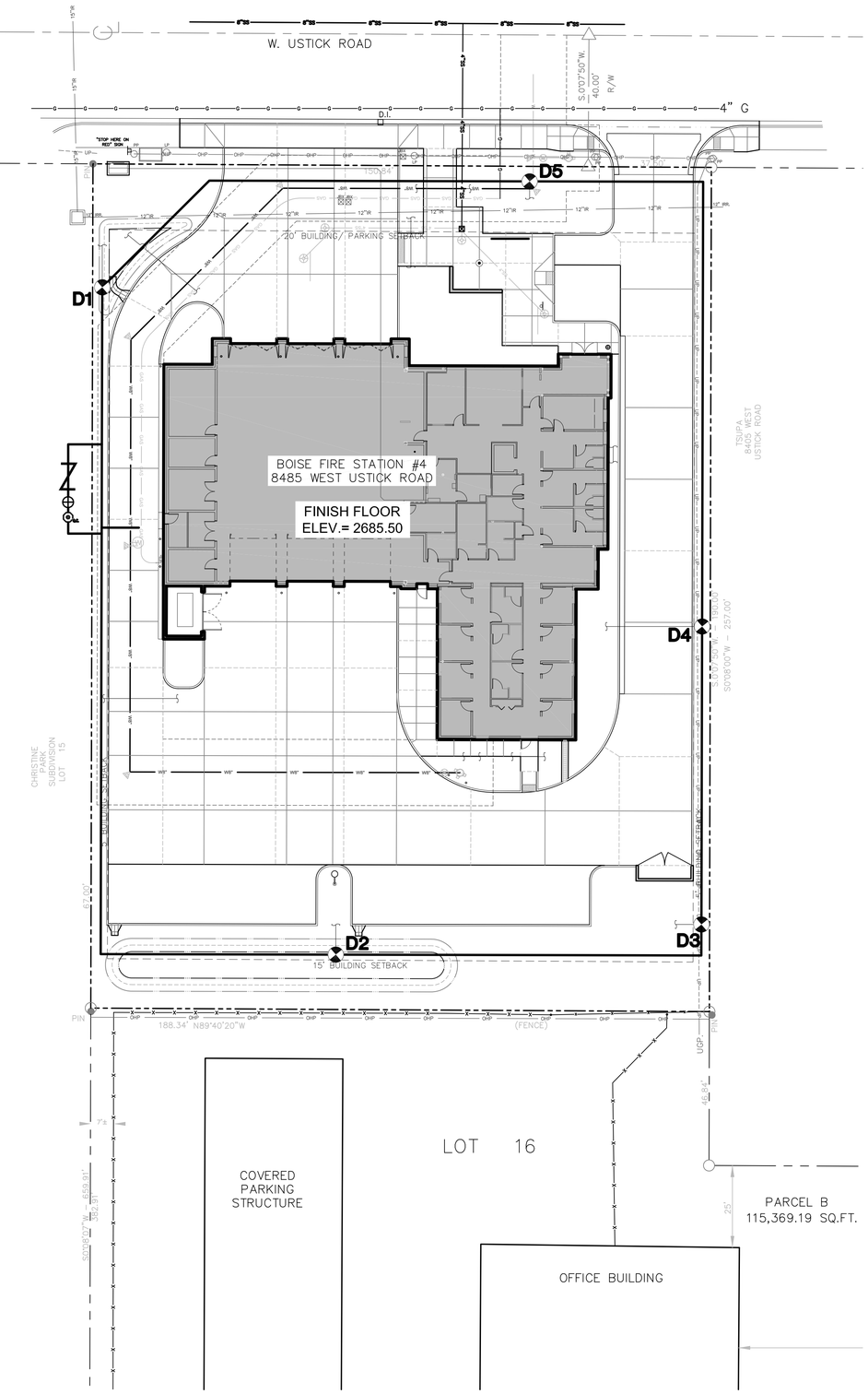

1 IRRIGATION PLAN
SCALE: 1" = 20' - 0"

ZONE SCHEDULE

ZONE #	GPM	PSI	VALVE SIZE
D 1	12.32	30	1 1/2"
D 2	20.93	30	1 1/2"
D 3	11.27	30	1 1/2"
D 4	5.54	30	1 1/2"
D 5	8.60	30	1 1/2"

811 Know what's below. Call before you dig.
CALL 2 BUSINESS DAYS IN ADVANCE BEFORE YOU DIG, GRADE, OR EXCAVATE FOR THE MARKING OF UNDERGROUND MEMBER UTILITIES

IRRIGATION MATERIAL LEGEND

SYMBOL	DESCRIPTION
05 10 20	'NETAFIM' POINT SOURCE SELF PIERCING EMITTERS WITH CHECK VALVE. MODEL NUMBERS SPCV05, SPCV10, AND SPCV20 PER PLANS.
	'NETAFIM' LVCZ-150 AND LVCZS80100075 ELECTRIC REMOTE CONTROL VALVE.
TS3	'NETAFIM' REMOTE CONTROL VALVE LABEL (D = DRIP).
1¼"	SCHEDULE 40 SOLVENT WELD PVC LATERAL LINE, SIZE AS INDICATED ON PLANS. PROVIDE ONE (1) KING DRAIN AUTOMATIC DRAIN VALVE AT LOW POINT OF EACH LATERAL ZONE.
	1 1/2" SCHEDULE 40 SOLVENT WELD PVC MAIN LINE.
6" SLV	EXISTING 4" SLEEVE TO BE UTILIZED BY LIGHTING AND IRRIGATION. 4X AT EACH LOCATION (USE ADDITIONAL SLEEVE AT ALL MAIN LINE SLEEVE LOCATIONS FOR CONTROL WIRES.)
1½"	GRAY SCHEDULE 40 PVC FOR ELECTRICAL CONTROL WIRES, SIZE AS INDICATED ON PLANS. COORDINATE WITH ELECTRICAL.
	WILKINS GATE VALVE OR APPROVED EQUAL, SIZE TO MATCH MAIN LINE, SEE DETAIL.
	'NETAFIM' HYDROMETER / MASTER VALVE MODEL # LHM15T60053-MEL-NO
	1" HUNTER HQ-5LRC QUICK COUPLING VALVE W/ HK-55 KEY, AND HOSE SWIVEL, SEE DETAIL.
	NIBCO MANUAL DRAIN VALVE SIZE TO MATCH MAINLINE, SEE DETAIL.
	CRISPIN AIR RELEASE VALVE AS SPECIFIED, SEE DETAIL.
	REDUCED PRESSURE BACK FLOW PREVENTOR, SIZE TO MATCH MAINLINE, SEE DETAIL.
	NETAFIM NLG-100 SITE CONTROLLER WITH PEDESTAL ENCLOSURE, MODEL #NLG5P-025-C12-N-NO-Y, SEE DETAIL.
	NETAFIM WEATHER STATION AND RECEIVER, MODEL #'S NLET300NX AND NLETBK-NX. INSTALL PER MANUFACTURES RECOMMENDATIONS.

CALLOUT LEGEND

1. CONNECT NEW 1 1/2" MAINLINE TO 1" METER STUB PROVIDED BY OTHERS IN THIS APPROXIMATE LOCATION. (FIELD VERIFY)
2. 2" WIRE SLEEVE. ROUTE TO CONTROLLER LOCATION PER LOCAL CODES AS REQUIRED.
3. PEDESTAL MOUNT IRRIGATION CONTROLLER IN THIS APPROXIMATE LOCATION AS REQUIRED. CONNECT 120 VOLT AS REQUIRED. ALL ABOVE GRADE WIRES SHALL BE LOCATED IN APPROPRIATELY SIZED CONDUIT (2" MINIMUM). IRRIGATION CONTRACTOR SHALL BE RESPONSIBLE TO COORDINATE WITH CERTIFIED ELECTRICAL CONTRACTOR FOR ALL ELECTRICAL CONNECTIONS. IRRIGATION CONTRACTOR SHALL ENSURE ALL CONTROLLER OPTIONS AND ZONES ARE FULLY OPERATIONAL AFTER TRENCHING HAS FINISHED. CONTROLLER LOCATION TO BE OWNER APPROVED.
4. EXTEND EXTRA WIRES TO THIS POINT, COIL APPROXIMATELY 24" LENGTH OF EXTRA WIRES IN SEPARATE VALVE BOX AT THIS LOCATION.
5. INSTALL 'NETAFIM' PRESSURE INDICATOR STAKE AT END OF DRIPZONE LINE TO ENSURE PROPER FUNCTIONALITY.
6. CAP MAINLINE IN THIS APPROXIMATE AREA, ENSURE A WATER TIGHT FITTING.
7. CONNECT CONTROLLER POWER TO EXISTING JUNCTION BOX PROVIDED BY IDAHO POWER IN THIS APPROXIMATE LOCATION. COORDINATE AS REQUIRED. ROUTE POWER LINE ALONG BACK OF SIDEWALK.
8. ROUTE POLYETHYLENE LATERAL LINE ALONG BACK OF SIDEWALK AS SHOWN PER PLANS, PROVIDE SCHEDULE 40 SLEEVING AT DRIVEWAY LOCATIONS AS SHOWN.
9. CONNECT ALL POINT SOURCE EMITTERS IN THIS AREA TO DRIP ZONE D18. REFER TO LANDSCAPE PLANS FOR SHRUB LOCATIONS.

INSTALL DRIP ZONE ON SLOPE AS SHOWN. START AT TOP OF BANK. REFER TO GRADING PLANS FOR ADDITIONAL INFORMATION.

DRIP MATERIAL LEGEND

- DRIP - AREA ONE
- DRIP - AREA TWO
- DRIP - AREA THREE
- DRIP - AREA FOUR
- DRIP - AREA FIVE

ARCHITECT:

COLE ARCHITECTS

COLE ARCHITECTS | 802 W. BANNOCK SUIT 208
Boise, ID 83702 | (208) 345-1800

TCA architecture • planning
TCA | 6211 Roosevelt Way NE
Seattle, WA 98115 | (206) 522-3820

STAMP:

STATE OF IDAHO
NOT FOR CONSTRUCTION
IDAHO LANDSCAPE ARCHITECT

CONSULTANT:

BRECKON landdesign
• Landscape Architecture
• Erosion & Sediment Control
• Geographic Info Systems
• Graphic Communication
• Water Management
• Irrigation Design
• Land Planning
www.breckonlanddesign.com
Fax: 208-376-6528
Phone: 208-376-5153
181 East 50th Street
Garden City, Idaho 83714

PROJECT INFORMATION:

BOISE CITY OF TREES

BOISE FIRE Est. 1891 DEDICATION

City of Boise Fire Station 4

8485 W. Ustick Rd. Boise, ID 83704

REVISIONS:

MARK	DATE	DESCRIPTION

PROJECT PHASE	Project Status
PROJECT NUMBER	15043
PROJECT MANAGER	R. TeBeau
PROJECT ARCHITECT	R. TeBeau
DESIGN	JB
DRAWN BY	JB, LP, JR, BS

SHEET NAME:

IRRIGATION PLAN

SHEET NUMBER:

L1.80

1.29.16

S:_projects\2015\15043 boise fire #4\CAD\15043 180 irr-04.dwg plotted by user01 on Mon, February 1 2016 at 05:52 PM

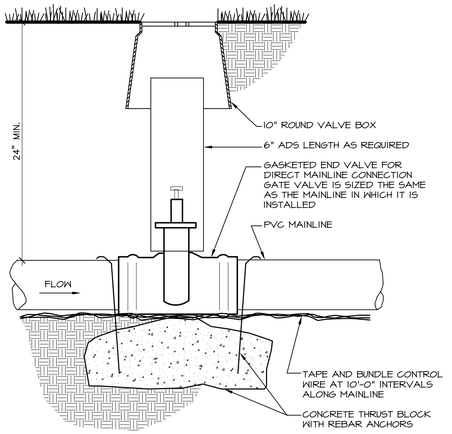

1 ISOLATION VALVE

NOT TO SCALE

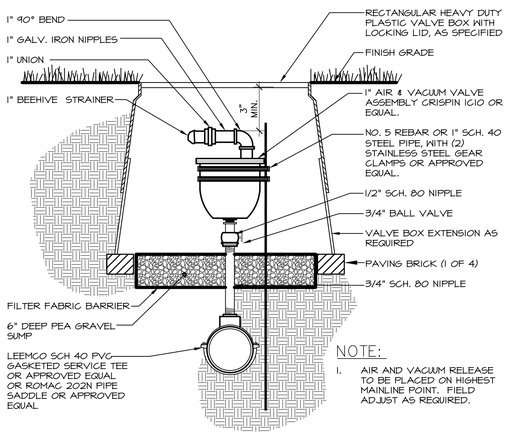

NOTE:

1. AIR AND VACUUM RELEASE TO BE PLACED ON HIGHEST MAINLINE POINT. FIELD ADJUST AS REQUIRED.

2 AIR RELIEF VALVE

NOT TO SCALE

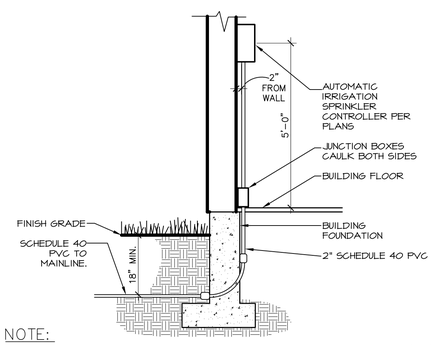

NOTE:

1. COORDINATE CONDUIT INSTALLATION WITH ELECTRICAL AND FOUNDATION INSTALLATION.
2. SEE ELECTRICAL PLAN FOR EXACT LOCATION. COORDINATE AS REQUIRED FOR PLACEMENT ON INTERIOR WALL.

3 AUTOMATIC IRRIGATION CONTROLLER

NOT TO SCALE

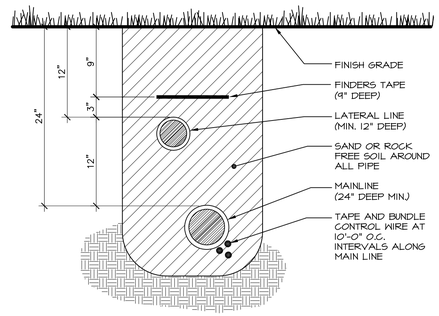

4 TRENCH SECTION

NOT TO SCALE

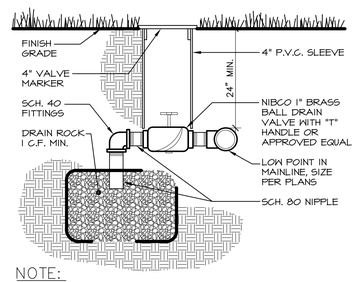

NOTE:

1. DRAIN LINES MAY BE DIRECTED TO THE SITE DRAINAGE SYSTEM WHERE APPLICABLE. REFER TO PLANS FOR MORE INFORMATION.

5 MANUAL DRAIN VALVE

NOT TO SCALE

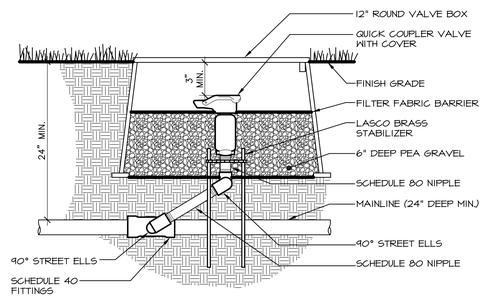

6 QUICK COUPLER VALVE

NOT TO SCALE

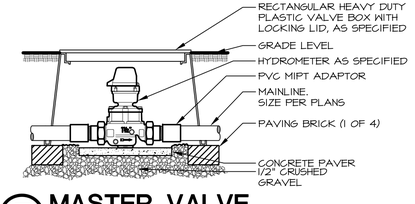

7 MASTER VALVE

NOT TO SCALE

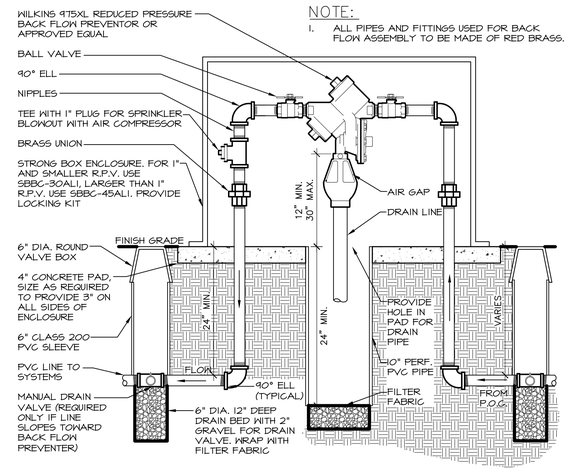

NOTE:

1. ALL PIPES AND FITTINGS USED FOR BACK FLOW ASSEMBLY TO BE MADE OF RED BRASS.

8 REDUCED PRESSURE BACK FLOW PREVENTER

NOT TO SCALE

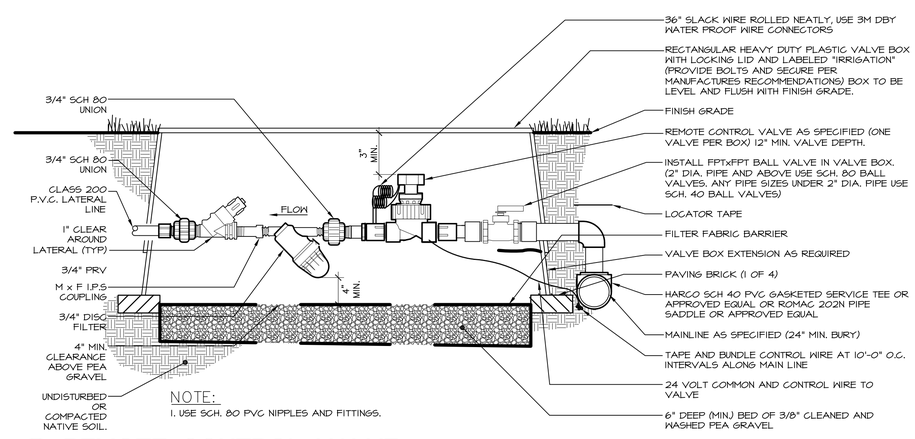

NOTE:

1. USE SCH. 80 PVC NIPPLES AND FITTINGS.

9 REMOTE CONTROL VALVE WITH 3/4" FILTER

NOT TO SCALE

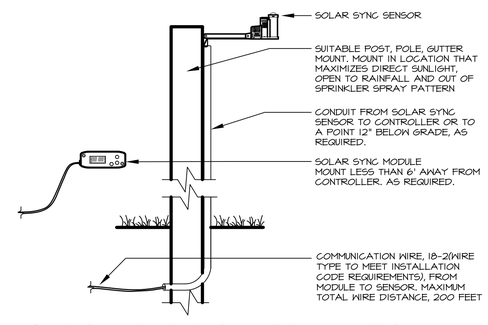

10 SOLAR SYNC INSTALLATION

Scale: NTS

Know what's below. Call before you dig.

CALL 2 BUSINESS DAYS IN ADVANCE BEFORE YOU DIG, GRADE, OR EXCAVATE FOR THE MARKING OF UNDERGROUND MEMBER UTILITIES

ARCHITECT:

COLE ARCHITECTS

COLE ARCHITECTS | 802 W. BANNOCK SUIT 208
Boise, ID 83702 | (208) 345-1800

TCA architecture • planning

TCA | 6211 Roosevelt Way NE
Seattle, WA 98115 | (206) 522-3820

STAMP:

STATE OF IDAHO — JOHN S. BRECKON — LICENSED LANDSCAPE ARCHITECT

NOT FOR CONSTRUCTION

CONSULTANT:

BRECKON landdesign

- Landscape Architecture
- Erosion & Sediment Control
- Geographic Info Systems
- Graphic Communication
- Water Management
- Irrigation Design
- Land Planning

www.breckonlanddesign.com
Fax: 208-376-6528
Phone: 208-376-5153
181 East 50th Street
Garden City, Idaho 83714

PROJECT INFORMATION:

BOISE CITY OF TREES

BOISE FIRE Est. 1891 DEDICATION

City of Boise Fire Station 4

8485 W. Ustick Rd. Boise, ID 83704

REVISIONS:

MARK	DATE	DESCRIPTION

PROJECT PHASE	Project Status
PROJECT NUMBER	15043
PROJECT MANAGER	R. TeBeau
PROJECT ARCHITECT	R. TeBeau
DESIGN	JB
DRAWN BY	JB, LP, JR, BS

SHEET NAME:

IRRIGATION DETAILS

SHEET NUMBER:

L1.85

1.29.16

S:_projects\2015\15043 boise fire #4\CAD\15043 180 irr04.dwg plotted by: user01 on Mon, February 1 2016 at 05:52 PM

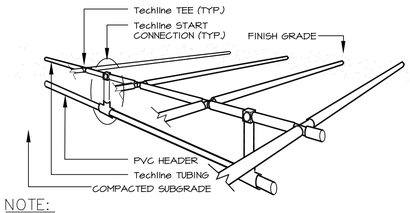

NOTE:
1. SEE PLANS & LEGEND FOR ALL DIMENSIONS AND TECHLINE LATERAL SPACING
2. RATIO OF TECHLINE LATERALS TO START CONNECTIONS IS SHOWN AT 2:1, BUT MAY VARY PER HYDRAULIC DEMAND ON START CONNECTION. (SEE PLANS & LEGEND)

1 TECHLINE SUB-HEADER INSTALLATION

NOT TO SCALE

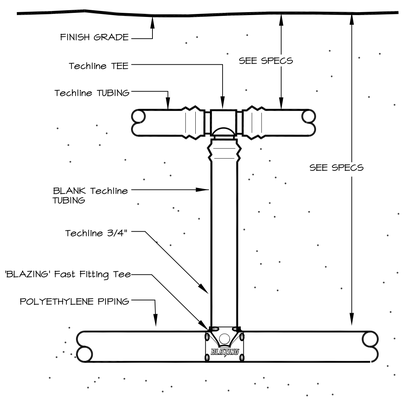

2 TECHLINE START CONNECTON (Lateral Line to Tee)

NOT TO SCALE

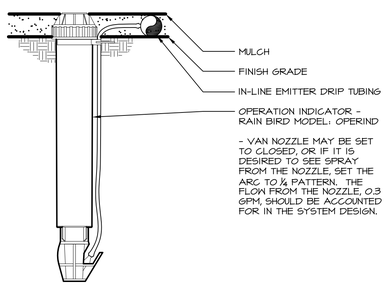

3 OPERATION INDICATOR

NOT TO SCALE

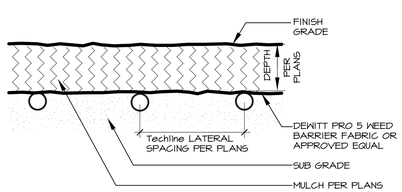

4 TECHLINE SUBGRADE INSTALLATION

NOT TO SCALE

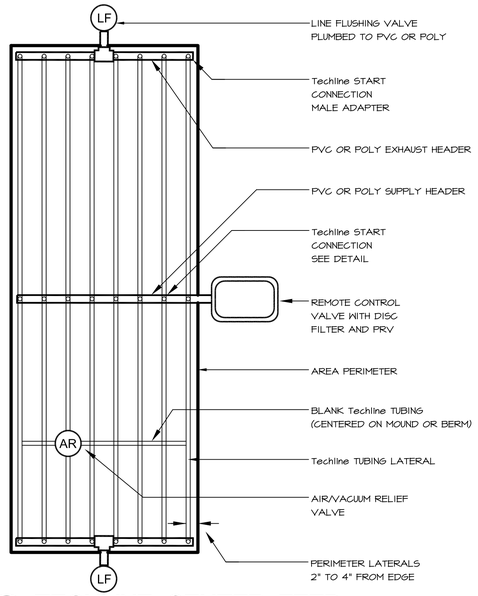

5 TECHLINE CENTER FEED LAYOUT

NOT TO SCALE

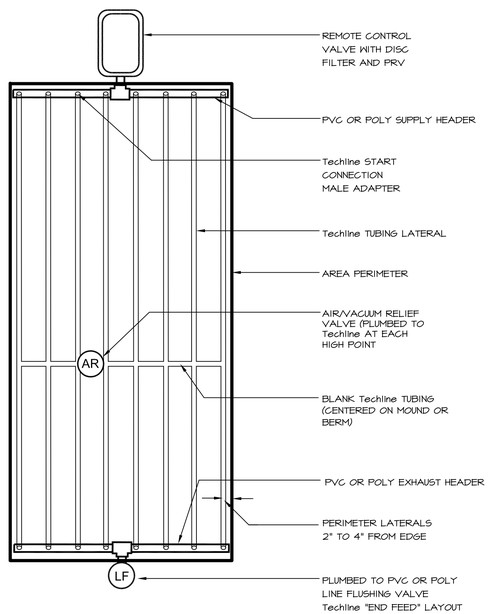

6 TECHLINE END FEED LAYOUT

NOT TO SCALE

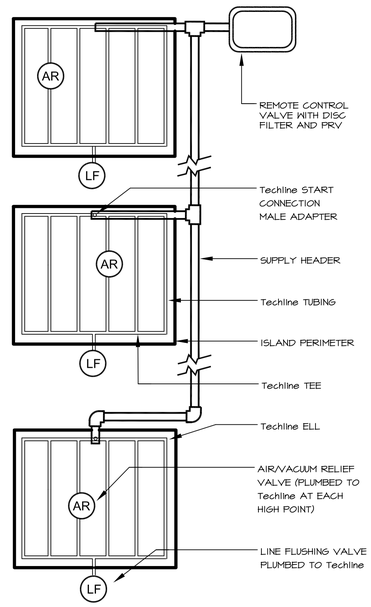

7 TECHLINE ISLAND LAYOUT

NOT TO SCALE

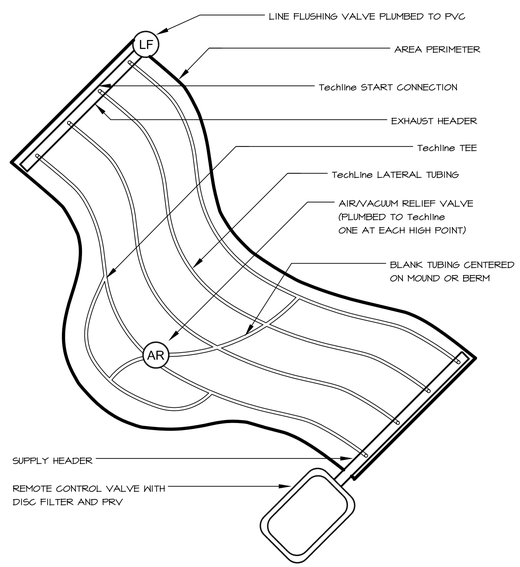

8 TECHLINE CURVED AREA LAYOUT

NOT TO SCALE

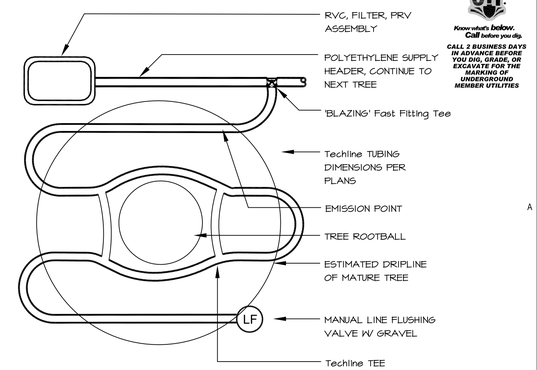

9 TECHLINE TUBING & ASSESSORY FOR TREE PLANTING

NOT TO SCALE

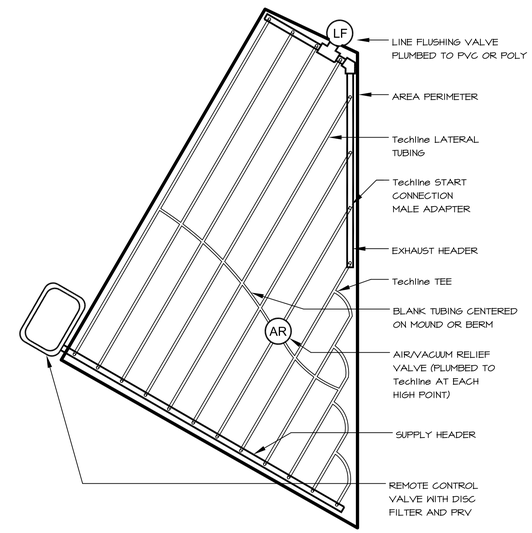

10 TECHLINE TRIANGULAR LAYOUT

NOT TO SCALE

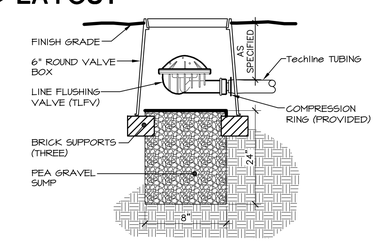

11 FLUSHING VALVE

NOT TO SCALE

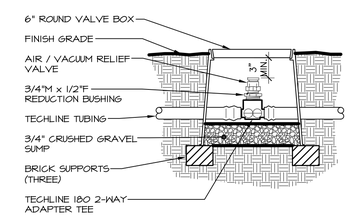

12 AIR / VACUUM RELIEF VALVE

NOT TO SCALE

811 Know what's below. Call before you dig.

CALL 2 BUSINESS DAYS IN ADVANCE BEFORE YOU DIG, GRADE, OR EXCAVATE FOR THE MARKING OF UNDERGROUND MEMBER UTILITIES

ARCHITECT:

COLE ARCHITECTS

COLE ARCHITECTS | 802 W. BANNOCK SUIT 208
Boise, ID 83702 | (208) 345-1800

TCA architecture • planning

TCA | 6211 Roosevelt Way NE
Seattle, WA 98115 | (206) 522-3820

STAMP:

STATE OF IDAHO — JOHN S. BRECKON — LICENSED LANDSCAPE ARCHITECT

NOT FOR CONSTRUCTION

CONSULTANT:

BRECKON landdesign

- Landscape Architecture
- Erosion & Sediment Control
- Geographic Info Systems
- Graphic Communication
- Water Management
- Irrigation Design
- Land Planning

www.breckonlanddesign.com
Fax: 208-376-6528
Phone: 208-376-5153
181 East 50th Street
Garden City, Idaho 83714

PROJECT INFORMATION:

BOISE CITY OF TREES — BOISE FIRE EST. 1891 DEDICATION

City of Boise Fire Station 4

8485 W. Ustick Rd. Boise, ID 83704

REVISIONS:

MARK	DATE	DESCRIPTION

PROJECT PHASE	Project Status
PROJECT NUMBER	15043
PROJECT MANAGER	R. TeBeau
PROJECT ARCHITECT	R. TeBeau
DESIGN	JB
DRAWN BY	JB, LP, JR, BS

SHEET NAME:

IRRIGATION DETAILS

SHEET NUMBER:

L1.86

1.29.16

S:_projects\2015\15043 boise fire #4\CAD\15043 180 irr04.dwg plotted by: user01 on Mon, February 1 2016 at 05:52 PM

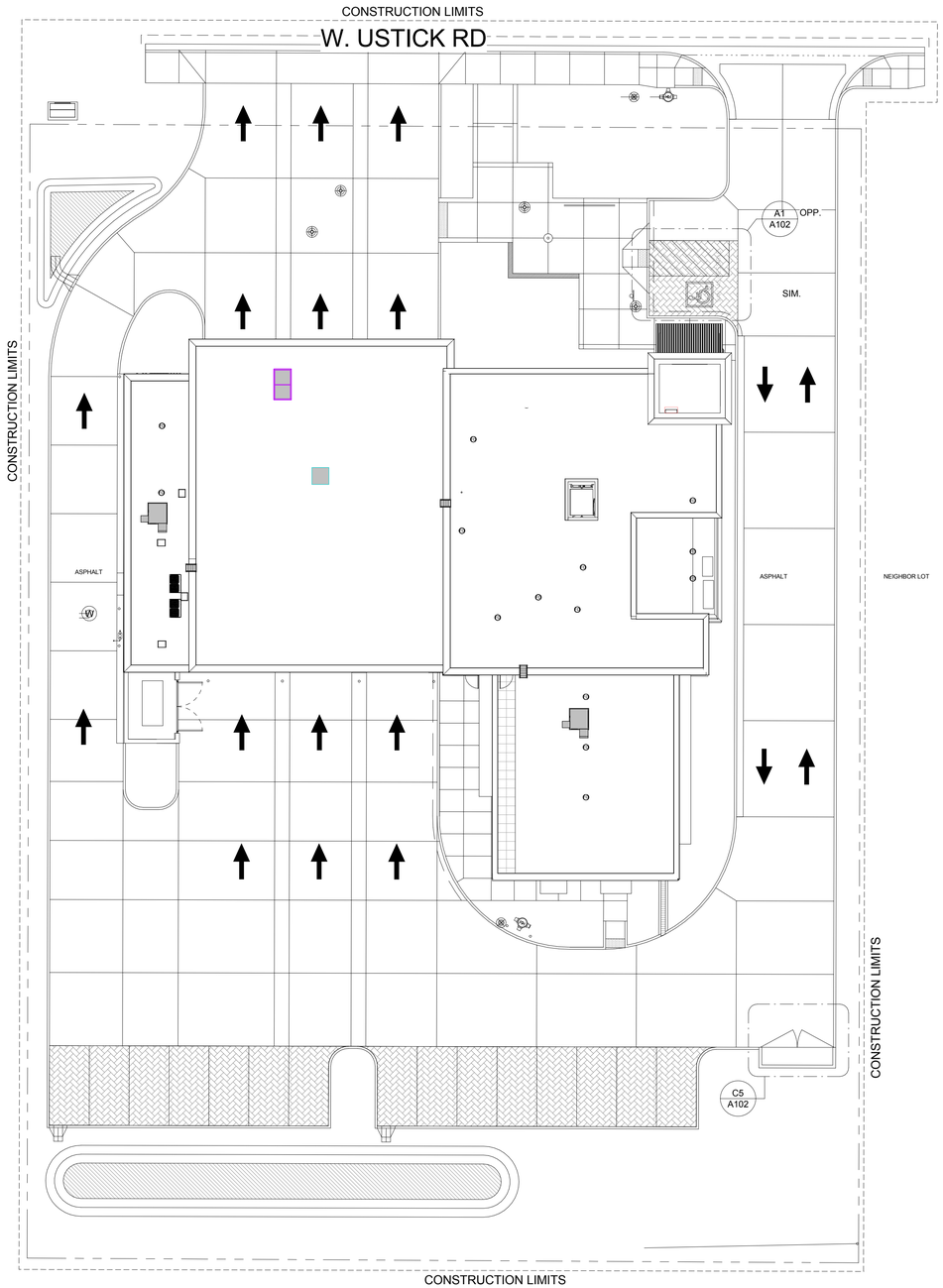

SITE PLAN
1/16" = 1'-0"

NORTH

GENERAL NOTES SITE PLAN:

A. BEFORE PROCEEDING TO LAY OUT THE WORK, VERIFY LAYOUT INFORMATION SHOWN ON DRAWINGS, IN RELATION TO THE PROPERTY SURVEY AND EXISTING BENCHMARKS. IF DISCREPANCIES ARE DISCOVERED, NOTIFY ARCHITECT PROMPTLY.

B. ENGAGE A LAND SURVEYOR OR PROFESSIONAL ENGINEER TO LAY OUT THE WORK USING ACCEPTED SURVEYING PRACTICES.

C. ESTABLISH BENCHMARKS AND CONTROL POINTS TO SET LINES AND LEVELS AT EACH STORY OF CONSTRUCTION AND ELSEWHERE AS NEEDED TO LOCATE EACH ELEMENT OF PROJECT.

D. ESTABLISH LIMITS ON USE OF PROJECT SITE. IF STAGING AREA IS NOT DESIGNATED ON PLANS, THEN COORDINATE LOCATION WITH OWNER.

E. ESTABLISH DIMENSIONS WITHIN TOLERANCES INDICATED. DO NOT SCALE DRAWINGS TO OBTAIN REQUIRED DIMENSIONS.

F. INFORM SUBCONTRACTORS OF LINES AND LEVELS TO WHICH THEY MUST COMPLY.

G. CHECK THE LOCATION, LEVEL AND PLUMB, OF EVERY MAJOR ELEMENT AS THE WORK PROGRESSES.

H. LOCATE AND LAY OUT CONTROL LINES AND LEVELS FOR STRUCTURES, BUILDING FOUNDATIONS, COLUMN GRIDS, AND FLOOR LEVELS, INCLUDING THOSE REQUIRED FOR MECHANICAL AND ELECTRICAL WORK. TRANSFER SURVEY MARKINGS AND ELEVATIONS FOR USE WITH CONTROL LINES AND LEVELS. LEVEL FOUNDATIONS AND PIERS FROM TWO OR MORE LOCATIONS.

KEY NOTES:

1. XXX

ARCHITECT:

COLE ARCHITECTS

COLE ARCHITECTS | 802 W. BANNOCK SUIT 208
Boise, ID 83702 | (208) 345-1800

TCA
architecture • planning

TCA | 6211 Roosevelt Way NE
Seattle, WA 98115 | (206) 522-3820

STAMP:

NOT FOR CONSTRUCTION

CONSULTANT:

PROJECT INFORMATION:

City of Boise Fire Station 4

8485 W Ustick Rd, Boise, ID 83704

REVISIONS:

MARK	DATE	DESCRIPTION

PROJECT PHASE	75% CD'S
PROJECT NUMBER	15-27
PROJECT MANAGER	J. Chatfield
PROJECT ARCHITECT	J. Chatfield
DESIGN	J. Chatfield
DRAWN BY	J. Chatfield, C. Clay, R. Stewart

SHEET NAME:

SITE PLAN

SHEET NUMBER:

A101

02.02.16

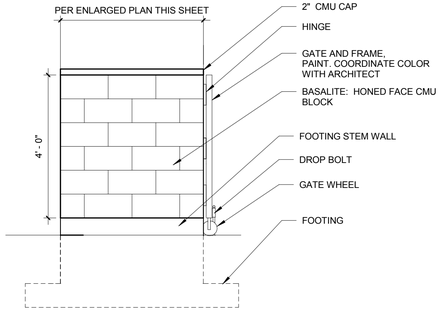

A5 TRASH ENCLOSURE ELEVATION
1/2" = 1'-0"

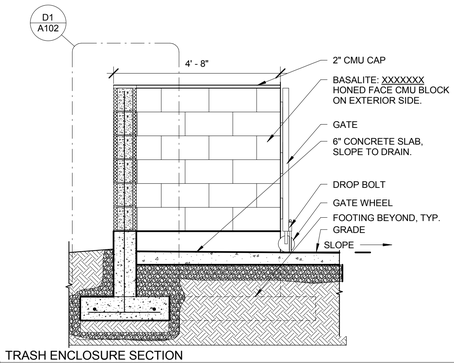

A4 TRASH ENCLOSURE SECTION
1/2" = 1'-0"

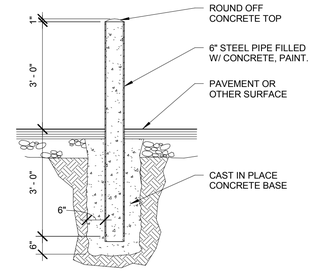

A3 BOLLARD DETAIL
1/2" = 1'-0"

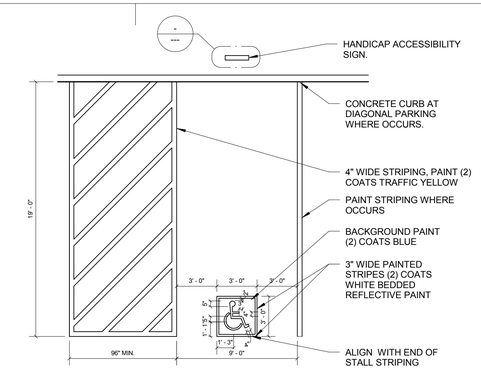

A1 ADA PARKING STALL
3/16" = 1'-0"

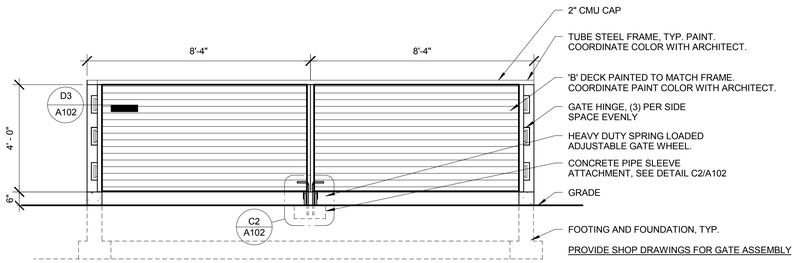

B5 TRASH ENCLOSURE GATES
3/8" = 1'-0"

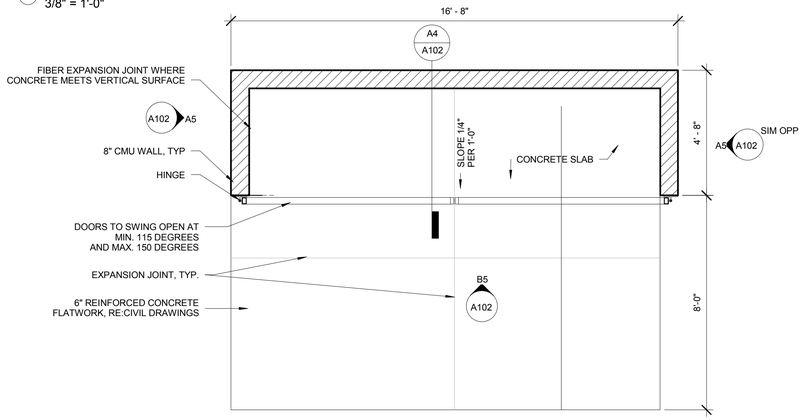

C5 TRASH ENCLOSURE
3/8" = 1'-0"

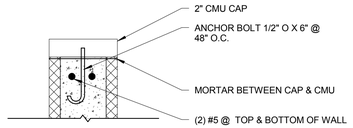

C3 TRASH ENCLOSURE CAP DETAIL
1 1/2" = 1'-0"

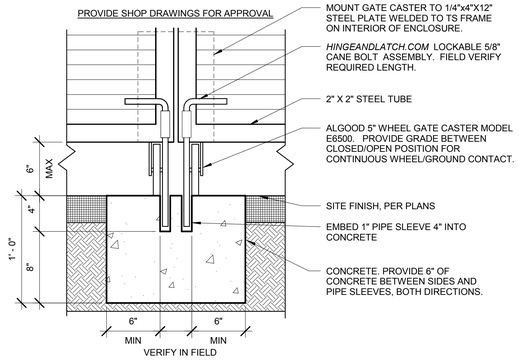

C2 TRASH ENCLOSURE GATE LATCH
1 1/2" = 1'-0"

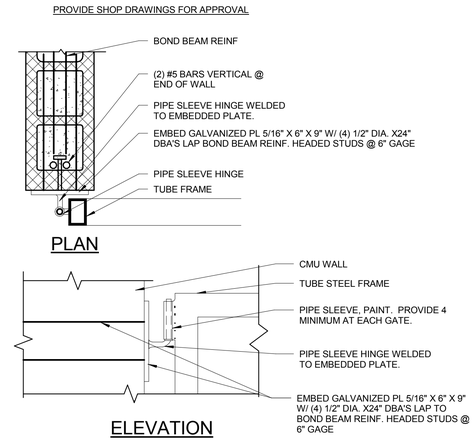

D3 TRASH ENCLOSURE HINGE DETAIL
1 1/2" = 1'-0"

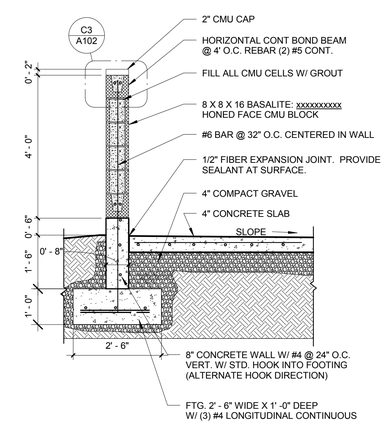

D1 TRASH ENCLOSURE WALL DETAIL
1/2" = 1'-0"

ARCHITECT:

COLE ARCHITECTS

COLE ARCHITECTS | 802 W. BANNOCK SUIT 208
Boise, ID 83702 | (208) 345-1800

TCA architecture • planning

TCA | 6211 Roosevelt Way NE
Seattle, WA 98115 | (206) 522-3820

STAMP:

NOT FOR CONSTRUCTION

CONSULTANT:

PROJECT INFORMATION:

City of Boise Fire Station 4

8485 W Ustick Rd, Boise, ID 83704

REVISIONS:

MARK	DATE	DESCRIPTION

PROJECT PHASE	75% CD'S
PROJECT NUMBER	15-27
PROJECT MANAGER	J. Chatfield
PROJECT ARCHITECT	J. Chatfield
DESIGN	J. Chatfield
DRAWN BY	J. Chatfield, C. Clay, R. Stewart

SHEET NAME:

SITE PLAN DETAILS

SHEET NUMBER:

A102

02.02.16

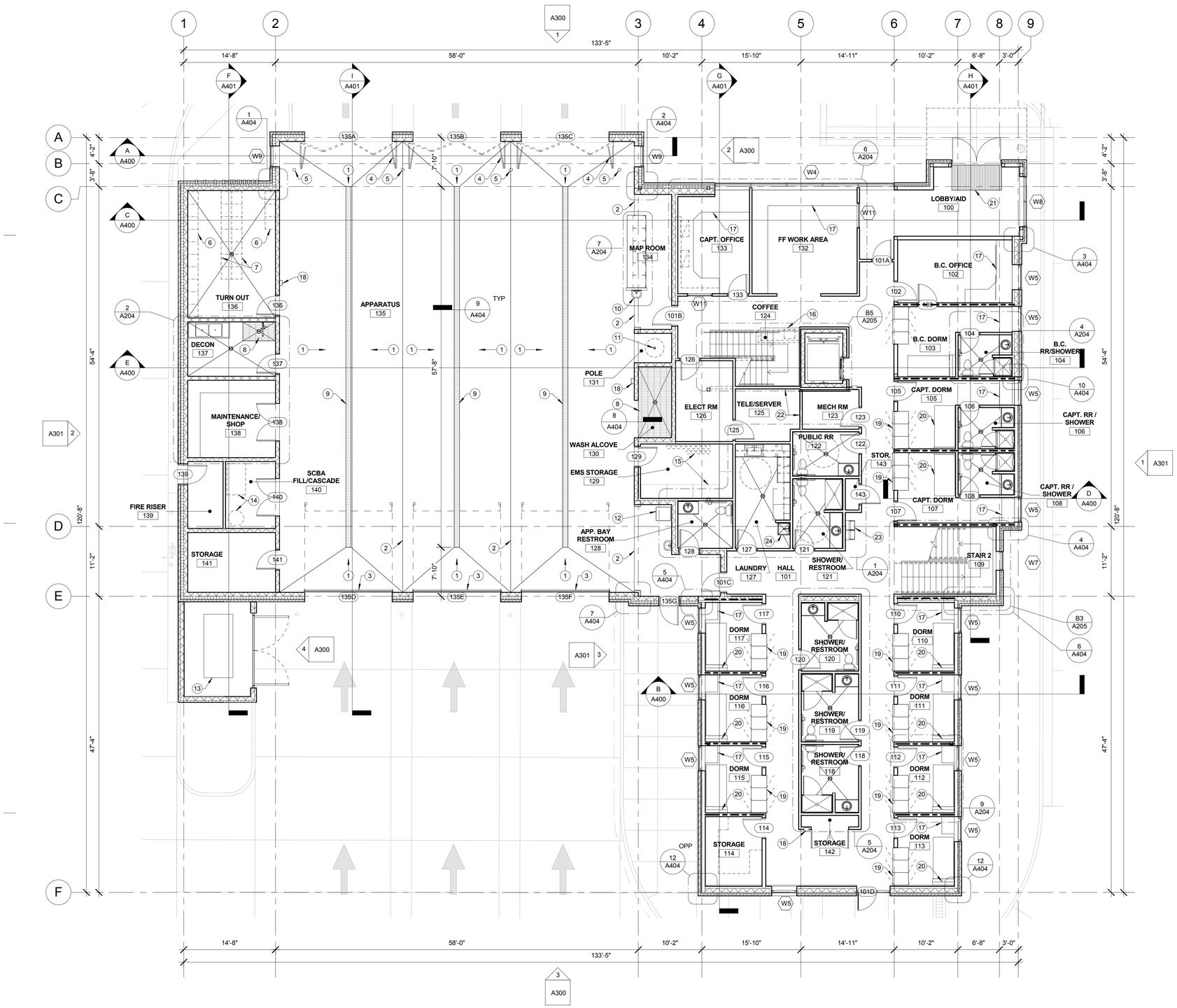

1ST FLOOR PLAN
1/8" = 1'-0"

GENERAL NOTES FLOOR PLAN:

A. GENERAL NOTES APPLY TO ALL DRAWING SETS.

B. RE: SHEET A700 FOR DOOR TYPES & SCHEDULE.

C. RE: SHEET A701 FOR WINDOW TYPES.

D. RE: DIMENSION PLANS, WALL TYPES & DETAILS.

E. CROSS REFERENCES SHOWN ON DRAWINGS DO NOT NECESSARILY INDICATE ALL LIKE CONDITIONS AND DO NOT LIMIT APPLICATION OF ANY DRAWING OR DETAIL. WHERE SPECIFIC DIMENSIONS, DETAILS, OR DESIGN INTENT CANNOT BE DETERMINED, CONSULT THE ARCHITECT PRIOR TO PROCEEDING WITH WORK. IF DESIGN INTENT REMAINS UNCLEAR THEN PROVIDE MOST EXPENSIVE OPTION IN BID.

F. PROVIDE SOLID BLOCKING IN WALLS FOR ALL WALL HUNG EQUIPMENT. BLOCKING TO MEET OR EXCEED MANUFACTURER'S RECOMMENDATIONS. FASTEN EQUIPMENT TO WALLS PER MANUFACTURER'S RECOMMENDATIONS. PROVIDE BLOCKING FOR, BUT NOT LIMITED TO THE FOLLOWING: MILLWORK, RAILING, FIRE EXTINGUISHER ACCESSORIES, WALL MOUNTED PLUMBING FIXTURES, SHELVING, ELECTRICAL EQUIPMENT, RESTROOM ACCESSORIES AND DISPLAY ITEMS.

G. CAULK ALL COUNTERTOPS, BACKSLASHES AND CABINETS AT LOCATIONS WHERE THEY MEET WALLS. SEAL ALL CUT-OUTS IN COUNTERTOPS.

H. MATCH FINISHED WALL THICKNESS WHERE NEW WALLS OCCUR IN LINE WITH EXISTING WALLS.

I. SEAL AROUND ALL MECHANICAL AND ELECTRICAL EQUIPMENT PENETRATIONS AT WALLS. AT RATED WALLS USE A U.L. APPROVED FIRE-STOPPING MATERIAL.

J. PROVIDE 4" DOOR JAMBS FROM FACE-OF-FINISH AT ADJACENT WALLS ON THE HINGE SIDE OR UNLESS OTHERWISE INDICATED.

K. DIMENSIONS ARE TO GRID LINE OR FACE OF STRUCTURAL MEMBER UNLESS OTHERWISE NOTED. DOOR & WINDOW OPENING DIMENSIONS ARE TO ROUGH OPENING OR CENTERLINE OF OPENING. CONCRETE AND BRICK DIMENSIONS ARE GIVEN TO THE FACE OF CONCRETE OR MASONRY AND TO THE FACE OF ROUGH OPENINGS.

L. PROVIDE UNDERSLAB VAPOR RETARDER. VAPOR RETARDER TO HAVE PERMEANCE RATING LESS THAN 0.1 PERMS. VAPOR RETARDER TO MEET OR EXCEED REQUIREMENTS OF ASTM E1745, CLASS 'A'.

M. SLOPE CONCRETE SLAB @ 1/8" PER FOOT TO FLOOR DRAIN. RE: PLUMBING DRAWINGS FOR ADDITIONAL INFORMATION. PROVIDE SLOPED FLOORS IN THE FOLLOWING ROOMS: 104, 106, 108, 118, 119, 120, 121, 127, 128, 136 & 137.

KEY NOTES:

1. SLOPE CONCRETE SLAB 1/8" PER 1'-0" TO TRENCH DRAINS, RE: PLUMBING DRAWINGS
2. RIDGE OF SLOPED SLAB
3. ROLL UP APPARATUS BAY DOORS
4. FOLDING APPARATUS BAY DOORS
5. 6" BOLLARD, RE: BOLLARD DETAIL SHEET A102
6. WALL MOUNTED BUNKER GEAR STORAGE
7. FREE STANDING BUNKER GEAR STORAGE.
8. GALVANIZED FLOOR GRATE, SEE DETAIL 8/406
9. TRENCH DRAIN, RE: MECHANICAL DRAWINGS AND DETAIL
10. HAND SINK, RE: MECHANICAL DRAWINGS AND DETAIL
11. FIRE POLE
12. ICE MACHINE, OWNER PROVIDED, CONTRACTOR INSTALLED
13. EMERGENCY GENERATOR, RE: ELECTRICAL DRAWINGS
14. OWNER PROVIDED SCUBA REFILL EQUIPMENT, CONTRACTOR INSTALLED
15. OWNER PROVIDED EMS EQUIPMENT, CONTRACTOR INSTALLED
16. BREAK BAR
17. BUILT IN CASEWORK, SEE ELEVATIONS AND DETAILS
18. FIRE EXTINGUISHER, RE: G SERIES SHEETS
19. PASS-THROUGH CABINETS, RE: SHEET A904
20. BED FRAME AND MATTRESS BY OWNER - OWNER INSTALLED. SEE SHEET A905.
21. 8'x4' SLAB RECESSED WALK OFF MAT
22. FIRE TREATED A.C. PLYWOOD, 96" A.F.F. @ WALL INDICATED. PAINT WHITE
23. WALL MOUNTED, HI-LO ADA COMPLIANT DRINKING FOUNTAIN, AS SPECIFIED
24. FLOOR MOUNTED MOP SINK, RE: MECHANICAL DRAWINGS

ARCHITECT:

COLE ARCHITECTS

COLE ARCHITECTS | 802 W. BANNOCK SUIT 208
Boise, ID 83702 | (208) 345-1800

TCA architecture • planning
TCA | 6211 Roosevelt Way NE
Seattle, WA 98115 | (206) 522-3820

STAMP:

NOT FOR CONSTRUCTION

CONSULTANT:

PROJECT INFORMATION:

City of Boise Fire Station 4

8485 W Ustick Rd, Boise, ID 83704

REVISIONS:

MARK	DATE	DESCRIPTION

PROJECT PHASE	75% CD'S
PROJECT NUMBER	15-27
PROJECT MANAGER	J. Chatfield
PROJECT ARCHITECT	J. Chatfield
DESIGN	J. Chatfield
DRAWN BY	J. Chatfield, C. Clay, R. Stewart

SHEET NAME:

1ST FLOOR PLAN

SHEET NUMBER:

A200

02.02.16

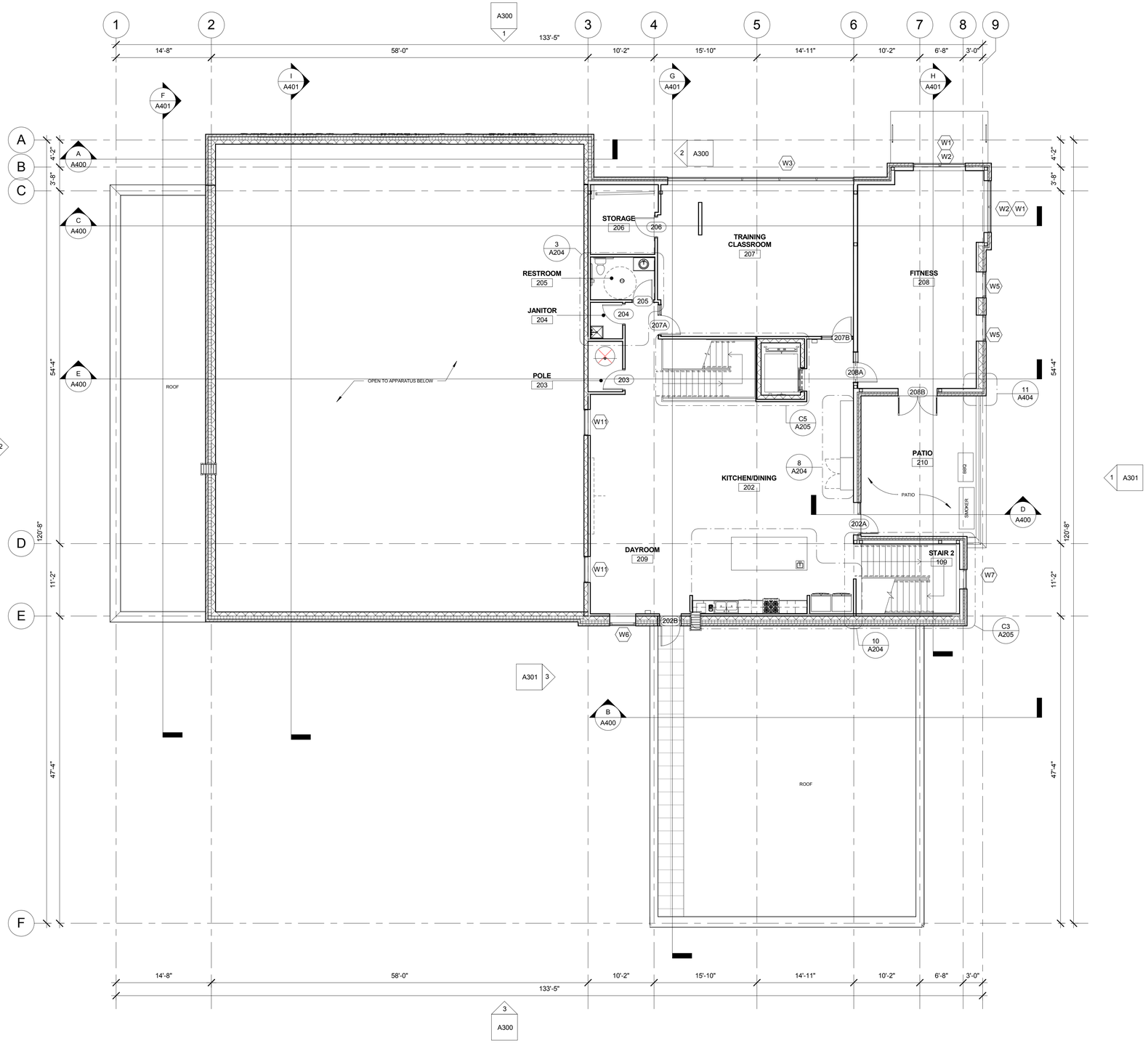

2ND FLOOR PLAN

1/8" = 1'-0"

NORTH

GENERAL NOTES FLOOR PLAN:

A. GENERAL NOTES APPLY TO ALL DRAWING SETS.

B. RE: SHEET A700 FOR DOOR TYPES & SCHEDULE.

C. RE: SHEET A701 FOR WINDOW TYPES.

D. RE: DIMENSION PLANS, WALL TYPES & DETAILS.

E. CROSS REFERENCES SHOWN ON DRAWINGS DO NOT NECESSARILY INDICATE ALL LIKE CONDITIONS AND DO NOT LIMIT APPLICATION OF ANY DRAWING OR DETAIL. WHERE SPECIFIC DIMENSIONS, DETAILS, OR DESIGN INTENT CANNOT BE DETERMINED, CONSULT THE ARCHITECT PRIOR TO PROCEEDING WITH WORK. IF DESIGN INTENT REMAINS UNCLEAR THEN PROVIDE MOST EXPENSIVE OPTION IN BID.

F. PROVIDE SOLID BLOCKING IN WALLS FOR ALL WALL HUNG EQUIPMENT. BLOCKING TO MEET OR EXCEED MANUFACTURER'S RECOMMENDATIONS. FASTEN EQUIPMENT TO WALLS PER MANUFACTURER'S RECOMMENDATIONS. PROVIDE BLOCKING FOR, BUT NOT LIMITED TO THE FOLLOWING: MILLWORK, RAILING, FIRE EXTINGUISHER ACCESSORIES, WALL MOUNTED PLUMBING FIXTURES, SHELVING, ELECTRICAL EQUIPMENT, RESTROOM ACCESSORIES AND DISPLAY ITEMS.

G. CAULK ALL COUNTERTOPS, BACKSLASHES AND CABINETS AT LOCATIONS WHERE THEY MEET WALLS. SEAL ALL CUT-OUTS IN COUNTERTOPS.

H. MATCH FINISHED WALL THICKNESS WHERE NEW WALLS OCCUR IN LINE WITH EXISTING WALLS.

I. SEAL AROUND ALL MECHANICAL AND ELECTRICAL EQUIPMENT PENETRATIONS AT WALLS. AT RATED WALLS USE A U.L. APPROVED FIRE-STOPPING MATERIAL.

J. PROVIDE 4" DOOR JAMBS FROM FACE-OF-FINISH AT ADJACENT WALLS ON THE HINGE SIDE OR UNLESS OTHERWISE INDICATED.

K. DIMENSIONS ARE TO GRID LINE OR FACE OF STRUCTURAL MEMBER UNLESS OTHERWISE NOTED. DOOR & WINDOW OPENING DIMENSIONS ARE TO ROUGH OPENING OR CENTERLINE OF OPENING. CONCRETE AND BRICK DIMENSIONS ARE GIVEN TO THE FACE OF CONCRETE OR MASONRY AND TO THE FACE OF ROUGH OPENINGS.

L. PROVIDE UNDERSLAB VAPOR RETARDER. VAPOR RETARDER TO HAVE PERMEANCE RATING LESS THAN 0.1 PERMS. VAPOR RETARDER TO MEET OR EXCEED REQUIREMENTS OF ASTM E1745, CLASS 'A'.

M. SLOPE CONCRETE SLAB @ 1/8" PER FOOT TO FLOOR DRAIN. RE: PLUMBING DRAWINGS FOR ADDITIONAL INFORMATION. PROVIDE SLOPED FLOORS IN THE FOLLOWING ROOMS: 104, 106, 108, 118, 119, 120, 121, 127, 128, 136 & 137.

KEY NOTES:

1. XXX

ARCHITECT:

COLE ARCHITECTS

COLE ARCHITECTS | 802 W. BANNOCK SUIT 208
Boise, ID 83702 | (208) 345-1800

TCA architecture • planning

TCA | 6211 Roosevelt Way NE
Seattle, WA 98115 | (206) 522-3820

STAMP:

NOT FOR CONSTRUCTION

CONSULTANT:

PROJECT INFORMATION:

City of Boise Fire Station 4

8485 W Ustick Rd, Boise, ID 83704

REVISIONS:

MARK	DATE	DESCRIPTION

PROJECT PHASE	75% CD'S
PROJECT NUMBER	15-27
PROJECT MANAGER	J. Chatfield
PROJECT ARCHITECT	J. Chatfield
DESIGN	J. Chatfield
DRAWN BY	J. Chatfield, C. Clay, R. Stewart

SHEET NAME:

2ND FLOOR PLAN

SHEET NUMBER:

A201

02.02.16

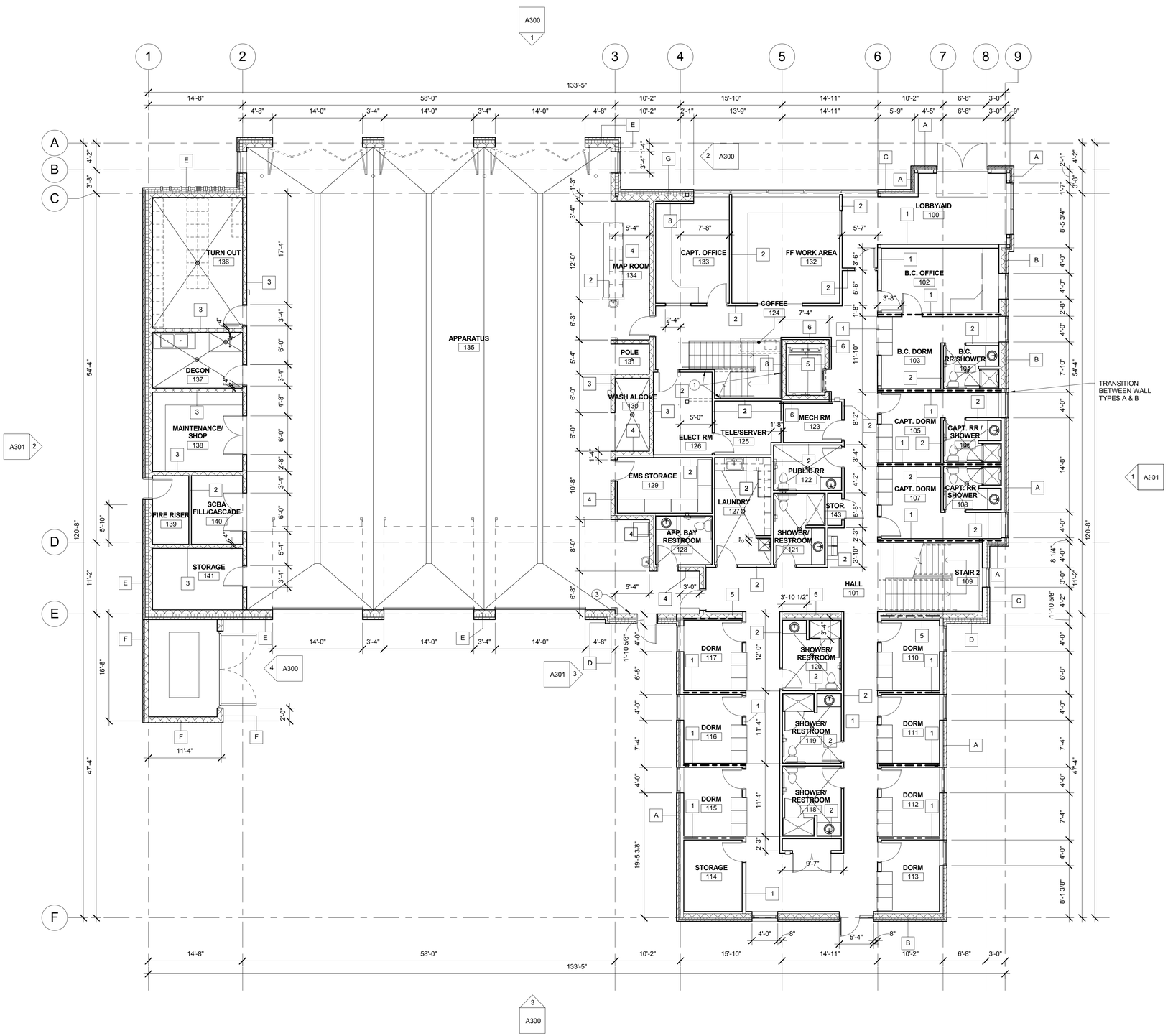

1ST FLOOR DIMENSION PLAN
1/8" = 1'-0"

NORTH

GENERAL NOTES DIMENSION PLAN:

A. DIMENSIONS ARE TO GRID LINE OR FACE OF STRUCTURAL MEMBER UNLESS OTHERWISE NOTED. DOOR & WINDOW OPENING DIMENSIONS ARE TO ROUGH OPENING OR CENTERLINE OF OPENING. CONCRETE AND BRICK DIMENSIONS ARE GIVEN TO THE FACE OF CONCRETE OR MASONRY AND TO THE FACE OF ROUGH OPENINGS.

B. FIELD VERIFY ALL DIMENSIONS AND EXISTING CONDITIONS (IF APPLICABLE). CREATE DIMENSION TEMPLATE BEFORE BEGINNING CONSTRUCTION. NOTIFY ARCHITECT IMMEDIATELY IF ANY CONFLICTS OR DISCREPANCIES WITHIN DRAWINGS OCCUR BEFORE PROCEEDING WITH WORK.

C. LAYOUT & INDICATE ALL WALLS ON FLOOR PRIOR TO WALL CONSTRUCTION. IF LAYOUT DIFFERS FROM FLOOR PLAN NOTIFY ARCHITECT IMMEDIATELY FOR DIRECTION.

D. PROVIDE 4" DOOR JAMBS AT ADJACENT WALLS ON THE DOOR'S HINGE SIDE OR UNLESS OTHERWISE INDICATED.

E. REFERENCE STRUCTURAL DRAWINGS FOR ADDITIONAL WALL REQUIREMENTS.

F. SEE SHEET A600 & A601 FOR INTERIOR AND EXTERIOR WALL TYPES AND DETAILS.

KEY NOTES:

1. ALIGN FINISHED WALL TIGHT TO STRINGER.

2. AT COFFEE BAR FRAME WALLS TO CREATE A NOOK FOR CASEWORK. SEE ELEVATIONS AND DETAILS FOR CASEWORK SIZE.

3. NO METAL STUD WALL OR GYPSUM BOARD FURRING ON WALL TYPE D IN APP. BAY.

ARCHITECT:

COLE ARCHITECTS

COLE ARCHITECTS | 802 W. BANNOCK SUIT 208
Boise, ID 83702 | (208) 345-1800

TCA architecture • planning
TCA | 6211 Roosevelt Way NE
Seattle, WA 98115 | (206) 522-3820

STAMP:

NOT FOR CONSTRUCTION

CONSULTANT:

PROJECT INFORMATION:

City of Boise Fire Station 4

8485 W Ustick Rd, Boise, ID 83704

REVISIONS:

MARK	DATE	DESCRIPTION

PROJECT PHASE	75% CD'S
PROJECT NUMBER	15-27
PROJECT MANAGER	J. Chatfield
PROJECT ARCHITECT	J. Chatfield
DESIGN	J. Chatfield
DRAWN BY	J. Chatfield, C. Clay, R. Stewart

SHEET NAME:

1ST FLOOR DIMENSION PLAN

SHEET NUMBER:

A202

02.02.16

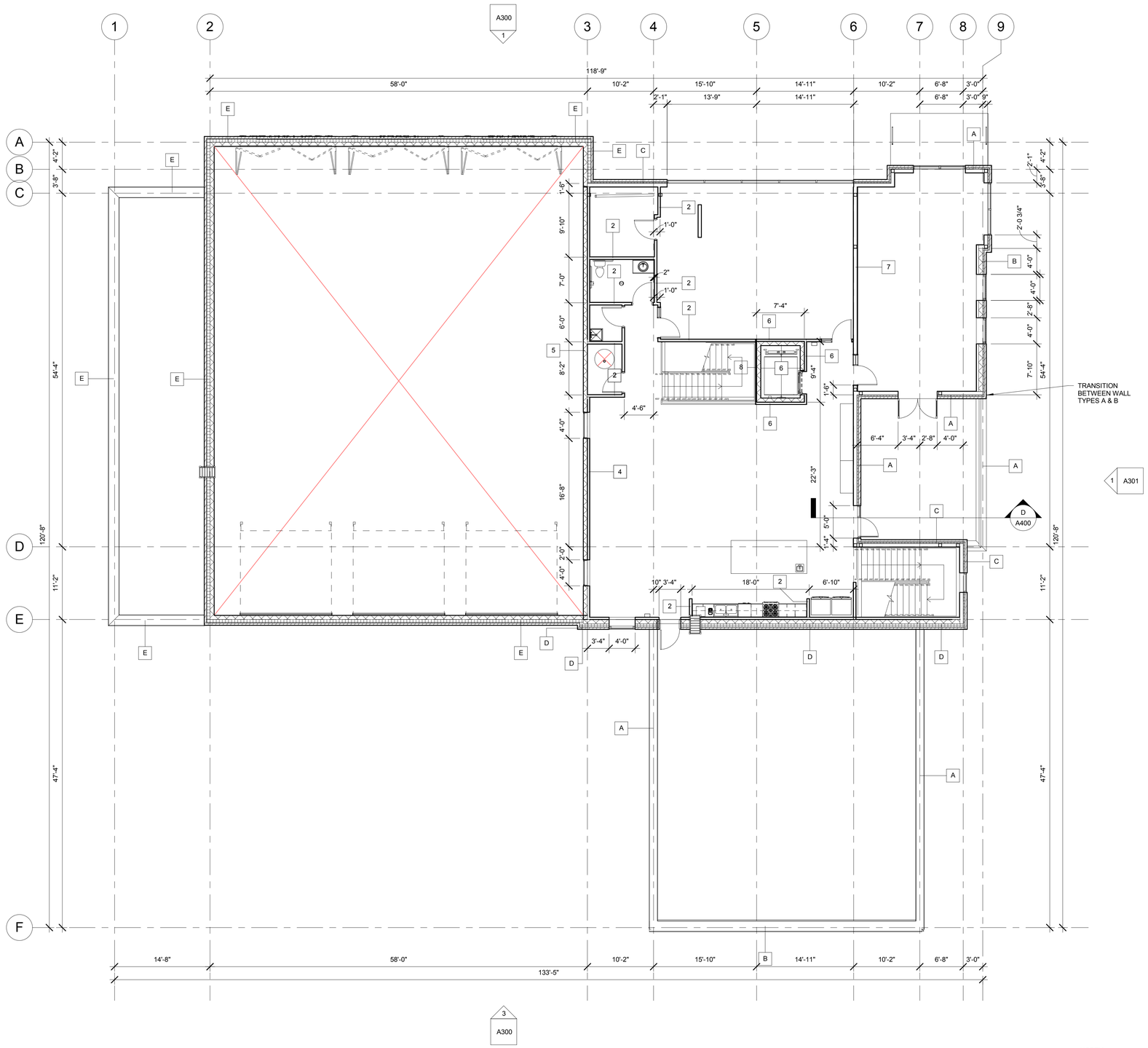

2ND FLOOR DIMENSION PLAN
1/8" = 1'-0"

GENERAL NOTES DIMENSION PLAN:

A. DIMENSIONS ARE TO GRID LINE OR FACE OF STRUCTURAL MEMBER UNLESS OTHERWISE NOTED. DOOR & WINDOW OPENING DIMENSIONS ARE TO ROUGH OPENING OR CENTERLINE OF OPENING. CONCRETE AND BRICK DIMENSIONS ARE GIVEN TO THE FACE OF CONCRETE OR MASONRY AND TO THE FACE OF ROUGH OPENINGS.

B. FIELD VERIFY ALL DIMENSIONS AND EXISTING CONDITIONS (IF APPLICABLE). CREATE DIMENSION TEMPLATE BEFORE BEGINNING CONSTRUCTION. NOTIFY ARCHITECT IMMEDIATELY IF ANY CONFLICTS OR DISCREPANCIES WITHIN DRAWINGS OCCUR BEFORE PROCEEDING WITH WORK.

C. LAYOUT & INDICATE ALL WALLS ON FLOOR PRIOR TO WALL CONSTRUCTION. IF LAYOUT DIFFERS FROM FLOOR PLAN NOTIFY ARCHITECT IMMEDIATELY FOR DIRECTION.

D. PROVIDE 4" DOOR JAMBS AT ADJACENT WALLS ON THE DOOR'S HINGE SIDE OR UNLESS OTHERWISE INDICATED.

E. REFERENCE STRUCTURAL DRAWINGS FOR ADDITIONAL WALL REQUIREMENTS.

F. SEE SHEET A600 & A601 FOR INTERIOR AND EXTERIOR WALL TYPES AND DETAILS.

KEY NOTES:

1. XXX

ARCHITECT:

COLE ARCHITECTS

COLE ARCHITECTS | 802 W. BANNOCK SUIT 208
Boise, ID 83702 | (208) 345-1800

TCA architecture • planning

TCA | 6211 Roosevelt Way NE
Seattle, WA 98115 | (206) 522-3820

STAMP:

NOT FOR CONSTRUCTION

CONSULTANT:

PROJECT INFORMATION:

BOISE CITY OF TREES

BOISE FIRE DEDICATION

City of Boise Fire Station 4

8485 W Ustick Rd, Boise, ID 83704

REVISIONS:

MARK	DATE	DESCRIPTION

PROJECT PHASE	75% CD'S
PROJECT NUMBER	15-27
PROJECT MANAGER	J. Chatfield
PROJECT ARCHITECT	J. Chatfield
DESIGN	J. Chatfield
DRAWN BY	J. Chatfield, C. Clay, R. Stewart

SHEET NAME:

2ND FLOOR DIMENSION PLAN

SHEET NUMBER:

A203

02.02.16

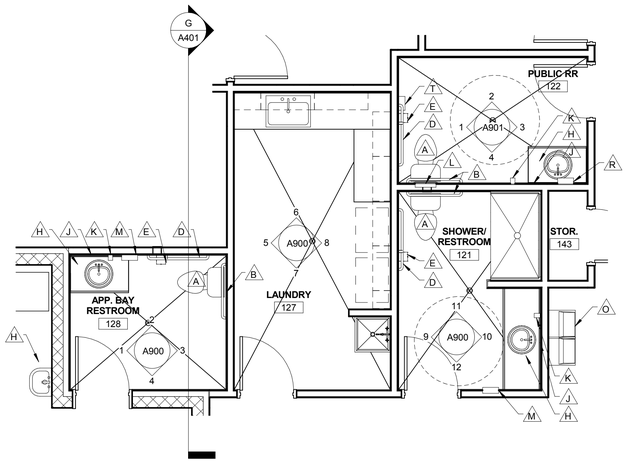

1 ENLARGED FLOOR PLAN 1
1/4" = 1'-0"

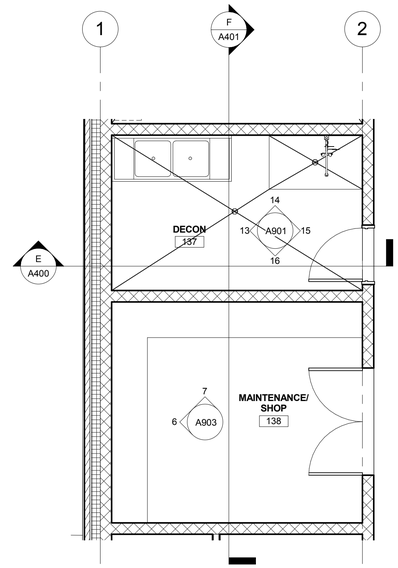

2 ENLARGED FLOOR PLAN 2
1/4" = 1'-0"

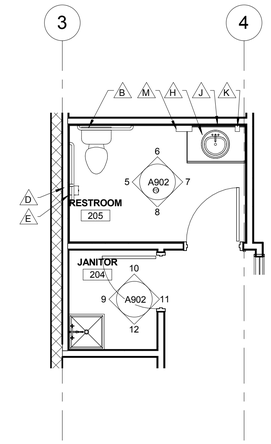

3 ENLARGED FLOOR PLAN 3
1/4" = 1'-0"

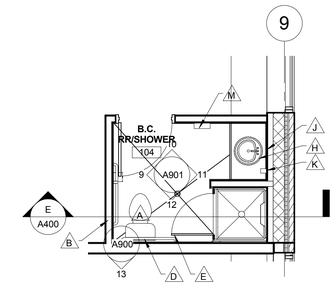

4 ENLARGED FLOOR PLAN 4
1/4" = 1'-0"

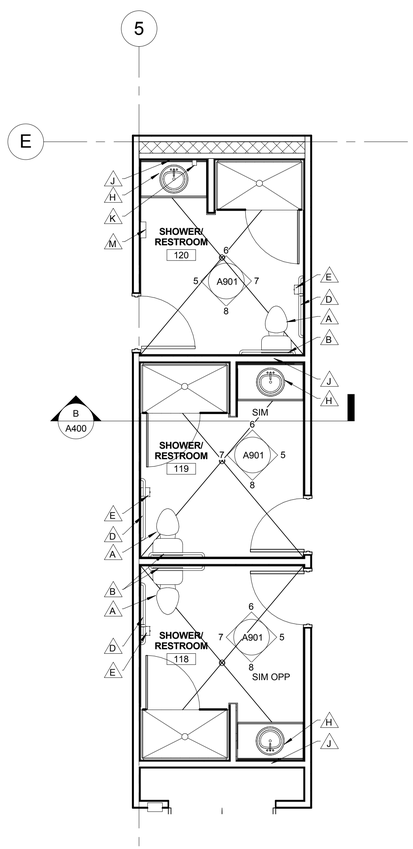

5 ENLARGED FLOOR PLAN 5
1/4" = 1'-0"

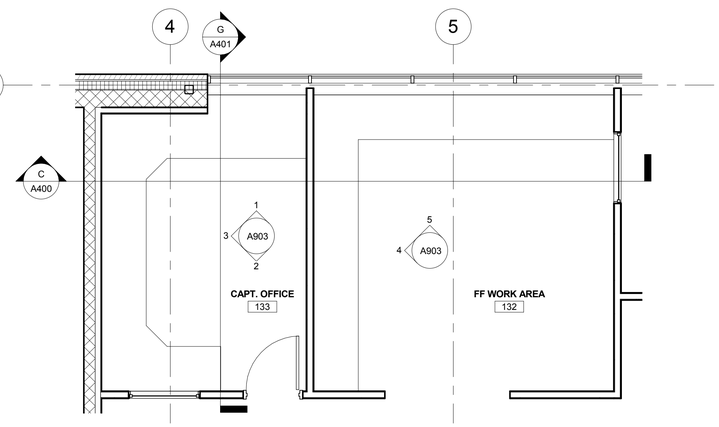

6 ENLARGED FLOOR PLAN 8
1/4" = 1'-0"

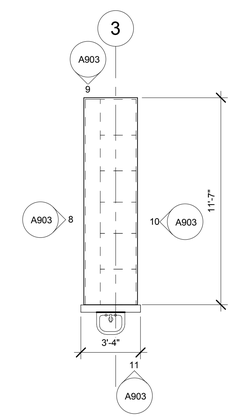

7 ENLARGED FLOOR PLAN 9
1/4" = 1'-0"

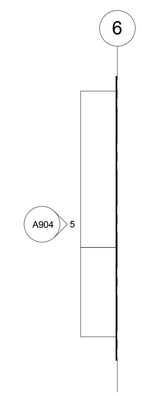

8 ENLARGED PLAN 10
1/4" = 1'-0"

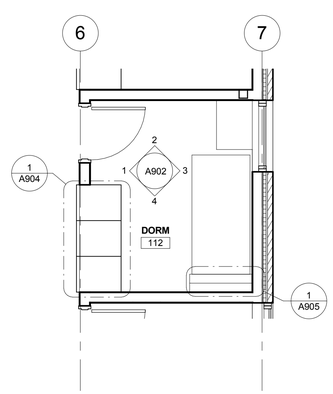

9 ENLARGED FLOOR PLAN 6
1/4" = 1'-0"

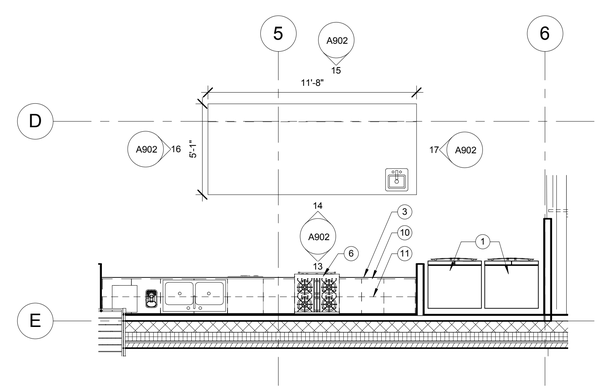

10 ENLARGED FLOOR PLAN 7
1/4" = 1'-0"

GENERAL NOTES ENLARGED PLANS:

A. REFERENCE SHEET A900 FOR PLUMBING FIXTURE MOUNTING HEIGHTS.

KEY NOTES:

1. REFRIGERATOR, AS SPECIFIED.
2. DISHWASHER, AS SPECIFIED.
3. 25" DP. STAINLESS STEEL CTOP W/ INTEGRAL 42" DOUBLE BOWL SINK.
4. COFFEE MAKER, BY OWNER.
5. COUNTERTOP MICROWAVE, BY OWNER.
6. 30" GAS RANGE/STOVE, AS SPECIFIED.
7. 30" UNDER CAB, VENT HOOD.
8. 15" ICE MAKER, AS SPECIFIED.
9. STAINLESS STEEL CTOP W/ INTEGRAL BAR SINK, AS SPECIFIED.
10. P-LAM BASE CABINETS
11. P-LAM WALL CABINETS
12.

ARCHITECT:

COLE ARCHITECTS

COLE ARCHITECTS | 802 W. BANNOCK SUIT 208
Boise, ID 83702 | (208) 345-1800

TCA architecture • planning

TCA | 6211 Roosevelt Way NE
Seattle, WA 98115 | (206) 522-3820

STAMP:

NOT FOR CONSTRUCTION

CONSULTANT:

PROJECT INFORMATION:

City of Boise Fire Station 4

8485 W Ustick Rd, Boise, ID 83704

REVISIONS:

MARK	DATE	DESCRIPTION

PROJECT PHASE	75% CD'S
PROJECT NUMBER	15-27
PROJECT MANAGER	J. Chatfield
PROJECT ARCHITECT	J. Chatfield
DESIGN	J. Chatfield
DRAWN BY	J. Chatfield, C. Clay, R. Stewart

SHEET NAME:

ENLARGED PLANS

SHEET NUMBER:

A204

02.02.16

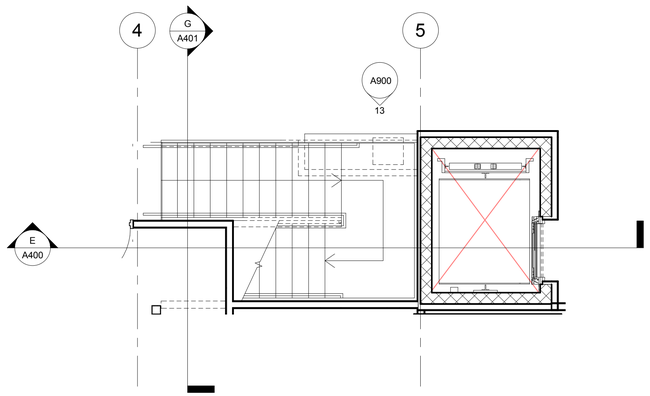

B5 1ST FLOOR PLAN - STAIR 200
1/4" = 1'-0"

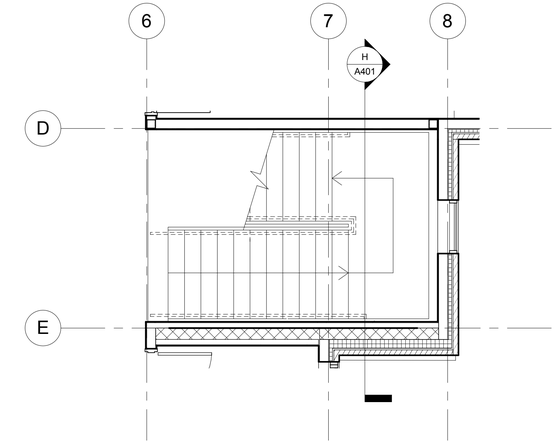

B3 1ST FLOOR PLAN - STAIR 109
1/4" = 1'-0"

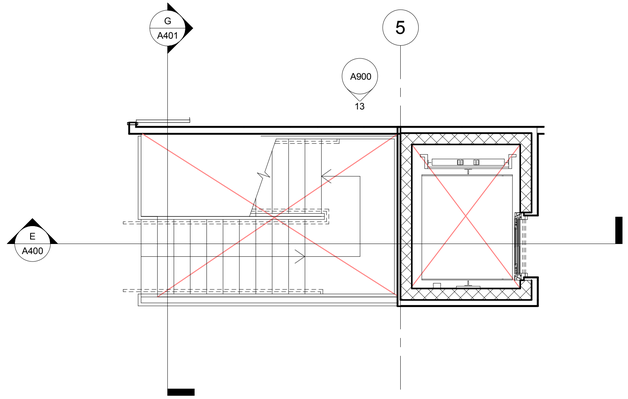

C5 2ND FLOOR PLAN - STAIR 200
1/4" = 1'-0"

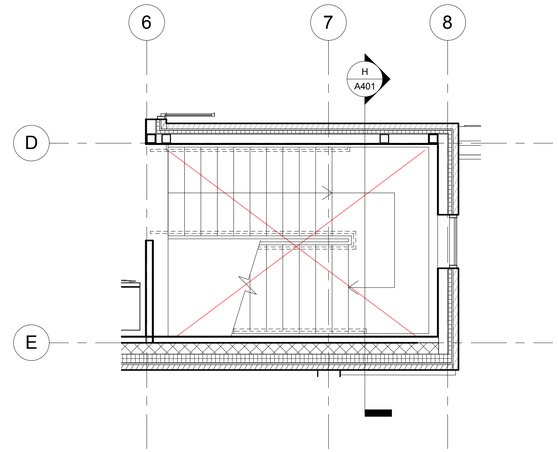

C3 2ND FLOOR PLAN - STAIR 109
1/4" = 1'-0"

ARCHITECT:

COLE ARCHITECTS

COLE ARCHITECTS | 802 W. BANNOCK SUIT 208
Boise, ID 83702 | (208) 345-1800

TCA architecture • planning

TCA | 6211 Roosevelt Way NE
Seattle, WA 98115 | (206) 522-3820

STAMP:

NOT FOR CONSTRUCTION

CONSULTANT:

PROJECT INFORMATION:

City of Boise Fire Station 4

8485 W Ustick Rd, Boise, ID 83704

REVISIONS:

MARK	DATE	DESCRIPTION

PROJECT PHASE	75% CD'S
PROJECT NUMBER	15-27
PROJECT MANAGER	J. Chatfield
PROJECT ARCHITECT	J. Chatfield
DESIGN	J. Chatfield
DRAWN BY	J. Chatfield, C. Clay, R. Stewart

SHEET NAME:

ENLARGED STAIR PLANS AND DETAILS

SHEET NUMBER:

A205

02.02.16

GENERAL NOTES EXT. ELEVATIONS:

A. GENERAL NOTES APPLY TO ALL DRAWING SETS.

B. RE: SHEET A700 FOR DOOR TYPES & SCHEDULE.

C. RE: SHEET A701 FOR WINDOW TYPES.

D. FIELD VERIFY ALL DIMENSIONS AND EXISTING CONDITIONS. NOTIFY ARCHITECT IMMEDIATELY IF ANY CONFLICTS OR DISCREPANCIES OCCUR BEFORE PROCEEDING WITH WORK.

E. CROSS REFERENCES SHOWN ON DRAWINGS DO NOT NECESSARILY INDICATE ALL LIKE CONDITIONS AND DO NOT LIMIT APPLICATION OF ANY DRAWING OR DETAIL. WHERE SPECIFIC DIMENSIONS, DETAILS, OR DESIGN INTENT CANNOT BE DETERMINED, CONSULT THE ARCHITECT PRIOR TO PROCEEDING WITH WORK. IF DESIGN INTENT REMAINS UNCLEAR THEN PROVIDE MOST EXPENSIVE OPTION IN BID.

F. DIMENSIONS ARE TO GRID LINE OR FACE OF STRUCTURAL MEMBER UNLESS OTHERWISE NOTED. DOOR & WINDOW OPENING DIMENSIONS ARE TO ROUGH OPENING OR CENTERLINE OF OPENING. CONCRETE AND BRICK DIMENSIONS ARE GIVEN TO THE FACE OF CONCRETE OR MASONRY AND TO THE FACE OF ROUGH OPENINGS.

G. UNLESS NOTED OTHERWISE, USE BASF MASTERSEAL NP 150 FOR SEALANT AT ABOVE GRADE EXTERIOR JOINTS. COORDINATE COLOR W/ ARCHITECT. FOR BELOW GRADE APPLICATIONS USE DE NEEF SWELLSEAL WA.

H. INSTALL FENESTRATION PRODUCTS SUCH AS, EXTERIOR WINDOWS, DOORS AND SKYLIGHTS, PER GUIDELINES ESTABLISHED IN ASTM E 2112-01. REFERENCE GUIDE FOR INSTALLATION DETAILS AND TECHNIQUES. FOR WATER PROOFING AND WEATHER BARRIER INSTALLATION.

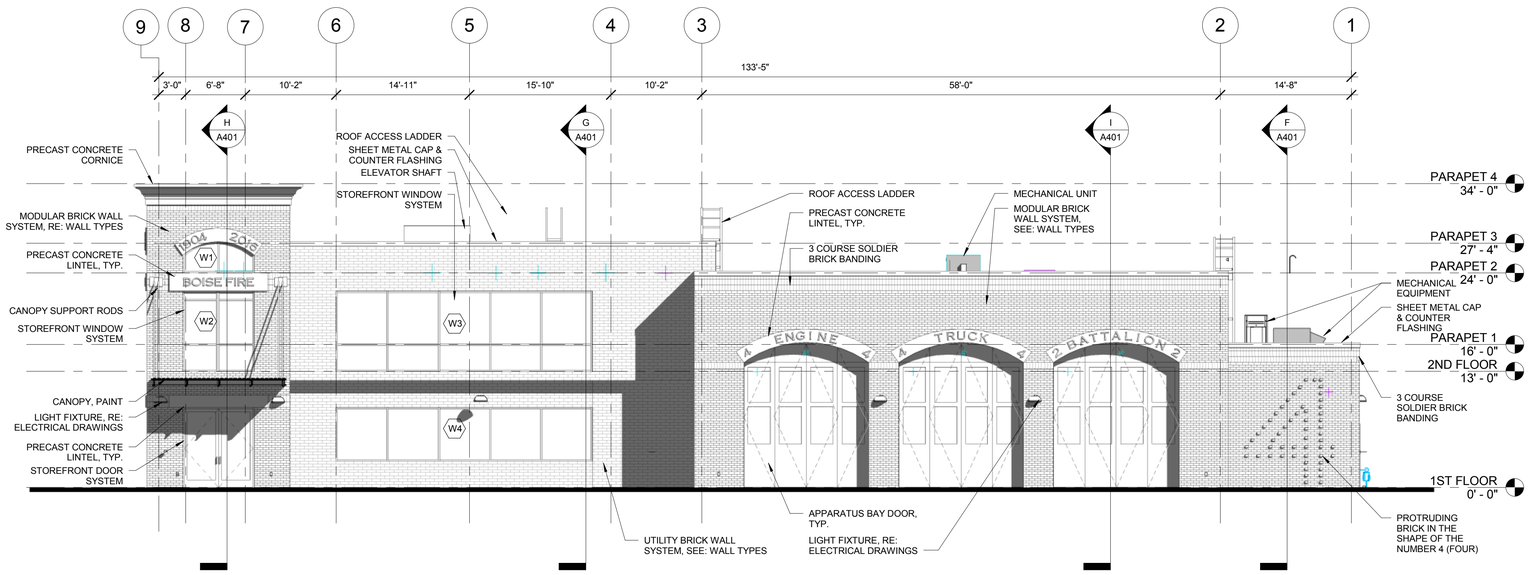

1 NORTH ELEVATION
1/8" = 1'-0"

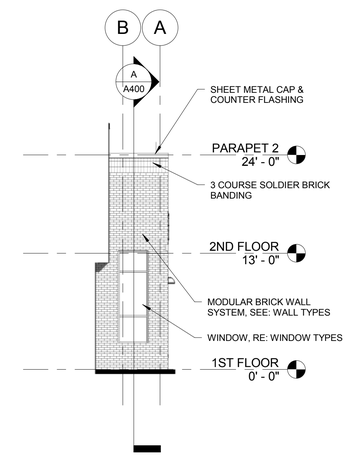

2 APPARATUS BAY WEST
1/8" = 1'-0"

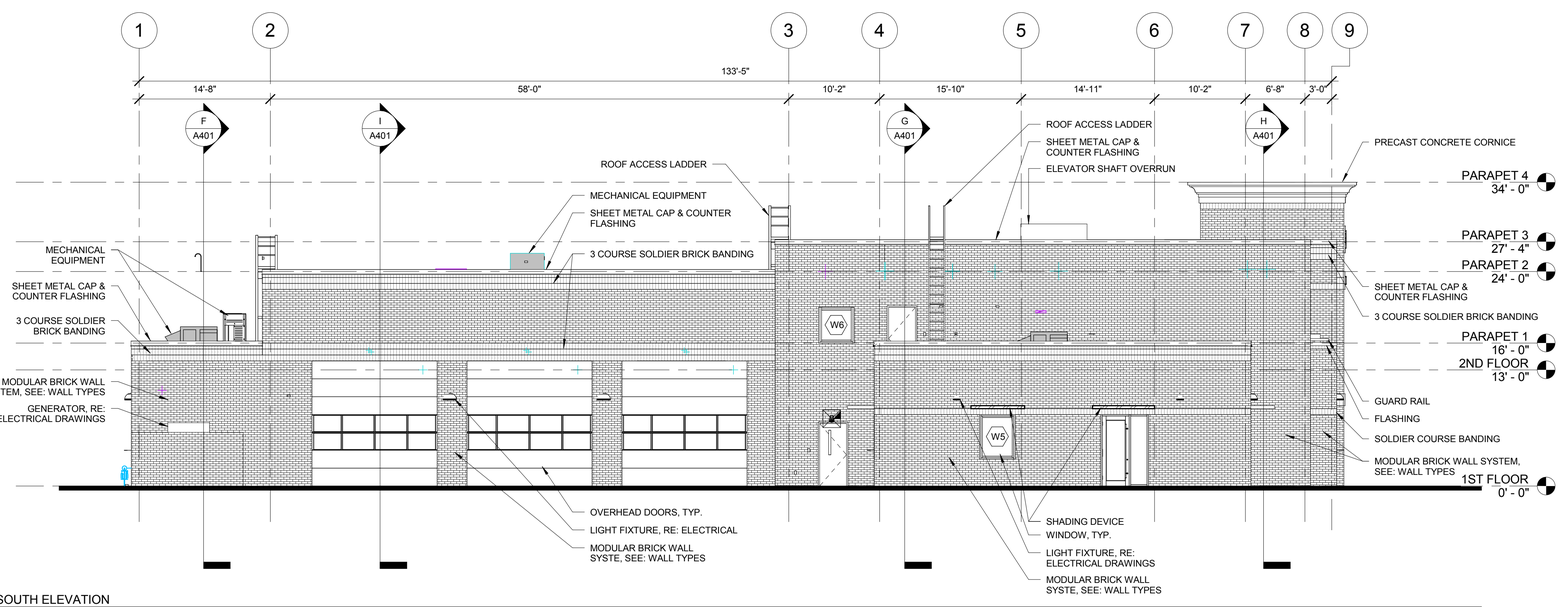

3 SOUTH ELEVATION
1/8" = 1'-0"

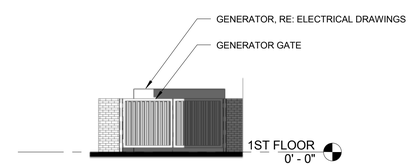

4 GENERATOR WEST
1/8" = 1'-0"

ARCHITECT:

COLE ARCHITECTS

COLE ARCHITECTS | 802 W. BANNOCK SUIT 208
Boise, ID 83702 | (208) 345-1800

TCA architecture • planning

TCA | 6211 Roosevelt Way NE
Seattle, WA 98115 | (206) 522-3820

STAMP:

NOT FOR CONSTRUCTION

CONSULTANT:

PROJECT INFORMATION:

BOISE CITY OF TREES

BOISE FIRE Est. 1878 DEDICATION

City of Boise Fire Station 4

8485 W Ustick Rd, Boise, ID 83704

REVISIONS:

MARK	DATE	DESCRIPTION

PROJECT PHASE	75% CD'S
PROJECT NUMBER	15-27
PROJECT MANAGER	J. Chatfield
PROJECT ARCHITECT	J. Chatfield
DESIGN	J. Chatfield
DRAWN BY	J. Chatfield, C. Clay, R. Stewart

SHEET NAME:

EXTERIOR ELEVATIONS

SHEET NUMBER:

A300

02.02.16

GENERAL NOTES EXT. ELEVATIONS:

A. GENERAL NOTES APPLY TO ALL DRAWING SETS.

B. RE: SHEET A700 FOR DOOR TYPES & SCHEDULE.

C. RE: SHEET A701 FOR WINDOW TYPES.

D. FIELD VERIFY ALL DIMENSIONS AND EXISTING CONDITIONS. NOTIFY ARCHITECT IMMEDIATELY IF ANY CONFLICTS OR DISCREPANCIES OCCUR BEFORE PROCEEDING WITH WORK.

E. CROSS REFERENCES SHOWN ON DRAWINGS DO NOT NECESSARILY INDICATE ALL LIKE CONDITIONS AND DO NOT LIMIT APPLICATION OF ANY DRAWING OR DETAIL. WHERE SPECIFIC DIMENSIONS, DETAILS, OR DESIGN INTENT CANNOT BE DETERMINED, CONSULT THE ARCHITECT PRIOR TO PROCEEDING WITH WORK. IF DESIGN INTENT REMAINS UNCLEAR THEN PROVIDE MOST EXPENSIVE OPTION IN BID.

F. DIMENSIONS ARE TO GRID LINE OR FACE OF STRUCTURAL MEMBER UNLESS OTHERWISE NOTED. DOOR & WINDOW OPENING DIMENSIONS ARE TO ROUGH OPENING OR CENTERLINE OF OPENING. CONCRETE AND BRICK DIMENSIONS ARE GIVEN TO THE FACE OF CONCRETE OR MASONRY AND TO THE FACE OF ROUGH OPENINGS.

G. UNLESS NOTED OTHERWISE, USE BASF MASTERSEAL NP 150 FOR SEALANT AT ABOVE GRADE EXTERIOR JOINTS. COORDINATE COLOR W/ ARCHITECT. FOR BELOW GRADE APPLICATIONS USE DE NEEF SWELLSEAL WA.

H. INSTALL FENESTRATION PRODUCTS SUCH AS, EXTERIOR WINDOWS, DOORS AND SKYLIGHTS, PER GUIDELINES ESTABLISHED IN ASTM E 2112-01. REFERENCE GUIDE FOR INSTALLATION DETAILS AND TECHNIQUES FOR WATER PROOFING AND WEATHER BARRIER INSTALLATION.

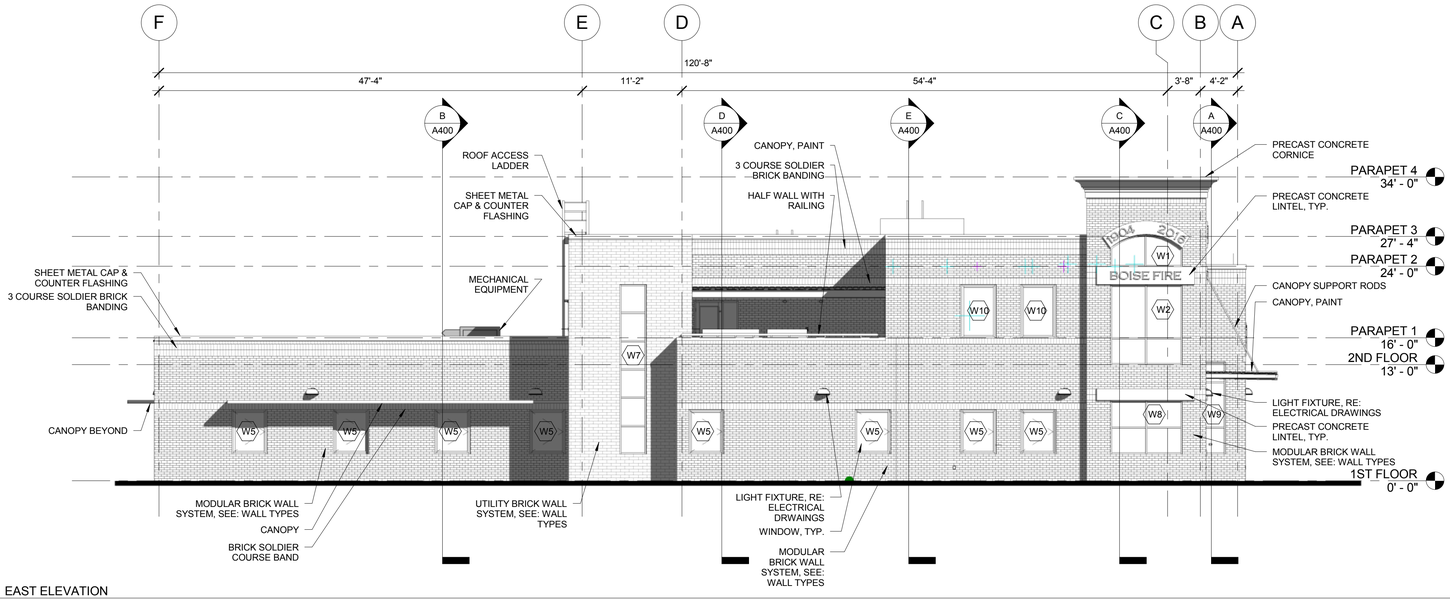

1 EAST ELEVATION
1/8" = 1'-0"

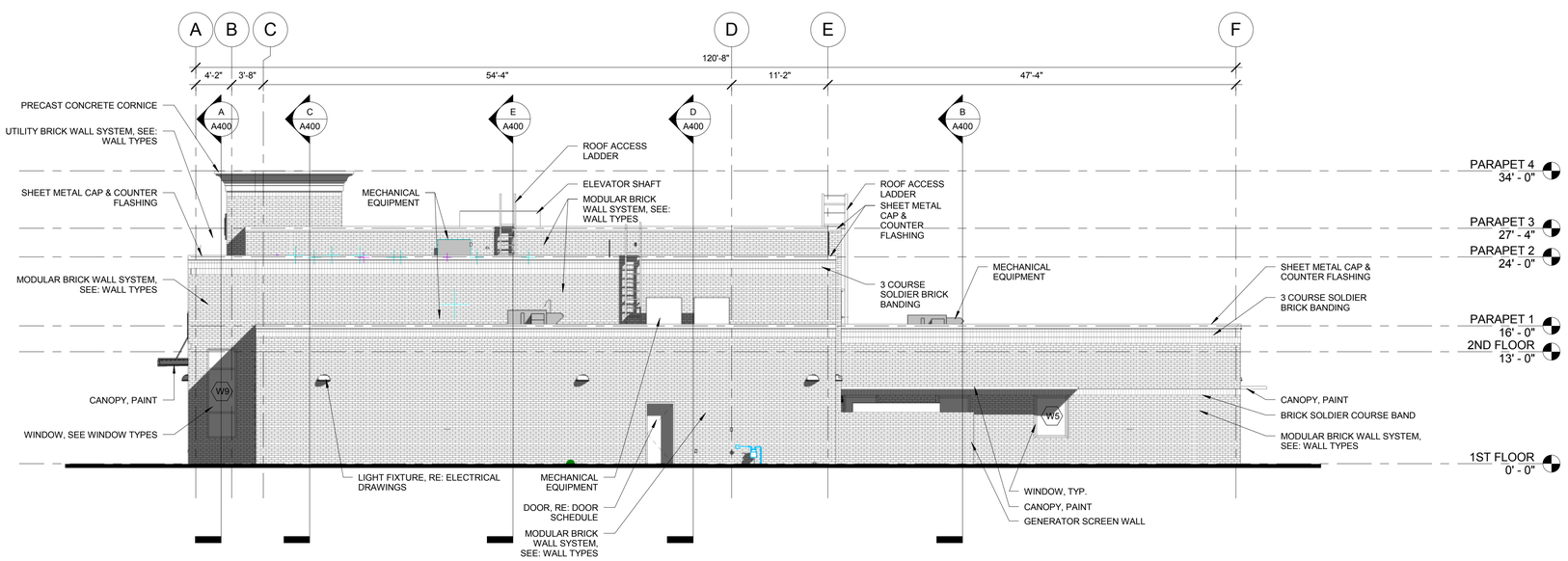

2 WEST ELEVATION
1/8" = 1'-0"

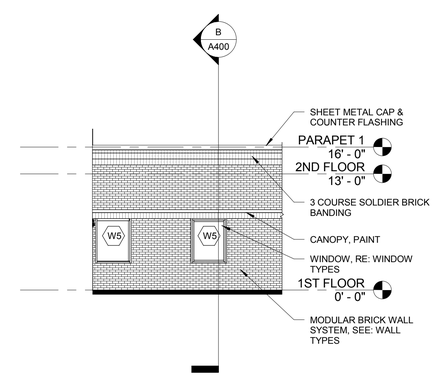

3 SLEEPING WING EAST
1/8" = 1'-0"

ARCHITECT:

COLE ARCHITECTS

COLE ARCHITECTS | 802 W. BANNOCK SUIT 208
Boise, ID 83702 | (208) 345-1800

TCA architecture • planning

TCA | 6211 Roosevelt Way NE
Seattle, WA 98115 | (206) 522-3820

STAMP:

NOT FOR CONSTRUCTION

CONSULTANT:

PROJECT INFORMATION:

BOISE CITY OF TREES

BOISE FIRE Est. 1870 DEDICATION

City of Boise Fire Station 4

8485 W Ustick Rd, Boise, ID 83704

REVISIONS:

MARK	DATE	DESCRIPTION

PROJECT PHASE	75% CD'S
PROJECT NUMBER	15-27
PROJECT MANAGER	J. Chatfield
PROJECT ARCHITECT	J. Chatfield
DESIGN	J. Chatfield
DRAWN BY	J. Chatfield, C. Clay, R. Stewart

SHEET NAME:

EXTERIOR ELEVATIONS

SHEET NUMBER:

A301

02.02.16

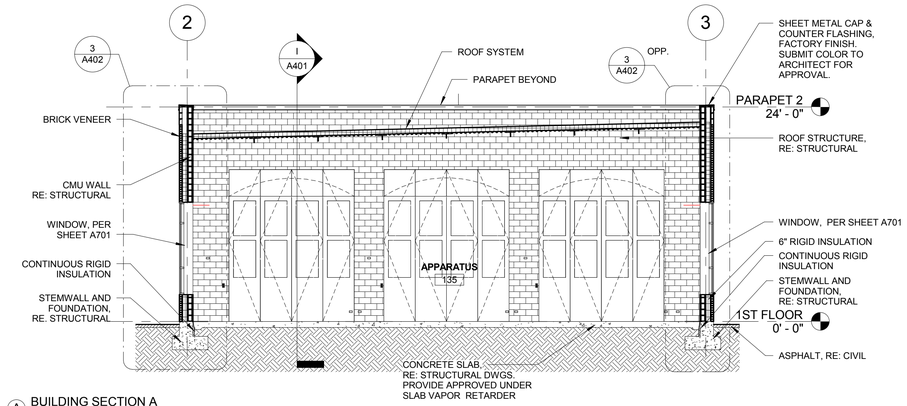

A BUILDING SECTION A
1/8" = 1'-0"

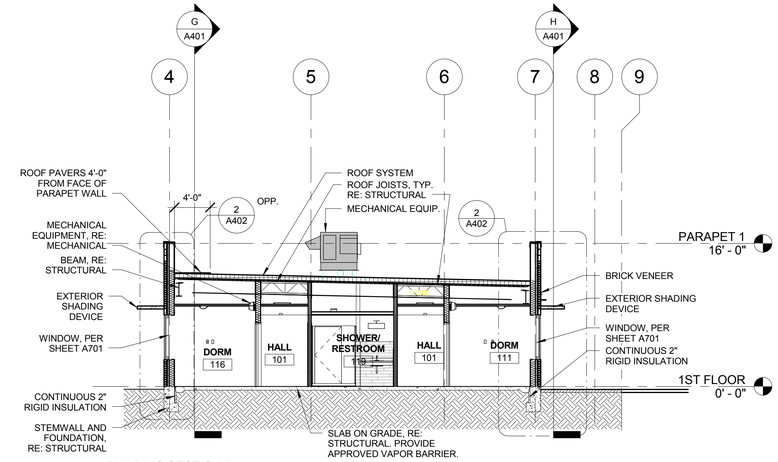

B BUILDING SECTION B
1/8" = 1'-0"

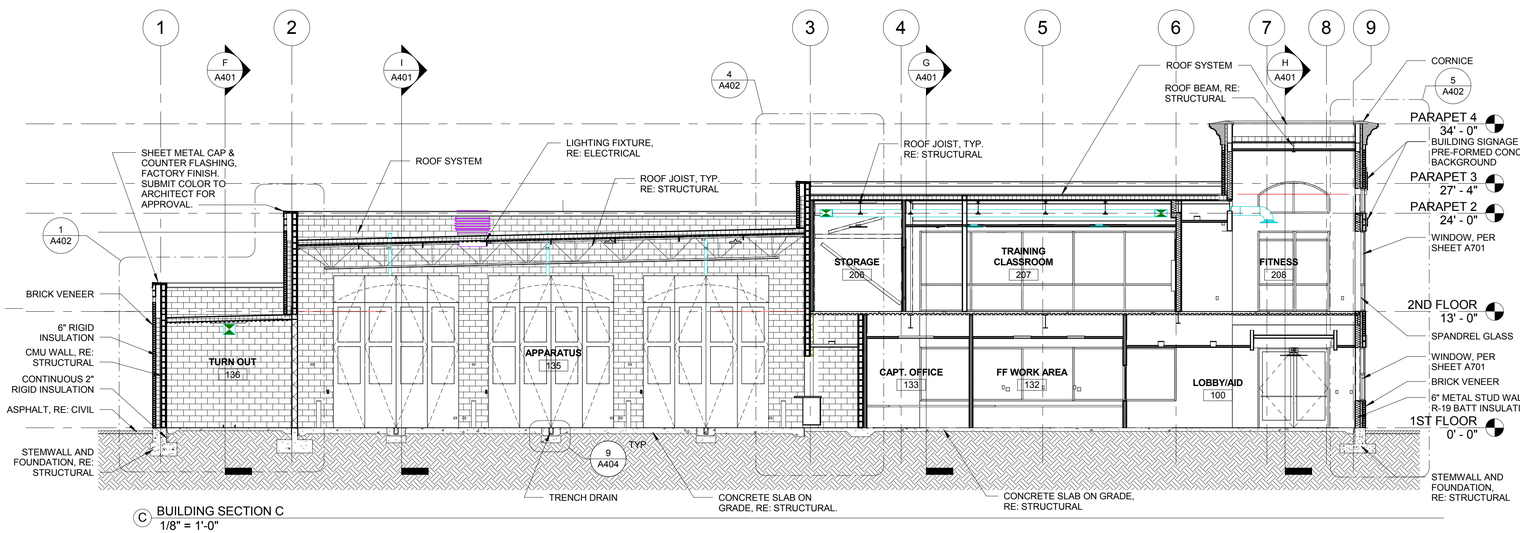

C BUILDING SECTION C
1/8" = 1'-0"

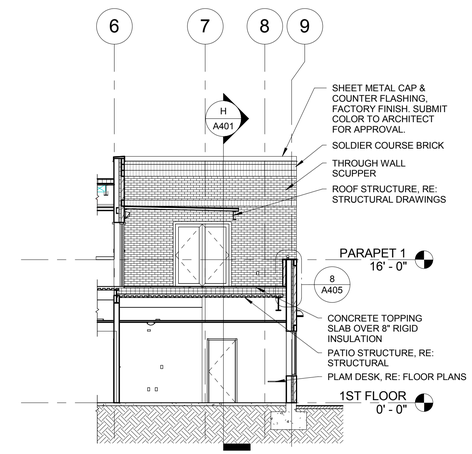

D BUILDING SECTION D
1/8" = 1'-0"

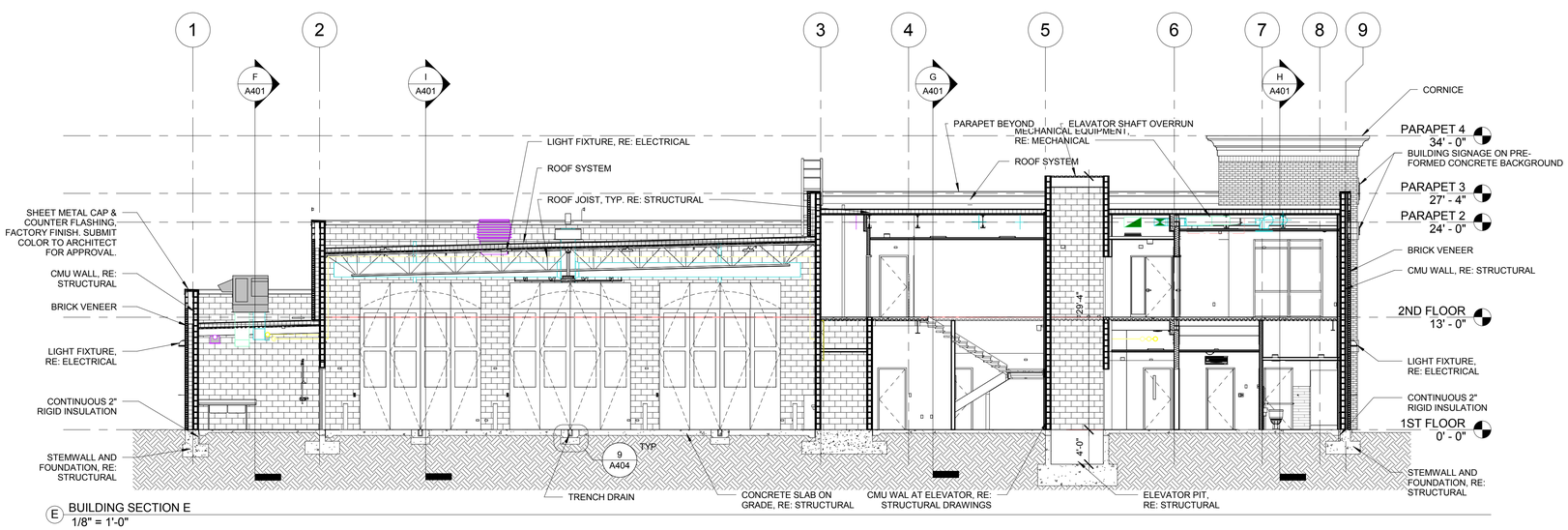

E BUILDING SECTION E
1/8" = 1'-0"

ARCHITECT:

COLE ARCHITECTS

COLE ARCHITECTS | 802 W. BANNOCK SUIT 208
Boise, ID 83702 | (208) 345-1800

TCA
architecture • planning

TCA | 6211 Roosevelt Way NE
Seattle, WA 98115 | (206) 522-3820

STAMP:

NOT FOR CONSTRUCTION

CONSULTANT:

PROJECT INFORMATION:

City of Boise Fire Station 4

8485 W Ustick Rd, Boise, ID 83704

REVISIONS:

MARK	DATE	DESCRIPTION

PROJECT PHASE	75% CD'S
PROJECT NUMBER	15-27
PROJECT MANAGER	J. Chatfield
PROJECT ARCHITECT	J. Chatfield
DESIGN	J. Chatfield
DRAWN BY	J. Chatfield, C. Clay, R. Stewart

SHEET NAME:

BUILDING SECTIONS

SHEET NUMBER:

A400

02.02.16

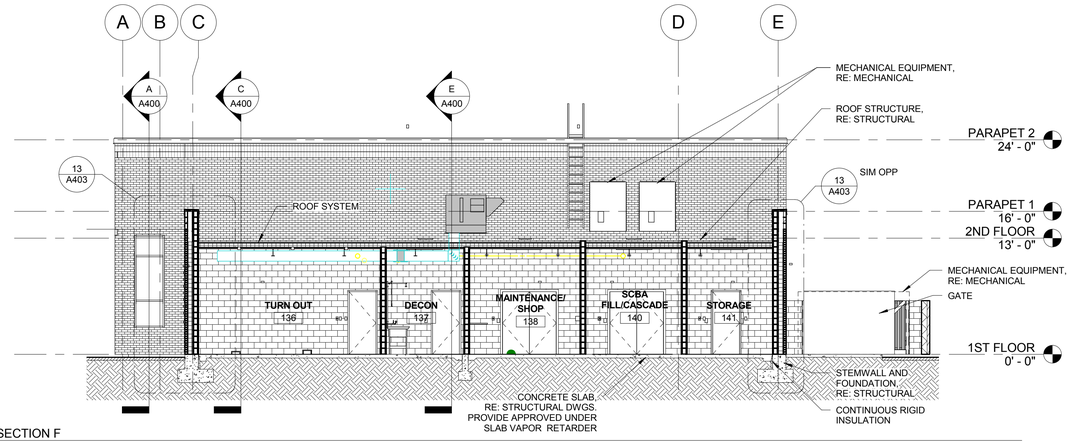

F BUILDING SECTION F
1/8" = 1'-0"

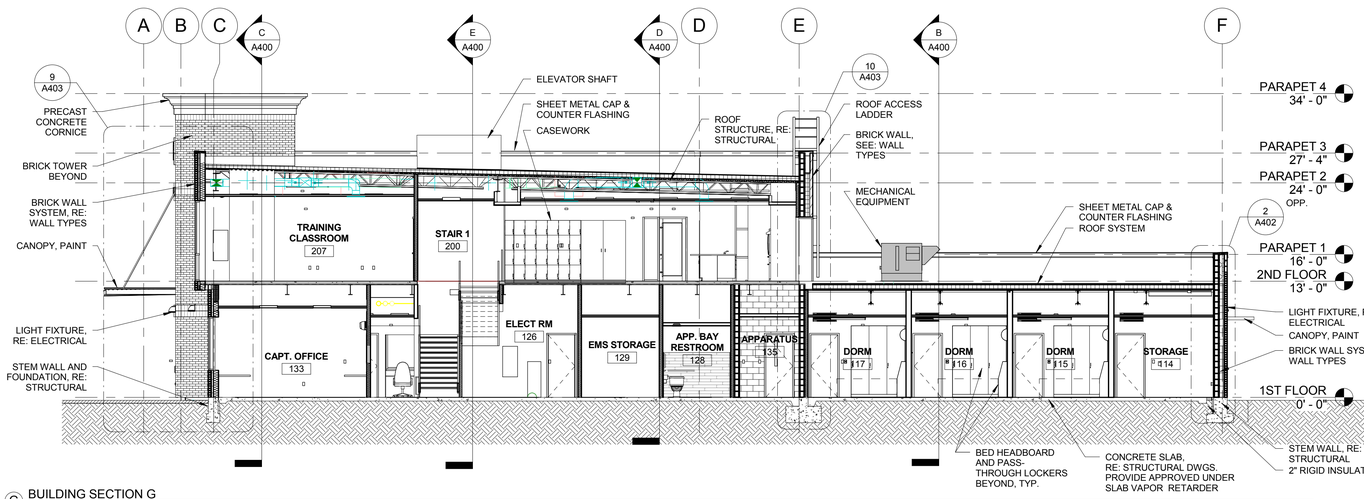

G BUILDING SECTION G
1/8" = 1'-0"

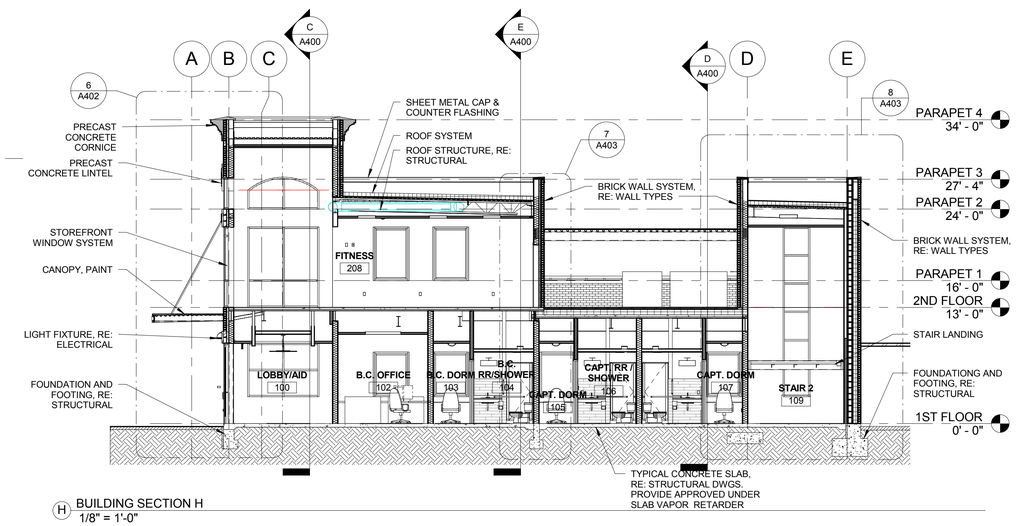

H BUILDING SECTION H
1/8" = 1'-0"

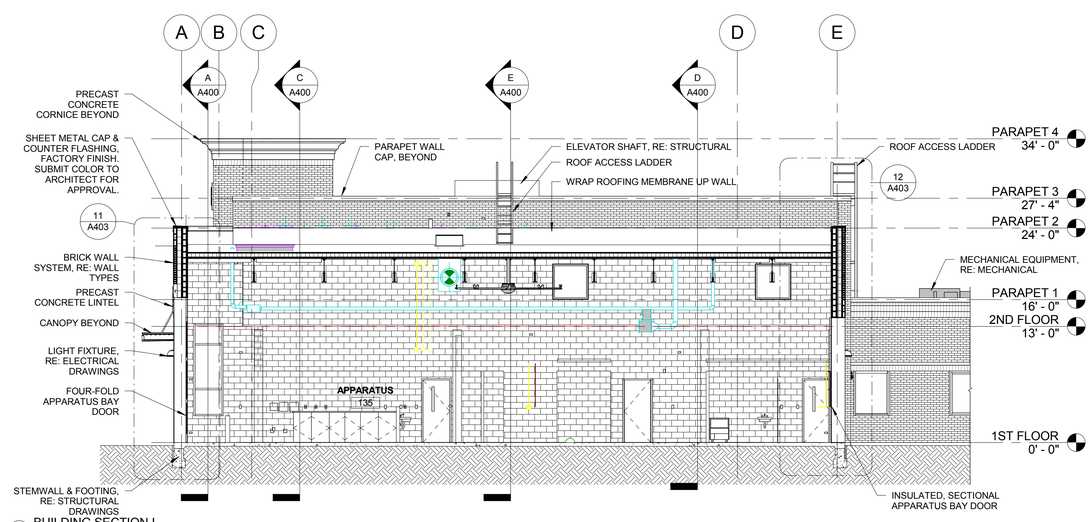

I BUILDING SECTION I
1/8" = 1'-0"

ARCHITECT:

COLE ARCHITECTS

COLE ARCHITECTS | 802 W. BANNOCK SUIT 208
Boise, ID 83702 | (208) 345-1800

TCA architecture • planning

TCA | 6211 Roosevelt Way NE
Seattle, WA 98115 | (206) 522-3820

STAMP:

NOT FOR CONSTRUCTION

CONSULTANT:

PROJECT INFORMATION:

City of Boise Fire Station 4

8485 W Ustick Rd, Boise, ID 83704

REVISIONS:

MARK	DATE	DESCRIPTION

PROJECT PHASE	75% CD'S
PROJECT NUMBER	15-27
PROJECT MANAGER	J. Chatfield
PROJECT ARCHITECT	J. Chatfield
DESIGN	J. Chatfield
DRAWN BY	J. Chatfield, C. Clay, R. Stewart

SHEET NAME:

BUILDING SECTIONS

SHEET NUMBER:

A401

02.02.16

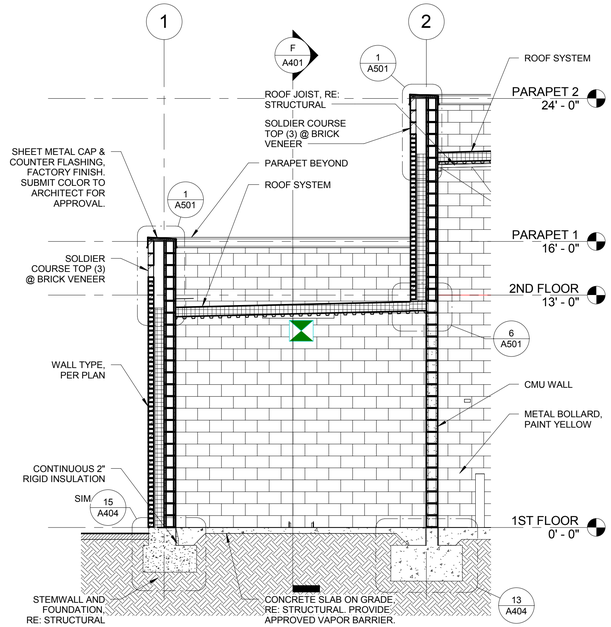

1 WALL SECTION 1
1/4" = 1'-0"

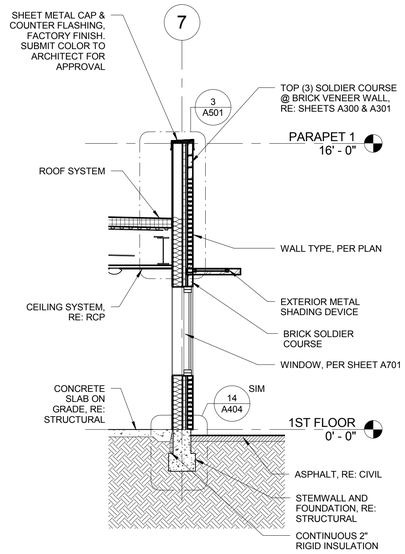

2 WALL SECTION 2
1/4" = 1'-0"

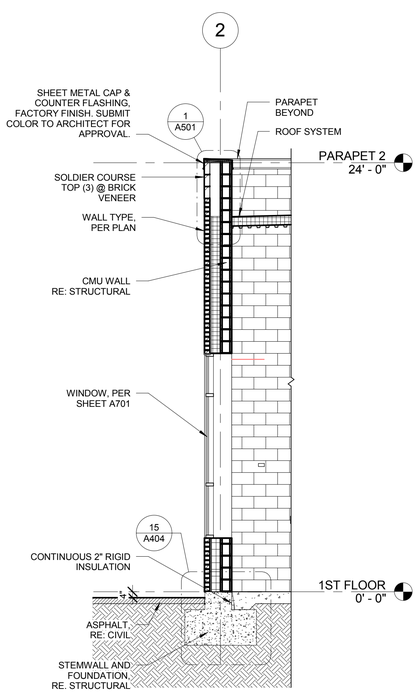

3 WALL SECTION 3
1/4" = 1'-0"

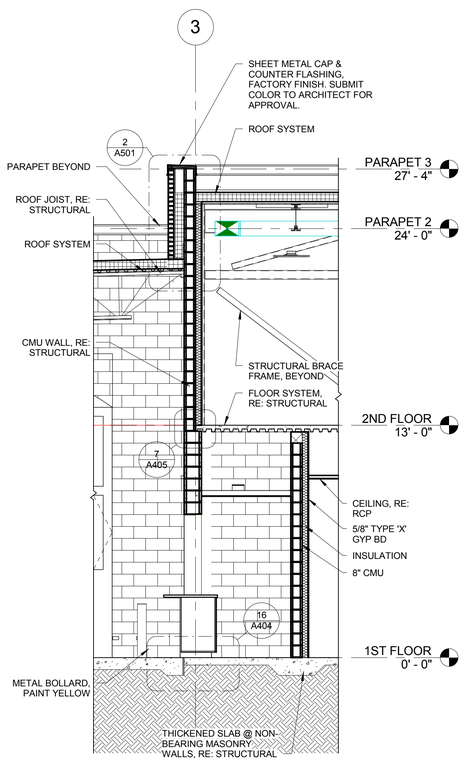

4 WALL SECTION 4
1/4" = 1'-0"

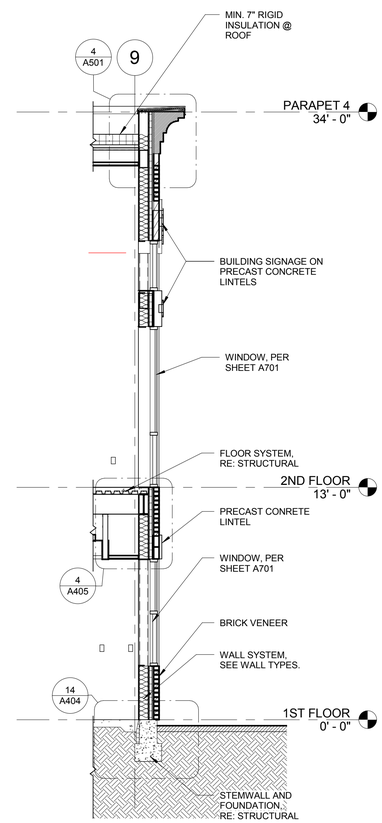

5 WALL SECTION 5
1/4" = 1'-0"

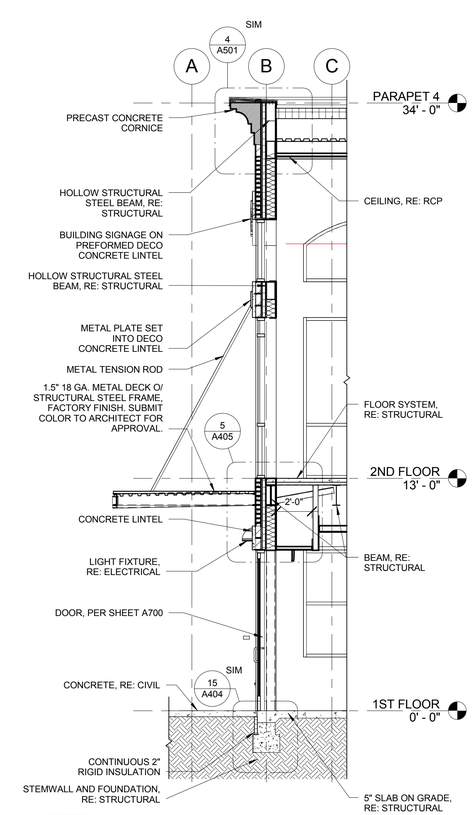

6 WALL SECTION 6
1/4" = 1'-0"

ARCHITECT:

COLE ARCHITECTS

COLE ARCHITECTS | 802 W. BANNOCK SUIT 208
Boise, ID 83702 | (208) 345-1800

TCA
architecture • planning

TCA | 6211 Roosevelt Way NE
Seattle, WA 98115 | (206) 522-3820

STAMP:

NOT FOR CONSTRUCTION

CONSULTANT:

PROJECT INFORMATION:

BOISE CITY OF TREES

BOISE FIRE EST. 1891 DEDICATION

City of Boise Fire Station 4

8485 W Ustick Rd, Boise, ID 83704

REVISIONS:

MARK	DATE	DESCRIPTION

PROJECT PHASE	75% CD'S
PROJECT NUMBER	15-27
PROJECT MANAGER	J. Chatfield
PROJECT ARCHITECT	J. Chatfield
DESIGN	J. Chatfield
DRAWN BY	J. Chatfield, C. Clay, R. Stewart

SHEET NAME:

WALL SECTIONS

SHEET NUMBER:

A402

02.02.16

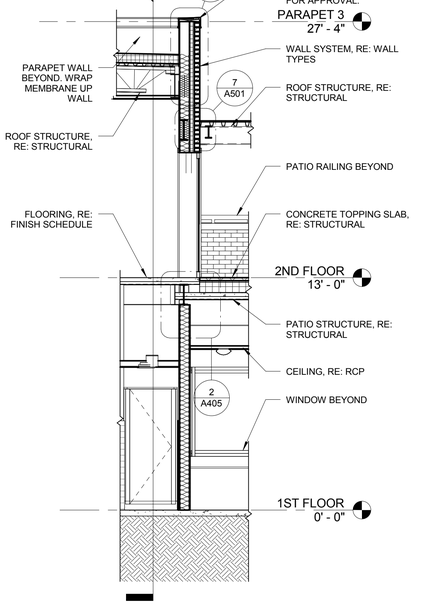

7 WALL SECTION 7
1/4" = 1'-0"

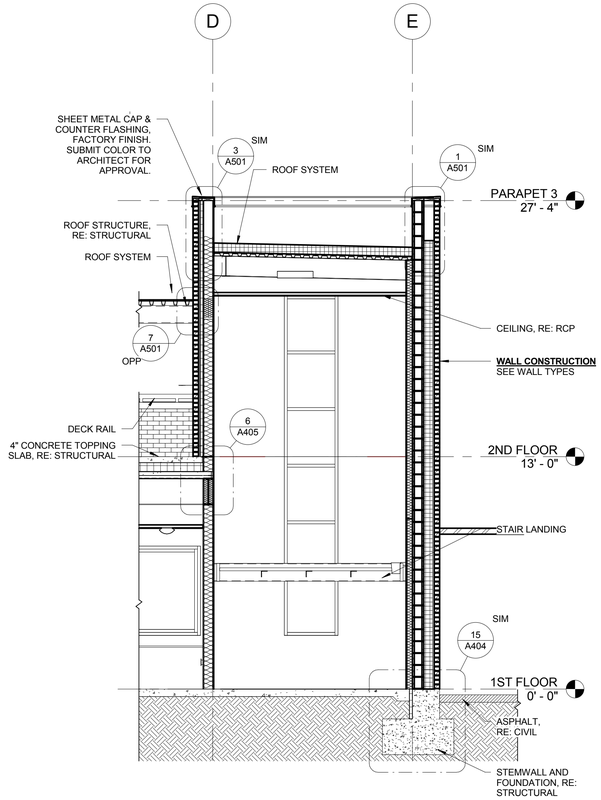

8 WALL SECTION 8
1/4" = 1'-0"

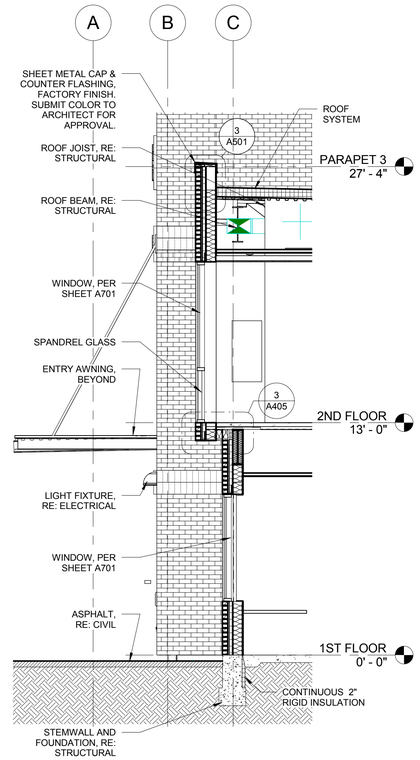

9 WALL SECTION 9
1/4" = 1'-0"

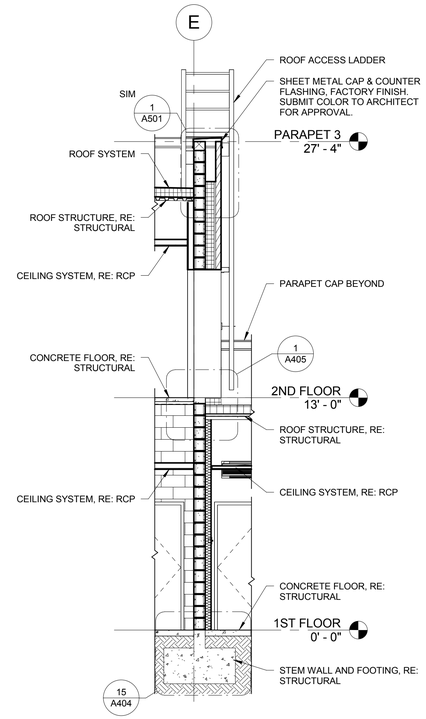

10 WALL SECTION 10
1/4" = 1'-0"

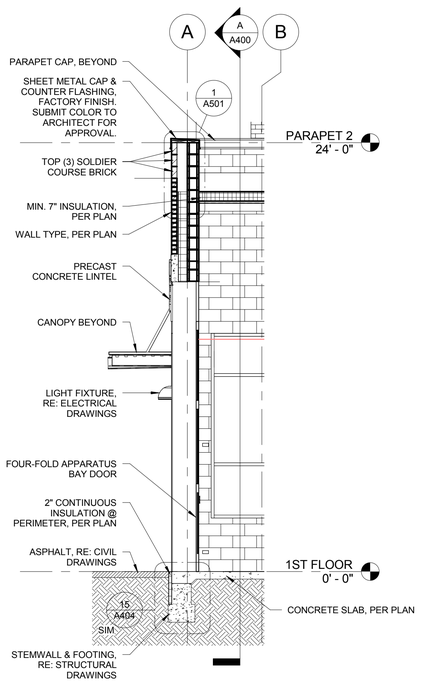

11 WALL SECTION 11
1/4" = 1'-0"

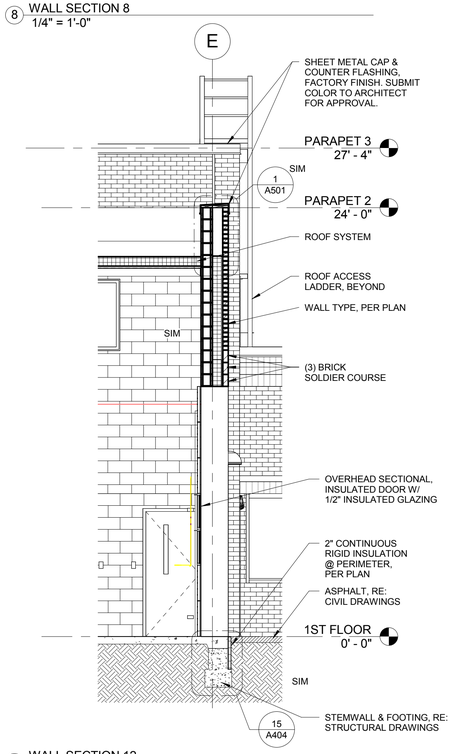

12 WALL SECTION 12
1/4" = 1'-0"

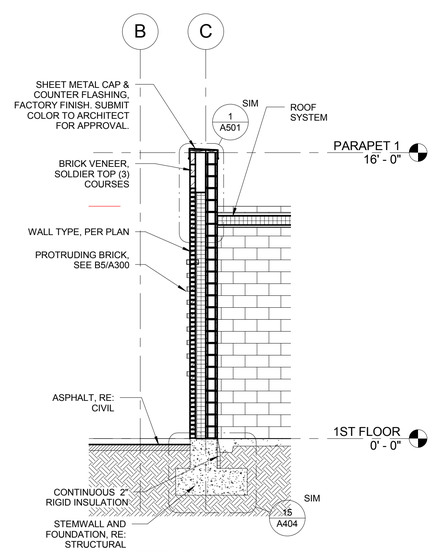

13 WALL SECTION 13
1/4" = 1'-0"

ARCHITECT:

COLE ARCHITECTS

COLE ARCHITECTS | 802 W. BANNOCK SUIT 208
Boise, ID 83702 | (208) 345-1800

TCA
architecture • planning

TCA | 6211 Roosevelt Way NE
Seattle, WA 98115 | (206) 522-3820

STAMP:

NOT FOR CONSTRUCTION

CONSULTANT:

PROJECT INFORMATION:

BOISE CITY OF TREES

BOISE FIRE Est. 1879 DEDICATION

City of Boise Fire Station 4

8485 W Ustick Rd, Boise, ID 83704

REVISIONS:

MARK	DATE	DESCRIPTION

PROJECT PHASE	75% CD'S
PROJECT NUMBER	15-27
PROJECT MANAGER	J. Chatfield
PROJECT ARCHITECT	J. Chatfield
DESIGN	J. Chatfield
DRAWN BY	J. Chatfield, C. Clay, R. Stewart

SHEET NAME:

WALL SECTIONS

SHEET NUMBER:

A403

02.02.16

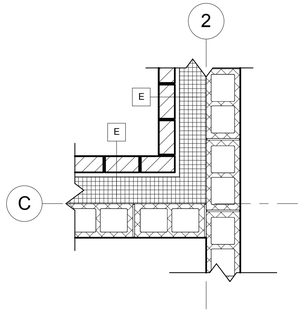

1 WALL PLAN 1
3/4" = 1'-0"

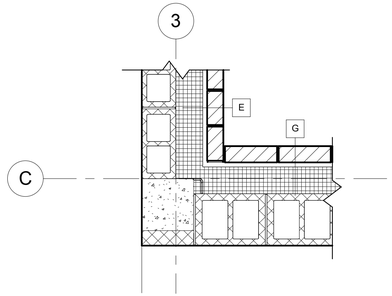

2 WALL PLAN 2
3/4" = 1'-0"

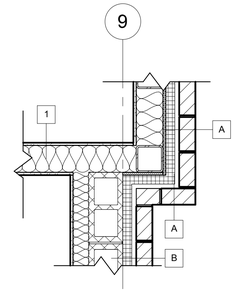

3 WALL PLAN 3
3/4" = 1'-0"

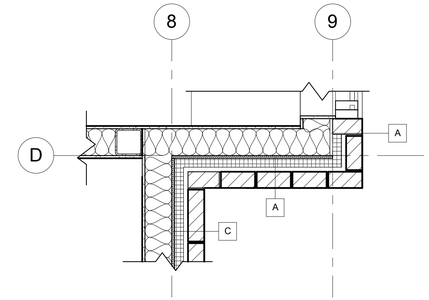

4 WALL PLAN 4
3/4" = 1'-0"

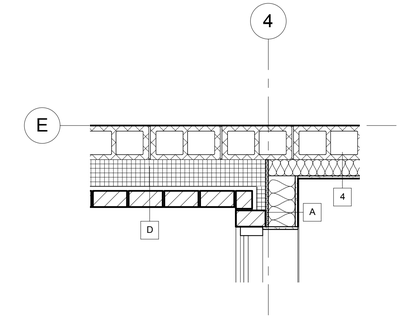

5 WALL PLAN 5
3/4" = 1'-0"

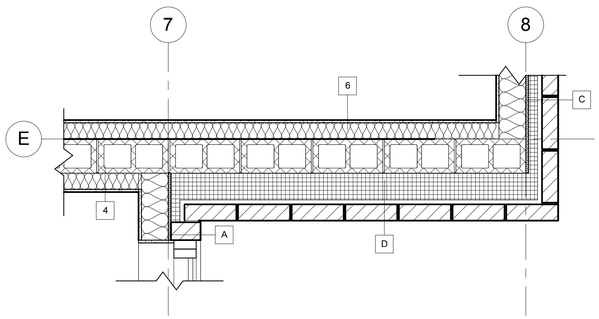

6 WALL PLAN 6
3/4" = 1'-0"

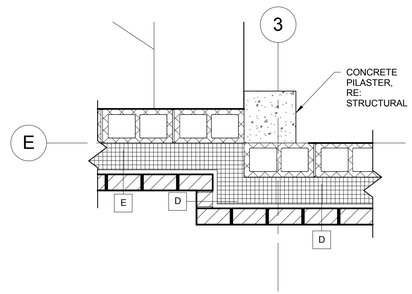

7 WALL PLAN 7
3/4" = 1'-0"

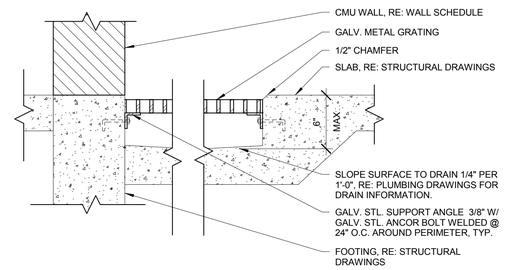

8 FLOOR GRATE DETAIL
1 1/2" = 1'-0"

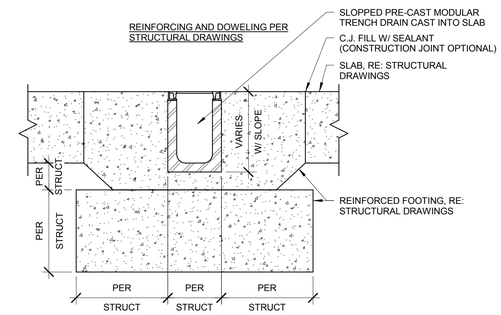

9 FLOOR TRENCH DRAIN DETAIL
1 1/2" = 1'-0"

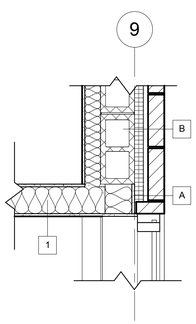

10 WALL PLAN 8
3/4" = 1'-0"

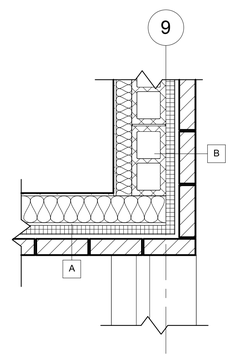

11 WALL PLAN 9
3/4" = 1'-0"

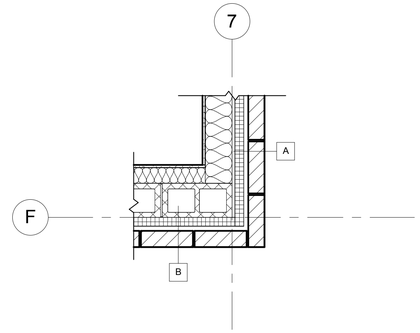

12 WALL PLAN 10
3/4" = 1'-0"

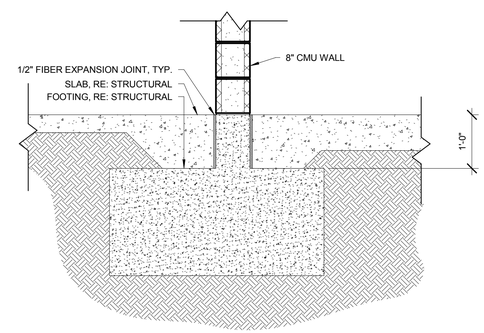

13 FOOTING @ FLOOR TRANSITION
3/4" = 1'-0"

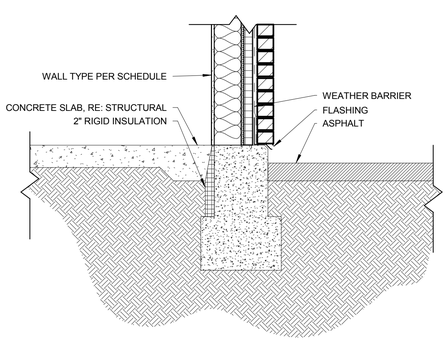

14 STUD WALL FOOTING DETAIL
3/4" = 1'-0"

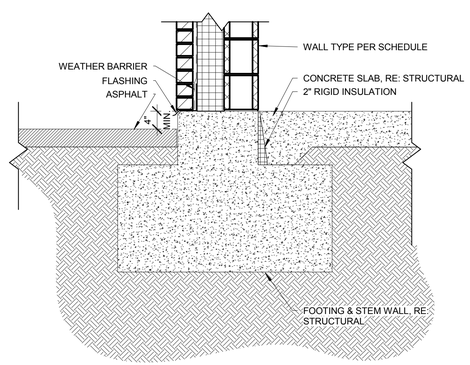

15 FOOTING DETAIL
3/4" = 1'-0"

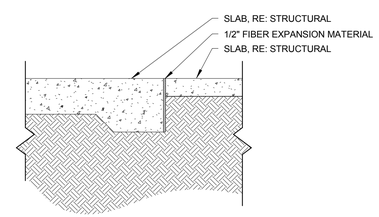

16 THICKENED SLAB TRANSITION
3/4" = 1'-0"

ARCHITECT:

COLE ARCHITECTS

COLE ARCHITECTS | 802 W. BANNOCK SUIT 208
Boise, ID 83702 | (208) 345-1800

TCA architecture • planning

TCA | 6211 Roosevelt Way NE
Seattle, WA 98115 | (206) 522-3820

STAMP:

NOT FOR CONSTRUCTION

CONSULTANT:

PROJECT INFORMATION:

City of Boise Fire Station 4

8485 W Ustick Rd, Boise, ID 83704

REVISIONS:

MARK	DATE	DESCRIPTION

PROJECT PHASE	75% CD'S
PROJECT NUMBER	15-27
PROJECT MANAGER	J. Chatfield
PROJECT ARCHITECT	J. Chatfield
DESIGN	J. Chatfield
DRAWN BY	J. Chatfield, C. Clay, R. Stewart

SHEET NAME:

DETAILS

SHEET NUMBER:

A404

02.02.16

IN PROGRESS

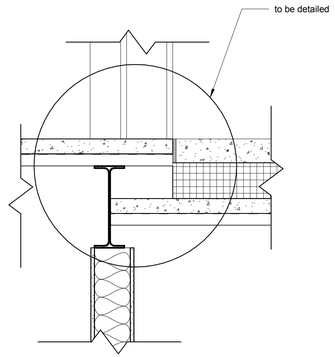

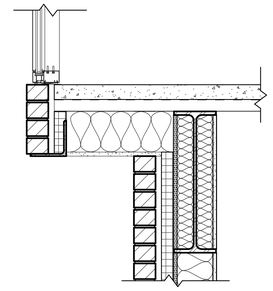

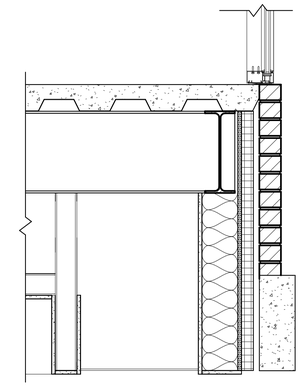

1 ROOF PATIO @ KITCHEN
1 1/2" = 1'-0"

2 2ND FLOOR PATIO @ TRAINING
1" = 1'-0"

3 2ND FLOOR CANTILEVER
1" = 1'-0"

4 SOFFIT @ STUD WALL DETAIL
1" = 1'-0"

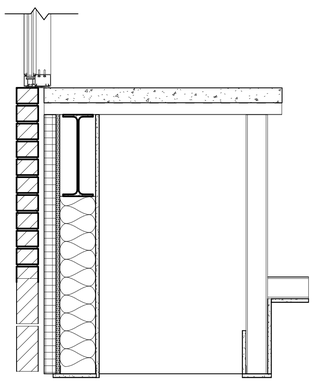

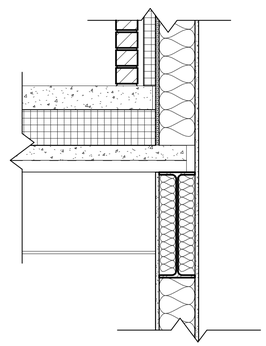

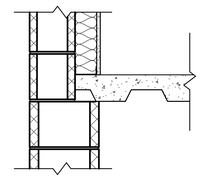

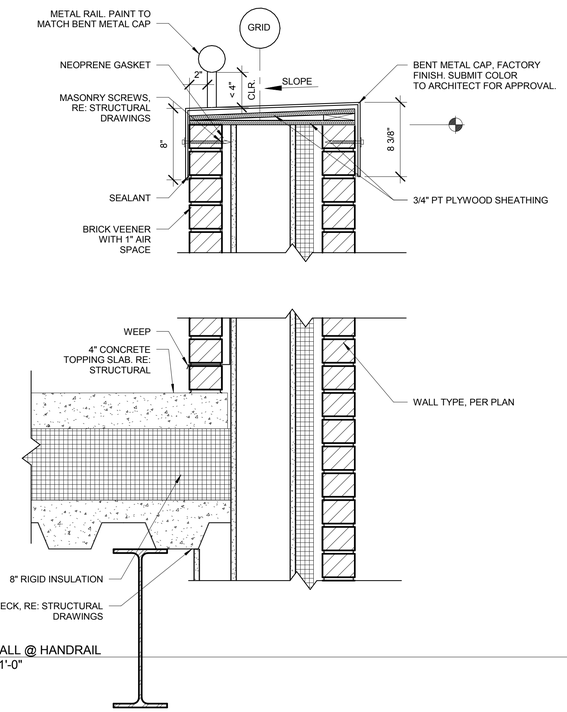

5 TOWER CANOPY @ WALL
1" = 1'-0"

6 2ND FLOOR DECK @ GRID D
1" = 1'-0"

7 CONCRETE FLOOR @ CMU WALL
1" = 1'-0"

8 DECK WALL @ HANDRAIL
1 1/2" = 1'-0"

ARCHITECT:

COLE ARCHITECTS

COLE ARCHITECTS | 802 W. BANNOCK SUIT 208
Boise, ID 83702 | (208) 345-1800

TCA architecture • planning

TCA | 6211 Roosevelt Way NE
Seattle, WA 98115 | (206) 522-3820

STAMP:

NOT FOR CONSTRUCTION

CONSULTANT:

PROJECT INFORMATION:

BOISE CITY OF TREES

BOISE FIRE EST. 1870 DEDICATION

City of Boise Fire Station 4

8485 W Ustick Rd, Boise, ID 83704

REVISIONS:

MARK	DATE	DESCRIPTION

PROJECT PHASE	75% CD'S
PROJECT NUMBER	15-27
PROJECT MANAGER	J. Chatfield
PROJECT ARCHITECT	J. Chatfield
DESIGN	J. Chatfield
DRAWN BY	J. Chatfield, C. Clay, R. Stewart

SHEET NAME:

DETAILS

SHEET NUMBER:

A405

02.02.16

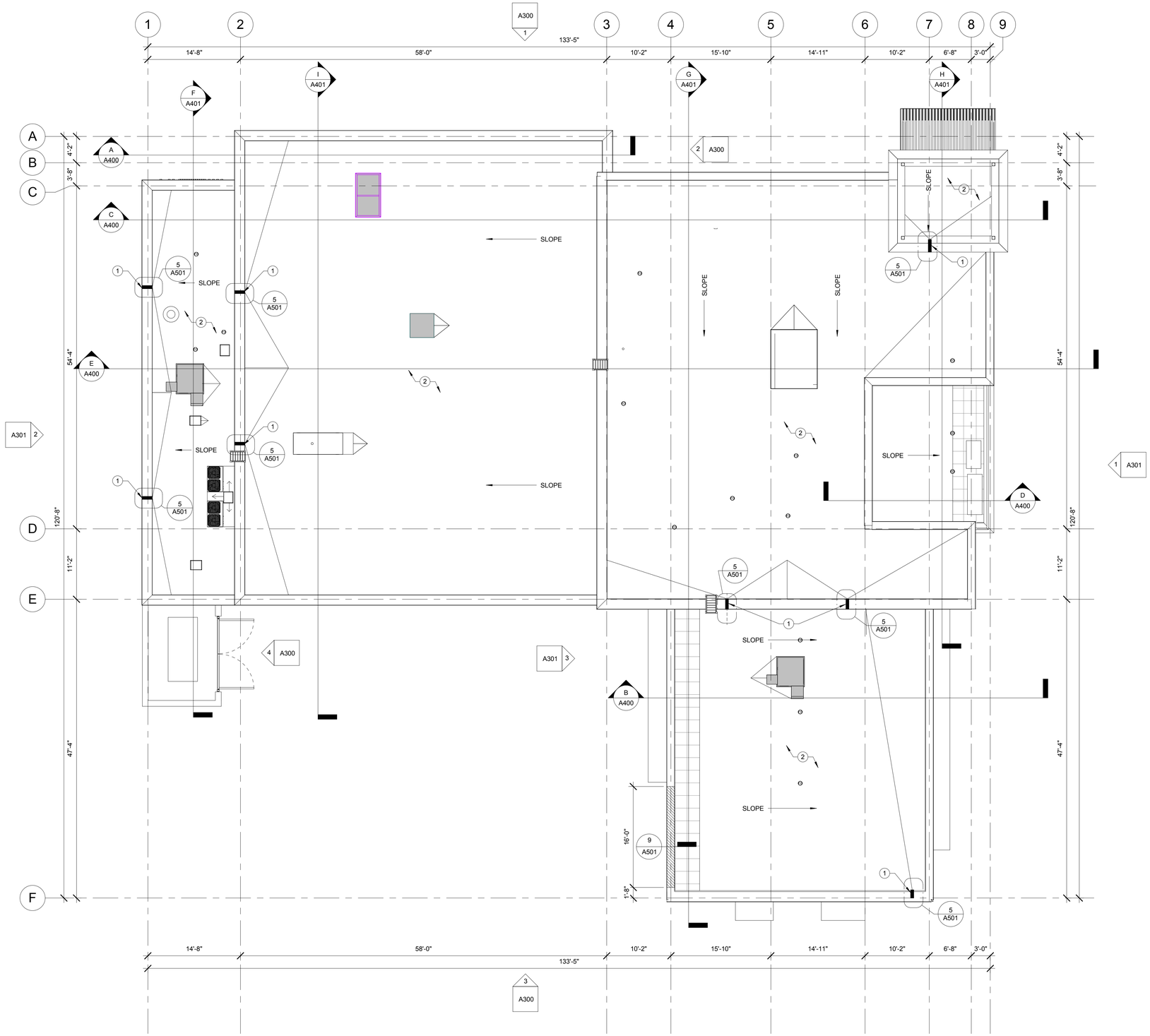

ROOF PLAN
1/8" = 1'-0"

GENERAL NOTES ROOF PLAN:

A. COORDINATE INSTALLATION OF ROOFING WITH OTHER TRADES. REPORT ANY CONFLICTS WITH ITEMS INSTALLED BY OTHER TRADES TO ARCHITECT.

B. ALL ROOF CURBS FOR NEW ROOFTOP EXHAUST FANS , HVAC UNITS AND CONDENSING UNITS SHALL HAVE CURB HEIGHTS THAT WILL ALLOW FOR A MINIMUM OF 8" BASE FLASHING HEIGHTS FOR THE ROOF SYSTEM.

C. ALL PLUMBING VENTS SHALL EXTEND ABOVE THE FINISHED SURFACE OF THE ROOF SYSTEM AS REQUIRED TO PROVIDE FOR A MINIMUM OF 8" BASE FLASHING. PROVIDE FLASHING AROUND VENTS AND ROOF PENETRATIONS PER ROOFING MANUFACTURER RECOMMENDATIONS.

D. PROVIDE 36" WIDE WALK PADS AROUND PERIMITER OF ALL MECHANICAL EQUIPMENT. PROVIDE 36" WIDE WALK PADS AROUND ALL ROOF HATCHES & 72"X72" PADS AT LADDERS.

E. UNLESS NOTED OTHERWISE - PROVIDE FIRESTONE UNI-CLAD KYNAR 500/HYLAR 5000 PRE-FINISHED GALVALUME STEEL (24 GA) ARCHITECTURE SHEET AND COIL FOR ALL COPINGS, FLASHING & TRIM PIECES. SUBMIT STANDARD COLOR SELECTION TO ARCHITECT FOR APPROVAL. FIELD PAINT METAL ONLY AS REQUIRED OR NOTED. ALL CLEATS TO BE CONTINUOUS.

F. ALL GUTTERS TO BE PREFINISHED SMACNA APPROVED 'K' STYLE CONTINUOUS ALUMINUM GUTTERS SIZED FOR QUANTITY OF WATER FLOW. PROVIDE STAINLESS STEEL SCREENS FOR GUTTERS. UNO PROVIDE HEAT CABLE IN GUTTER. UNO SUBMIT STANDARD COLOR SELECTION TO ARCHITECT FOR APPROVAL.

G. ALL DOWNSPOUTS TO BE PRE-FINISHED SMACNA APPROVED RECTANGULAR ALUMINUM DOWNSPOUT SIZED FOR QUANTITY OF WATER FLOW. PROVIDE ALUMINUM ATTACHMENT CLIPS AT MAX 4' INTERVALS. UNO PROVIDE HEAT CABLE IN DOWNSPOUT AND EXTEND INTO GROUND. UNO SUBMIT STANDARD COLOR SELECTION TO ARCHITECT FOR APPROVAL. SEE EXTERIOR ELEVATIONS OR ROOF PLAN FOR LOCATIONS.

H. PROVIDE PAINTED 4' TALL CAST ALUM. DOWNSPOUT BOOTS @ ALL DOWN SPOUTS, TIE INTO SUB-GRADE DRAINAGE, RE: CIVIL.

I. TAPERED INSULATION TO BE 1/4" PER FOOT MIN SLOPE TO DRAIN. ROOF PLAN SHOWS TAPERED INSULATION FOR GRAPHIC REPRESENTATION ONLY. CONTRACTOR TO VERIFY INSULATION REQUIRED TO SLOPE PRIOR TO MEMBRANE INSULATION.

J. PROVIDE TAPERED INSULATION CRICKETS 1/4" PER FOOT MIN. SLOPE @ HIGH SIDE OF ALL MECHANICAL UNITS AND ROOF HATCHES, TO SHED WATER AROUND AND MAINTAIN POSITIVE ROOF DRAINAGE.

K. VERIFY ELEVATION OF ROOF DRAIN RELATIVE TO OVERFLOW SCUPPER PRIOR TO INSTALLATION OF SCUPPER

L. PROVIDE SELF-ADHERING VAPOR RETARDER BETWEEN DECK AND INSULATION, SEE DETAILS. UNO PROVIDE CARLISLE AIR & VAPOR BARRIER TR725. PROVIDE AIR TIGHT SEAL AROUND ALL DECK PENETRATIONS AND DECK PERIMITER PRIOR TO INSTALLING VAPOR BARRIER.

M. ALL WOOD NAILER AND BLOCKING TO BE TREATED. SECURE NAILERS PER FM GLOBAL 1-49 PERIMETER FLASHING REQUIREMENTS.

N. PROVIDE VAPOR RETARDER BETWEEN DECK AND INSULATION PER ROOFING MANUFACTURER'S REQUIREMENTS AND RECOMMENDATIONS, SEE DETAILS. PROVIDE AIR TIGHT SEAL AROUND ALL DECK PENETRATIONS AND DECK PERIMITER PRIOR TO INSTALLING VAPOR RETARDER. (ROOF SYSTEM, BASIS OF DESIGN: THE GARLAND COMPANY, STRESSPLY E FR MINERAL)

KEY NOTES: (#)

1. LOCATION OF THROUGH WALL SCUPPER
2. ROOF SYSTEM. BASIS OF DESIGN: THE GARLAND COMPANY, STRESSPLY E FR MINERAL.

ARCHITECT:

COLE ARCHITECTS

COLE ARCHITECTS | 802 W. BANNOCK SUIT 208
Boise, ID 83702 | (208) 345-1800

TCA architecture • planning

TCA | 6211 Roosevelt Way NE
Seattle, WA 98115 | (206) 522-3820

STAMP:

NOT FOR CONSTRUCTION

CONSULTANT:

PROJECT INFORMATION:

BOISE CITY OF TREES

BOISE FIRE DEDICATION

City of Boise Fire Station 4

8485 W Ustick Rd, Boise, ID 83704

REVISIONS:

MARK	DATE	DESCRIPTION

PROJECT PHASE	75% CD'S
PROJECT NUMBER	15-27
PROJECT MANAGER	J. Chatfield
PROJECT ARCHITECT	J. Chatfield
DESIGN	J. Chatfield
DRAWN BY	J. Chatfield, C. Clay, R. Stewart

SHEET NAME:

ROOF PLAN

SHEET NUMBER:

A500

02.02.16

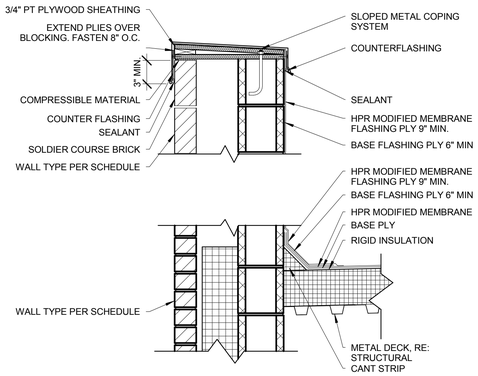

1 TYPICAL WALL CAP DETAIL
1" = 1'-0"

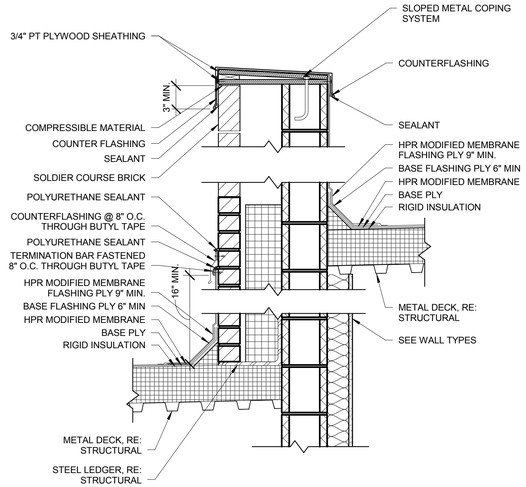

2 APPARATUS BAY ROOF @ BRICK WALL
1" = 1'-0"

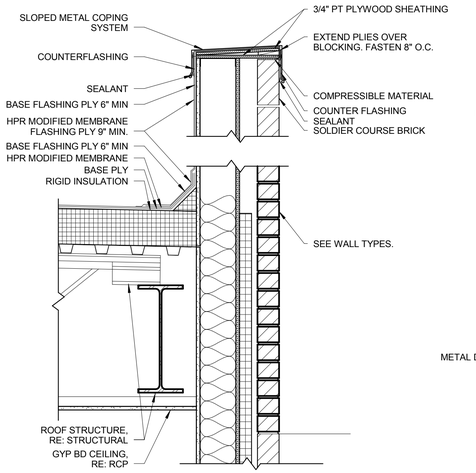

3 STUD WALL PARAPET CAP
1" = 1'-0"

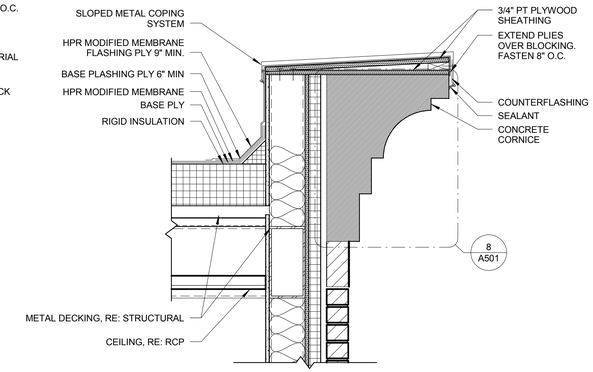

4 TOWER CORNICE DETAIL
1" = 1'-0"

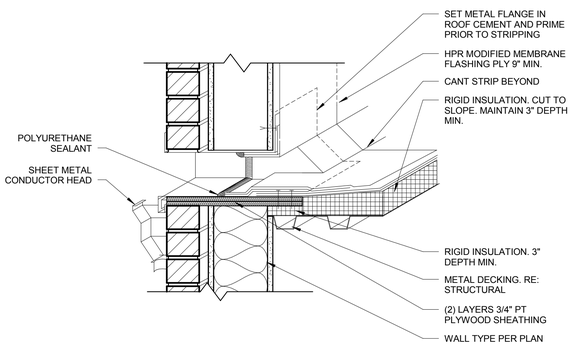

5 THROUGH-WALL SCUPPER - STUD WALL
1 1/2" = 1'-0"

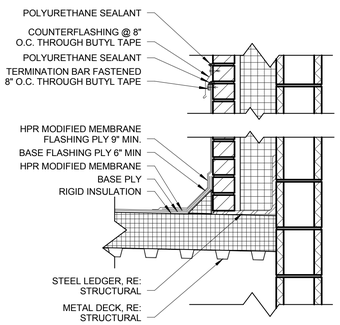

6 ROOF @ WALL
1" = 1'-0"

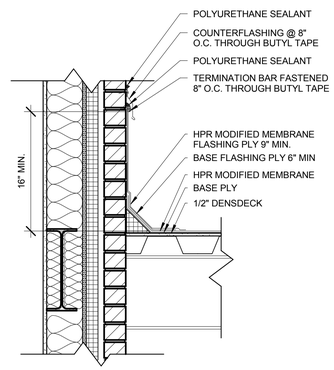

7 PATIO ROOF @ WALL CONNECTION
1" = 1'-0"

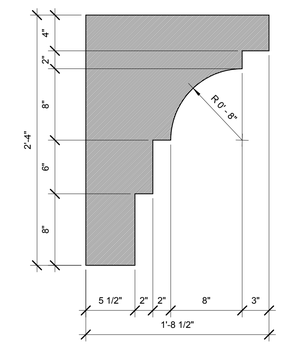

8 CORNICE DETAIL
1 1/2" = 1'-0"

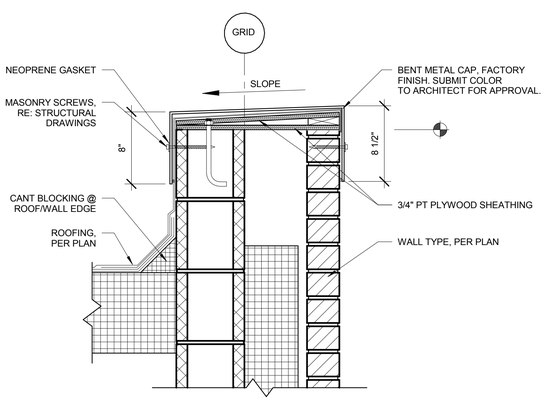

9 PARAPET @ BENT METAL
1 1/2" = 1'-0"

ARCHITECT:

COLE ARCHITECTS

COLE ARCHITECTS | 802 W. BANNOCK SUIT 208
Boise, ID 83702 | (208) 345-1800

TCA architecture • planning

TCA | 6211 Roosevelt Way NE
Seattle, WA 98115 | (206) 522-3820

STAMP:

NOT FOR CONSTRUCTION

CONSULTANT:

PROJECT INFORMATION:

City of Boise Fire Station 4

8485 W Ustick Rd, Boise, ID 83704

REVISIONS:

MARK	DATE	DESCRIPTION

PROJECT PHASE	75% CD'S
PROJECT NUMBER	15-27
PROJECT MANAGER	J. Chatfield
PROJECT ARCHITECT	J. Chatfield
DESIGN	J. Chatfield
DRAWN BY	J. Chatfield, C. Clay, R. Stewart

SHEET NAME:

DETAILS

SHEET NUMBER:

A501

02.02.16

INTERIOR WALL TYPES LEGEND

*SEE BUILDING SECTIONS, WALL SECTIONS, DETAILS AND STRUCTURAL DRAWINGS ADDITIONAL DESIGN INFORMATION.

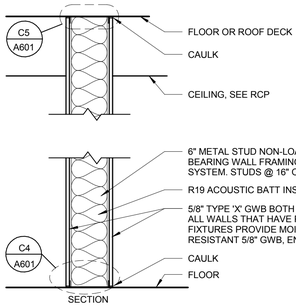

WALL TYPE
NO SCALE
1

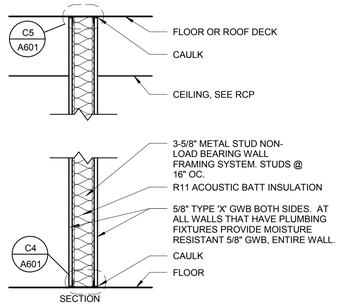

WALL TYPE
NO SCALE
2

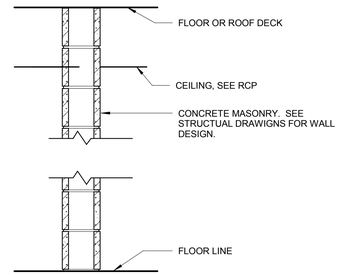

RATING INFORMATION
FIRE RATING - 2 HOUR

WALL TYPE
NO SCALE
3

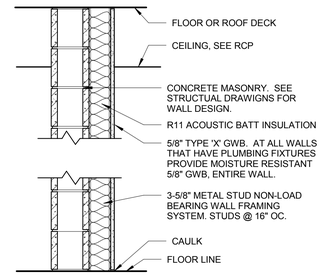

RATING INFORMATION
FIRE RATING - 2 HOUR

WALL TYPE
NO SCALE
4

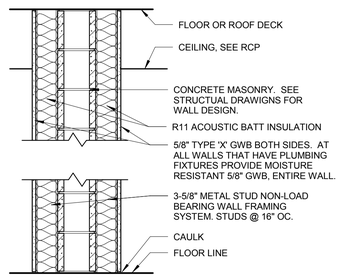

RATING INFORMATION
FIRE RATING - 2 HOUR

WALL TYPE
NO SCALE
5

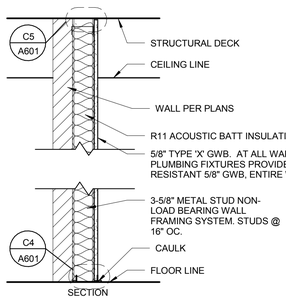

WALL TYPE
NO SCALE
6

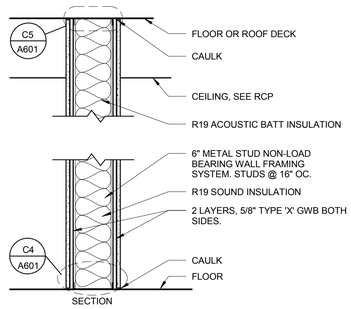

WALL TYPE
NO SCALE
7

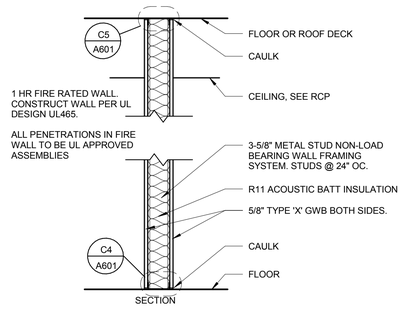

WALL TYPE
NO SCALE
8

FIRE RATED - 1HR

WALL TYPES - INTERIOR

1" = 1'-0"

EXTERIOR WALL TYPES LEGEND

*SEE BUILDING SECTIONS, WALL SECTIONS, DETAILS AND STRUCTURAL DRAWINGS ADDITIONAL DESIGN INFORMATION.

SECTION VIEW (INTERIOR (LEFT) - EXTERIOR (RIGHT))

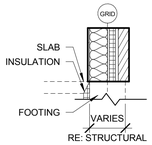

A

3-5/8" x 2-1/4" x 7-5/8" MODULAR BRICK
1" AIR SPACE
R8 2" RIGID INSULATION
WEATHER BARRIER
5/8" EXTERIOR GYPSUM SHEATHING
6" METAL STUD W/ R15 BATT INSULATION
VAPOR RETARDER
5/8" TYPE 'X' GYPSUM WALLBOARD

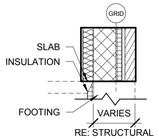

B

3-5/8" x 2-1/4" x 7-5/8" MODULAR BRICK
1" AIR SPACE
R8 2" RIGID INSULATION
WEATHER BARRIER
7-5/8" CONCRETE MASONRY UNIT
3-5/8" STEEL STUD W/ R15 BATT INSULATION
VAPOR RETARDER
5/8" TYPE "X" GYPSUM WALLBOARD

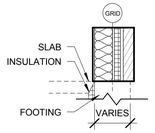

C

3-5/8" x 3-5/8" x 11-5/8" UTILITY BRICK
1" AIR SPACE
R8 2" RIGID INSULATION
WEATHER BARRIER
5/8" EXTERIOR GYPSUM SHEATHING
6" METAL STUD W/ R24 BATT INSULATION
VAPOR RETARDER
5/8" TYPE "X" GYPSUM WALLBOARD

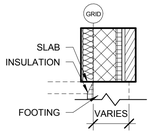

D

3-5/8" x 3-5/8" x 11-5/8" UTILITY BRICK
1" AIR SPACE
R8 2" RIGID INSULATION
WEATHER BARRIER
7-5/8" CONCRETE MASONRY UNIT
3-5/8" STEEL STUD W/ R15 BATT INSULATION
VAPOR RETARDER
5/8" TYPE "X" GYPSUM WALLBOARD

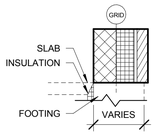

E

3-5/8" x 3-5/8" x 11-5/8" UTILITY BRICK
1" AIR SPACE
R24 RIGID INSULATION
AIR BARRIER
7 5/8" CONCRETE MASONRY UNIT

F

3-5/8" x 2-1/4" x 7-5/8" MODULAR BRICK
7 5/8" CONCRETE MASONRY UNIT

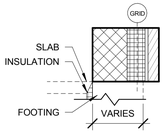

G

3-5/8" x 3-5/8" x 11-5/8" UTILITY BRICK
1" AIR SPACE
R24 RIGID INSULATION
AIR BARRIER
11-5/8" CONCRETE MASONRY UNIT

WALL TYPES - EXTERIOR

1/2" = 1'-0"

GENERAL NOTES WALL TYPES:

A. REFERENCE WALL TYPES FROM FLOOR OR DIMENSION PLANS.

B. CONSTRUCT WALLS PER TYPICAL DETAILS ON SHEET A601.
1. STEEL STUD CONNECTION SCHEDULE.
2. JAMB AT VERTICAL OPENINGS.
3. WALL INTERSECTIONS.
4. SILL AT FRAMED OPENINGS.
5. BOX HEADER.
6. COLD ROLLED CHANNEL BRIDGING.

ARCHITECT:

COLE ARCHITECTS

COLE ARCHITECTS | 802 W. BANNOCK SUIT 208
Boise, ID 83702 | (208) 345-1800

TCA | 6211 Roosevelt Way NE
Seattle, WA 98115 | (206) 522-3820

STAMP:

NOT FOR CONSTRUCTION

CONSULTANT:

PROJECT INFORMATION:

City of Boise Fire Station 4

8485 W Ustick Rd, Boise, ID 83704

REVISIONS:

MARK	DATE	DESCRIPTION

PROJECT PHASE	75% CD'S
PROJECT NUMBER	15-27
PROJECT MANAGER	J. Chatfield
PROJECT ARCHITECT	J. Chatfield
DESIGN	J. Chatfield
DRAWN BY	J. Chatfield, C. Clay, R. Stewart

SHEET NAME:

WALL TYPES

SHEET NUMBER:

A600

02.02.16

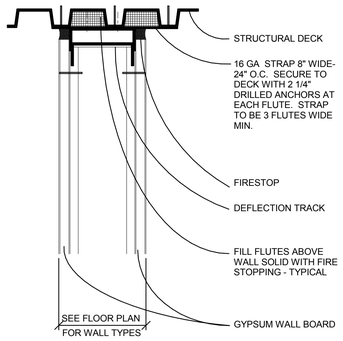

NOTE: FIRESTOP SYSTEM IS REQUIRED ONLY AT RATED WALLS REFER TO LIFE SAFETY PLANS FOR LOCATIONS. USE APPROPRIATE UL LISTED ASSEMBLY BASED ON WALL AND STRUCTURAL DECK CONSTRUCTION.

5B FIRESTOPPING WALL PARALLEL TO FLUTES
NO SCALE

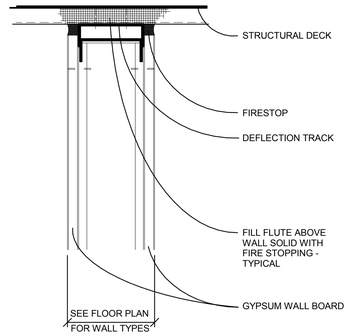

NOTE: FIRESTOP SYSTEM IS REQUIRED ONLY AT RATED WALLS REFER TO LIFE SAFETY PLANS FOR LOCATIONS. USE APPROPRIATE UL LISTED ASSEMBLY BASED ON WALL AND STRUCTURAL DECK CONSTRUCTION.

4B FIRESTOPPING WALL PERPENDICULAR TO FLUTES
NO SCALE

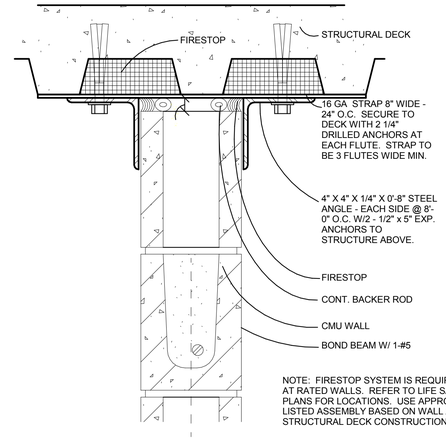

NOTE: FIRESTOP SYSTEM IS REQUIRED ONLY AT RATED WALLS. REFER TO LIFE SAFETY PLANS FOR LOCATIONS. USE APPROPRIATE UL LISTED ASSEMBLY BASED ON WALL AND STRUCTURAL DECK CONSTRUCTION.

5B FIRESTOPPING MASONRY WALL ATTACHMENT TO METAL DECK
NO SCALE

GENERAL NOTES WALL TYPES:

A. REFERENCE WALL TYPES FROM FLOOR OR DIMENSION PLANS.

B. CONSTRUCT WALLS PER TYPICAL DETAILS ON SHEET A601.
1. STEEL STUD CONNECTION SCHEDULE.
2. JAMB AT VERTICAL OPENINGS.
3. WALL INTERSECTIONS.
4. SILL AT FRAMED OPENINGS.
5. BOX HEADER.
6. COLD ROLLED CHANNEL BRIDGING.

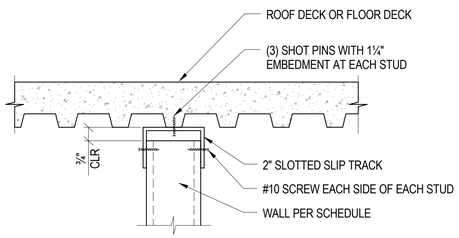

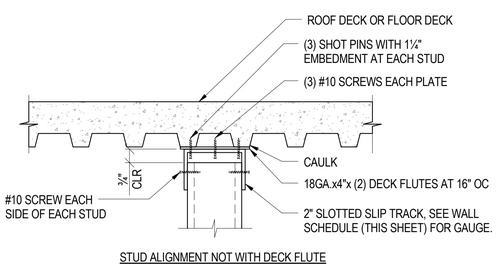

C5 WALL TYPES - METAL STUD - SLIP TRACK CONNECTION
3/4" = 1'-0"

FASTENING CHART	
WALL CONDITION	FASTENING REQUIREMENT
FULL HEIGHT STUD WALLS	(1) SHOT-PIN @ 24" O.C., PROVIDE (1) SHOT-PIN WITHIN 9" OF WALL END OR JAMB

NOTES:
1. All "shot-pins" shall be low velocity type fasteners as manufactured by Hilti corporation. Attach light-gage material to concrete with Hilti X-U 27 P8-S15 (ERS-2269)

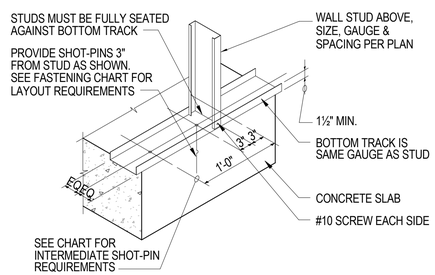

C4 WALL TYPES - METAL STUD - TYP. BOT. TRACK ANCHORAGE TO CONC SLAB-ON GRADE OR ELEVATED DECK
3/4" = 1'-0"

DEPTH OF TRACK OR STUDS	STUD SCREWS TO JAMB	TRACK SCREWS TO JAMB
12 INCHES	2-ROWS OF 4 EACH SIDE 16-TOTAL	1-ROW OF 4 TOP AND BOTTOM 8-TOTAL
10 INCHES	2-ROWS OF 3 EACH SIDE 12-TOTAL	1-ROW OF 4 TOP AND BOTTOM 8-TOTAL
8 INCHES	2-ROWS OF 3 EACH SIDE 12-TOTAL	1-ROW OF 3 TOP AND BOTTOM 6-TOTAL
6 INCHES	2-ROWS OF 3 EACH SIDE 12-TOTAL	1-ROW OF 3 TOP AND BOTTOM 6-TOTAL
4 INCHES	2-ROWS OF 2 EACH SIDE 8-TOTAL	1-ROW OF 3 TOP AND BOTTOM 6-TOTAL

NOTE:
1. All connections are to be made with #10 screws.

C2 WALL TYPES - METAL STUD - STEEL STUD CONNECTION SCHEDULE
3/4" = 1'-0"

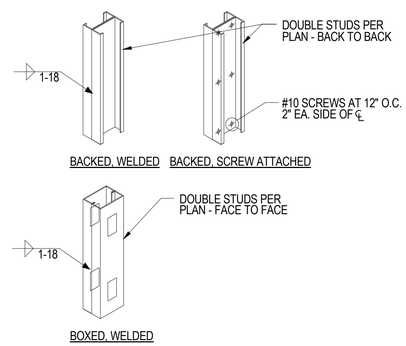

C1 WALL TYPES - METAL STUD - JAMB AT VERTICAL OPENINGS
3/4" = 1'-0"

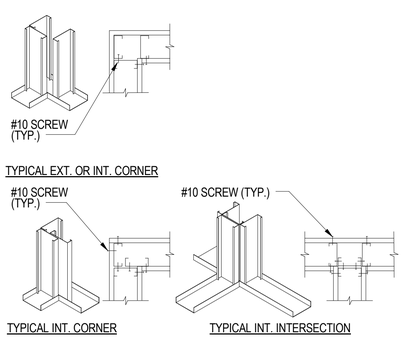

D5 WALL TYPES - METAL STUD - WALL INTERSECTIONS
3/4" = 1'-0"

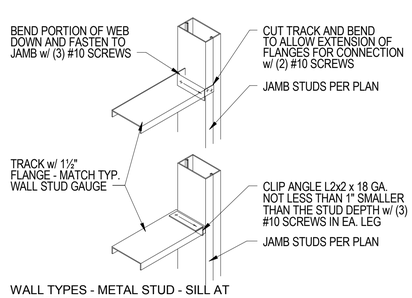

D4 WALL TYPES - METAL STUD - SILL AT FRAMED OPENINGS
3/4" = 1'-0"

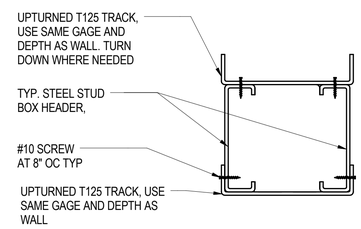

D3 WALL TYPES - METAL STUD - BOX HEADER
3/4" = 1'-0"

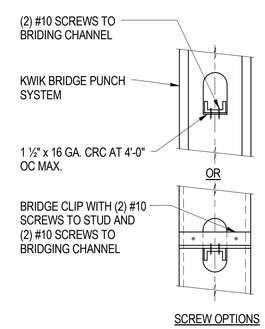

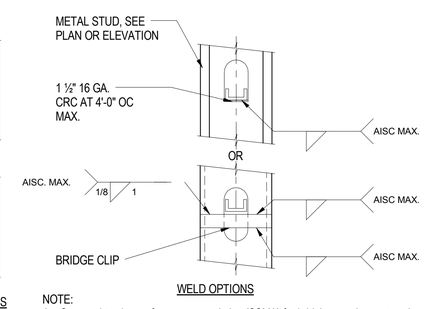

NOTE:
1. See steel stud manufacturers association (SSMA) for bridging requirements at interior non-structural walls.

D1 WALL TYPES - METAL STUD - COLD-ROLLED CHANNEL BRIDGING
1/2" = 1'-0"

ARCHITECT:

COLE ARCHITECTS

COLE ARCHITECTS | 802 W. BANNOCK SUIT 208
Boise, ID 83702 | (208) 345-1800

TCA
architecture • planning
TCA | 6211 Roosevelt Way NE
Seattle, WA 98115 | (206) 522-3820

STAMP:

NOT FOR CONSTRUCTION

CONSULTANT:

PROJECT INFORMATION:

City of Boise Fire Station 4
8485 W Ustick Rd, Boise, ID 83704

REVISIONS:

MARK	DATE	DESCRIPTION

PROJECT PHASE	75% CD'S
PROJECT NUMBER	15-27
PROJECT MANAGER	J. Chatfield
PROJECT ARCHITECT	J. Chatfield
DESIGN	J. Chatfield
DRAWN BY	J. Chatfield, C. Clay, R. Stewart

SHEET NAME:

WALL TYPES DETAILS

SHEET NUMBER:

A601

02.02.16

DOOR AND FRAME SCHEDULE

IDENTIFICATION			DOOR							FRAME							HW		
													FRAME DETAIL						
ROOM NO.	ROOM NAME	DOOR NO.	W	H	T	TYPE	MATL	FINISH	GLAZING	TYPE	MATL	FINISH	HEAD	JAMB	SILL	LBL	GROUP	ELECTRICAL	REMARKS
100	LOBBY/AID	100	7' - 8"	8' - 10"	0' - 1 3/4"	A	ALSF	CLR ANO	TG	1	ALSF	CLR ANO							
103	B.C. DORM	101A	3' - 0"	7' - 0"	0' - 1 3/4"	D	WD	VEEN-1	TG	4	HM	PT-1							
103	B.C. DORM	101B	3' - 0"	7' - 0"	0' - 1 3/4"	D	WD	VEEN-1	TG	5	HM	PT-1							
103	B.C. DORM	101C	3' - 0"	7' - 0"	0' - 1 3/4"	D	WD	VEEN-1	TG	5	HM	PT-1							
103	B.C. DORM	101D	3' - 0"	7' - 10"	0' - 1 3/4"	B	ALSF	CLR ANO	TG	2	ALSF	CLR ANO							
102	B.C. OFFICE	102	3' - 0"	7' - 0"	0' - 1 3/4"	D	WD	VEEN-1	TG	4	HM	PT-1							
103	B.C. DORM	103	3' - 0"	7' - 0"	0' - 1 3/4"	C	WD	VEEN-1	-	4	HM	PT-1							
103	B.C. DORM	104	3' - 0"	7' - 0"	0' - 1 3/4"	C	WD	VEEN-1	-	4	HM	PT-1							
103	B.C. DORM	105	3' - 0"	7' - 0"	0' - 1 3/4"	C	WD	VEEN-1	-	4	HM	PT-1							
105	CAPT. DORM	106	3' - 0"	7' - 0"	0' - 1 3/4"	C	WD	VEEN-1	-	4	HM	PT-1							
103	B.C. DORM	107	3' - 0"	7' - 0"	0' - 1 3/4"	C	WD	VEEN-1	-	4	HM	PT-1							
107	CAPT. DORM	108	3' - 0"	7' - 0"	0' - 1 3/4"	C	WD	VEEN-1	-	4	HM	PT-1							
110	DORM	110	3' - 0"	7' - 0"	0' - 1 3/4"	C	WD	VEEN-1	-	4	HM	PT-1							
111	DORM	111	3' - 0"	7' - 0"	0' - 1 3/4"	C	WD	VEEN-1	-	4	HM	PT-1							
112	DORM	112	3' - 0"	7' - 0"	0' - 1 3/4"	C	WD	VEEN-1	-	4	HM	PT-1							
113	DORM	113	3' - 0"	7' - 0"	0' - 1 3/4"	C	WD	VEEN-1	-	4	HM	PT-1							
114	STORAGE	114	3' - 0"	7' - 0"	0' - 1 3/4"	C	WD	VEEN-1	-	4	HM	PT-1							
115	DORM	115	3' - 0"	7' - 0"	0' - 1 3/4"	C	WD	VEEN-1	-	4	HM	PT-1							
116	DORM	116	3' - 0"	7' - 0"	0' - 1 3/4"	C	WD	VEEN-1	-	4	HM	PT-1							
117	DORM	117	3' - 0"	7' - 0"	0' - 1 3/4"	C	WD	VEEN-1	-	4	HM	PT-1							
103	B.C. DORM	118	3' - 0"	7' - 0"	0' - 1 3/4"	C	WD	VEEN-1	-	4	HM	PT-1							
103	B.C. DORM	119	3' - 0"	7' - 0"	0' - 1 3/4"	C	WD	VEEN-1	-	4	HM	PT-1							
120	SHOWER/ RESTROOM	120	3' - 0"	7' - 0"	0' - 1 3/4"	C	WD	VEEN-1	-	4	HM	PT-1							
103	B.C. DORM	121	3' - 0"	7' - 0"	0' - 1 3/4"	C	WD	VEEN-1	-	4	HM	PT-1							
103	B.C. DORM	122	3' - 0"	7' - 0"	0' - 1 3/4"	C	WD	VEEN-1	-	4	HM	PT-1							
103	B.C. DORM	123	3' - 0"	7' - 0"	0' - 1 3/4"	C	WD	VEEN-1	-	4	HM	PT-1							
126	ELECT RM	125	3' - 0"	7' - 0"	0' - 1 3/4"	C	WD	VEEN-1	-	4	HM	PT-1							
126	ELECT RM	126	3' - 0"	7' - 0"	0' - 1 3/4"	C	WD	VEEN-1	-	4	HM	PT-1							
103	B.C. DORM	127	3' - 0"	7' - 0"	0' - 1 3/4"	C	WD	VEEN-1	-	4	HM	PT-1							
135	APPARATUS	128	3' - 0"	7' - 0"	0' - 1 3/4"	C	WD	VEEN-1	-	5	HM	PT-1							
135	APPARATUS	129	3' - 0"	7' - 0"	0' - 1 3/4"	C	WD	VEEN-1	-	5	HM	PT-1							
133	CAPT. OFFICE	133	3' - 0"	7' - 0"	0' - 1 3/4"	D	WD	VEEN-1	TG	4	HM	PT-1							
135	APPARATUS	135A	14' - 0"	14' - 0"	0' - 1 3/4"	H	MTL	FF	TG		HM	PT-2							
135	APPARATUS	135B	14' - 0"	14' - 0"	0' - 1 3/4"	H	MTL	FF	TG		HM	PT-2							
135	APPARATUS	135C	14' - 0"	14' - 0"	0' - 1 3/4"	H	MTL	FF	TG		HM	PT-2							
135	APPARATUS	135D	14' - 0"	14' - 0"	0' - 2"	I	MTL	FF	TG		HM	PT-2							
135	APPARATUS	135E	14' - 0"	14' - 0"	0' - 2"	I	MTL	FF	TG		HM	PT-2							
135	APPARATUS	135F	14' - 0"	14' - 0"	0' - 2"	I	MTL	FF	TG		HM	PT-2							
135	APPARATUS	135G	3' - 0"	7' - 0"	0' - 1 3/4"	D	MTL	PT-2	TG	5	HM	PT-2							INS
135	APPARATUS	136	3' - 0"	7' - 0"	0' - 1 3/4"	C	WD	VEEN-1	-	5	HM	PT-1							
135	APPARATUS	137	3' - 0"	7' - 0"	0' - 1 3/4"	C	WD	VEEN-1	-	5	HM	PT-1							
138	MAINTENANCE/ SHOP	138	6' - 0"	7' - 0"	0' - 1 3/4"	E	WD	VEEN-1	-	5	HM	PT-1							
139	FIRE RISER	139	3' - 0"	7' - 0"	0' - 1 3/4"	C	MTL	PT-2	-	5	HM	PT-2							INS
140	SCBA FILL/CASCADE	140	6' - 0"	7' - 0"	0' - 1 3/4"	E	WD	VEEN-1	-	5	HM	PT-1							
135	APPARATUS	141	3' - 0"	7' - 0"	0' - 1 3/4"	C	WD	VEEN-1	-	5	HM	PT-1							
142	STORAGE	142	6' - 0"	7' - 0"	0' - 1 3/4"	E	WD	VEEN-1	-		HM	PT-1							
143	STOR.	143	3' - 0"	7' - 0"	0' - 1 3/4"	C	WD	VEEN-1	-	4	HM	PT-1							
201	HALL	202A	3' - 0"	7' - 0"	0' - 1 3/4"	G	ALSF	CLR ANO	TG	3	ALSF	CLR ANO							
209	DAYROOM	202B	3' - 0"	7' - 0"	0' - 1 3/4"	C	MTL	PT-2	-	5	HM	PT-2							INS
201	HALL	203	3' - 0"	7' - 0"	0' - 1 3/4"	C	WD	VEEN-1	-	4	HM	PT-1							
204	JANITOR	204	3' - 0"	7' - 0"	0' - 1 3/4"	C	WD	VEEN-1	-	4	HM	PT-1							
205	RESTROOM	205	3' - 0"	7' - 0"	0' - 1 3/4"	C	WD	VEEN-1	-	4	HM	PT-1							
206	STORAGE	206	3' - 0"	7' - 0"	0' - 1 3/4"	C	WD	VEEN-1	-	4	HM	PT-1							
207	TRAINING CLASSROOM	207A	3' - 0"	7' - 0"	0' - 3"	C	WD	VEEN-1	TG	3	HM	PT-1							
207	TRAINING CLASSROOM	207B	3' - 0"	7' - 0"	0' - 3"	C	WD	VEEN-1	TG	3	HM	PT-1							
208	FITNESS	208A	3' - 0"	7' - 0"	0' - 3"	C	WD	VEEN-1	TG	3	HM	PT-1							
208	FITNESS	208B	6' - 0"	7' - 0"	0' - 2"	F	ALSF	CLR ANO	TG	4	ALSF	CLR ANO							

DOOR SCHEDULE ABBREVIATIONS:

ALSF	ALUMINUM STORE FRONT
ALUM	ALUMINUM
CLR	CLEAR ANODIZED ALUMINUM
EXT	EXTERIOR
FF	FACTORY FINISH
GL	GLASS
HM	HOLLOW METAL
INS	INSULATED
LAM	LAMINATE
MTL	METAL
PT	PAINT
TG	TEMPERED SAFETY GLASS
WD	WOOD

* SEE SPECIFICATIONS FOR DOOR HARDWARE SCHEDULE

GENERAL NOTES DOOR SCHEDULE:

A. REFER TO SHEET ID100 FOR ADDITIONAL FINISH ABBREVIATIONS.

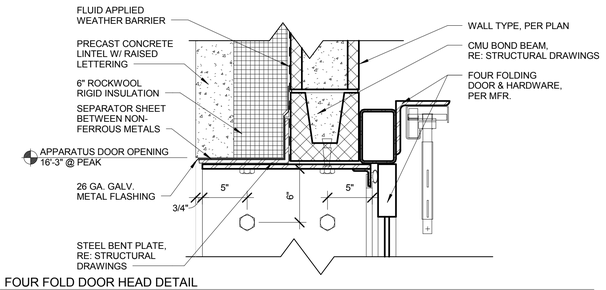

1 FOUR FOLD DOOR HEAD DETAIL
1 1/2" = 1'-0"

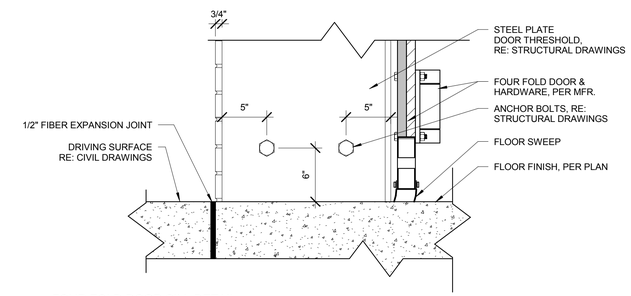

2 FOUR FOLD DOOR SILL DETAIL
1 1/2" = 1'-0"

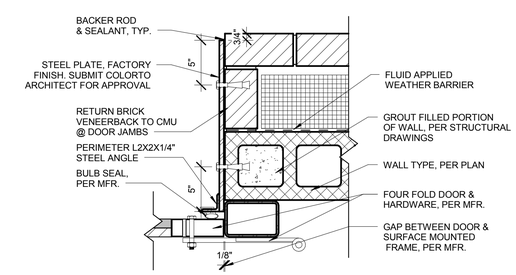

3 FOUR FOLD DOOR JAMB DETAIL
1 1/2" = 1'-0"

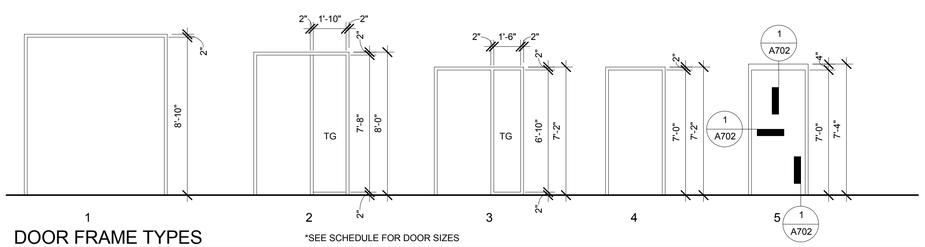

DOOR FRAME TYPES
1/4" = 1'-0"

*SEE SCHEDULE FOR DOOR SIZES

ABBREVIATIONS:

ABBREVIATION	DESCRIPTION
TG	TEMPERED SAFETY GLAZING
SG	SPECIAL GLAZING

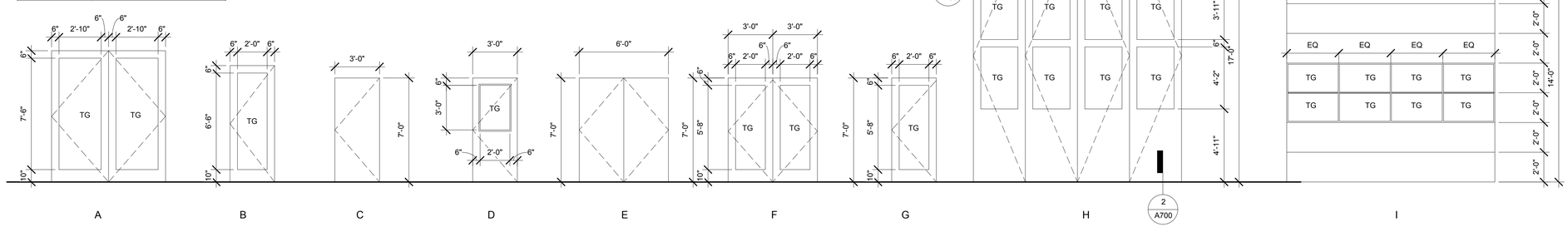

*SEE PLANS FOR SWING DIRECTION ON ALL DOORS

DOOR TYPES
1/4" = 1'-0"

ARCHITECT:

COLE ARCHITECTS

COLE ARCHITECTS | 802 W. BANNOCK SUIT 208
Boise, ID 83702 | (208) 345-1800

TCA architecture • planning

TCA | 6211 Roosevelt Way NE
Seattle, WA 98115 | (206) 522-3820

STAMP:

NOT FOR CONSTRUCTION

CONSULTANT:

PROJECT INFORMATION:

City of Boise Fire Station 4

8485 W Ustick Rd, Boise, ID 83704

REVISIONS:

MARK	DATE	DESCRIPTION

PROJECT PHASE	75% CD'S
PROJECT NUMBER	15-27
PROJECT MANAGER	J. Chatfield
PROJECT ARCHITECT	J. Chatfield
DESIGN	J. Chatfield
DRAWN BY	J. Chatfield, C. Clay, R. Stewart

SHEET NAME:

DOOR SCHEDULE, TYPES & DETAILS

SHEET NUMBER:

A700

02.02.16

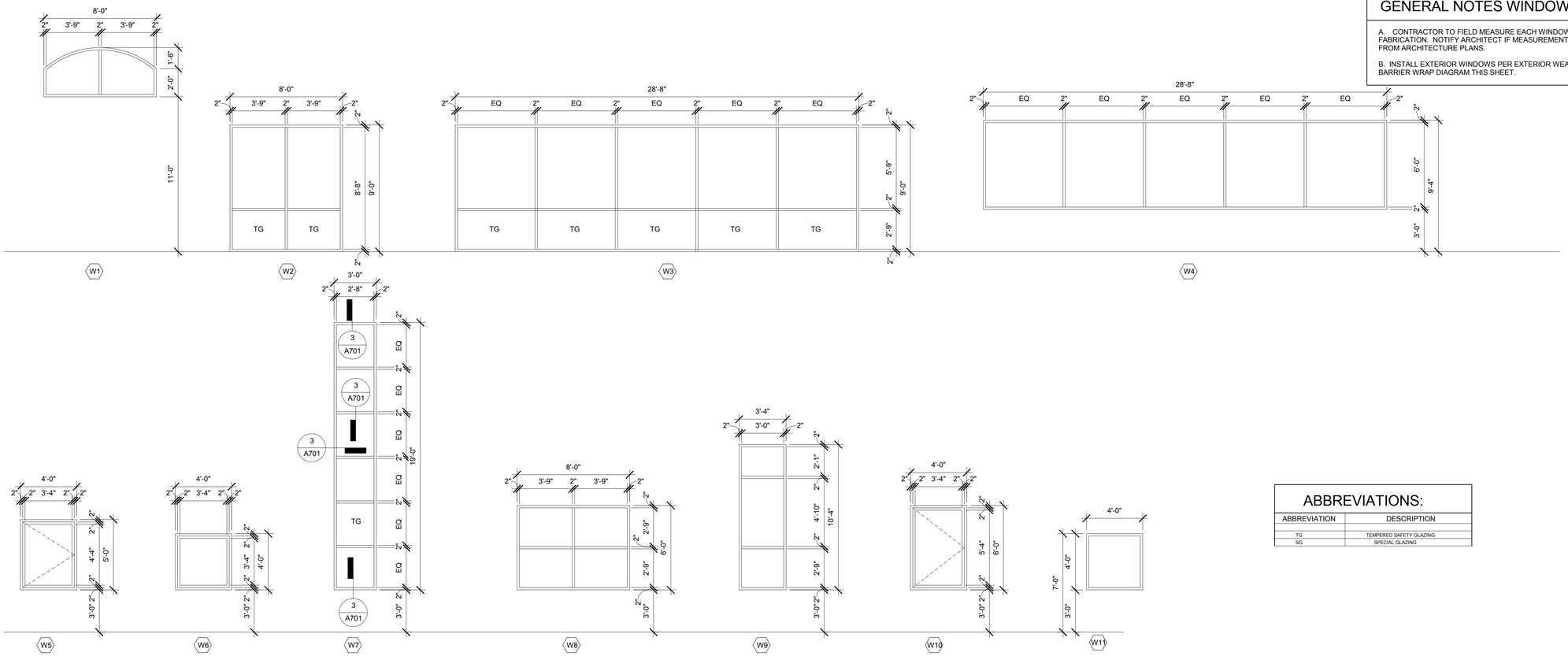

GENERAL NOTES WINDOWS:

A. CONTRACTOR TO FIELD MEASURE EACH WINDOW PRIOR TO FABRICATION. NOTIFY ARCHITECT IF MEASUREMENTS DIFFER FROM ARCHITECTURE PLANS.

B. INSTALL EXTERIOR WINDOWS PER EXTERIOR WEATHER BARRIER WRAP DIAGRAM THIS SHEET.

ABBREVIATIONS:

ABBREVIATION	DESCRIPTION
TG	TEMPERED SAFETY GLAZING
SG	SPECIAL GLAZING

WINDOW TYPES

1/4" = 1'-0"

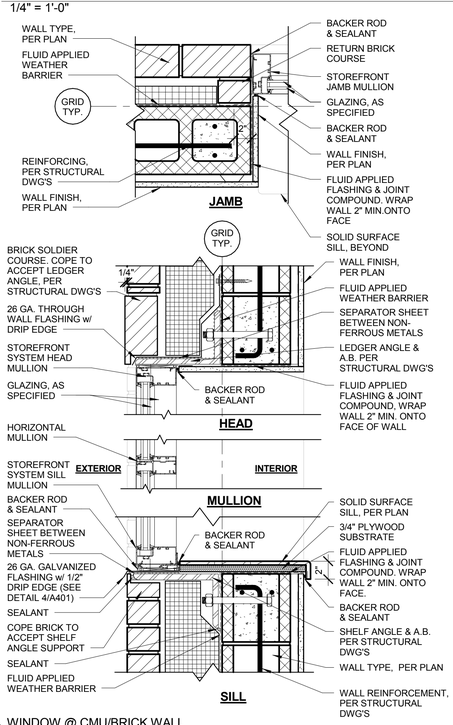

2 WINDOW @ CMU/BRICK WALL
1 1/2" = 1'-0"

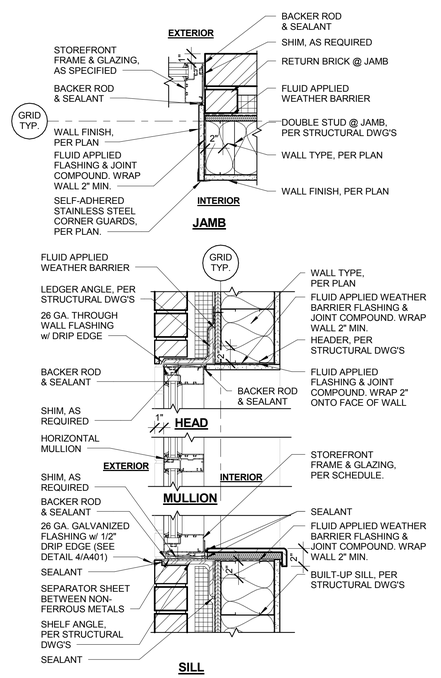

3 WINDOW @ METAL STUD WALL
1 1/2" = 1'-0"

ARCHITECT:

COLE ARCHITECTS

COLE ARCHITECTS | 802 W. BANNOCK SUIT 208
Boise, ID 83702 | (208) 345-1800

TCA architecture • planning

TCA | 6211 Roosevelt Way NE
Seattle, WA 98115 | (206) 522-3820

STAMP:

NOT FOR CONSTRUCTION

CONSULTANT:

PROJECT INFORMATION:

City of Boise Fire Station 4

8485 W Ustick Rd, Boise, ID 83704

REVISIONS:

MARK	DATE	DESCRIPTION

PROJECT PHASE	75% CD'S
PROJECT NUMBER	15-27
PROJECT MANAGER	J. Chatfield
PROJECT ARCHITECT	J. Chatfield
DESIGN	J. Chatfield
DRAWN BY	J. Chatfield, C. Clay, R. Stewart

SHEET NAME:

WINDOW TYPES & DETAILS

SHEET NUMBER:

A701

02.02.16

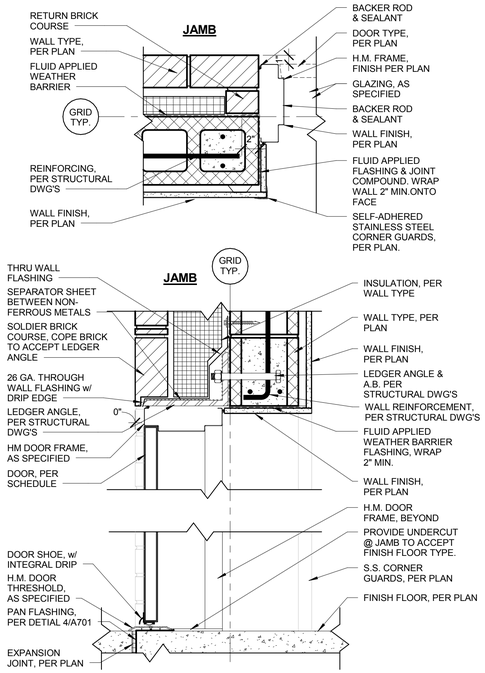

1 DOOR @ CMU/BRICK WALL
1 1/2" = 1'-0"

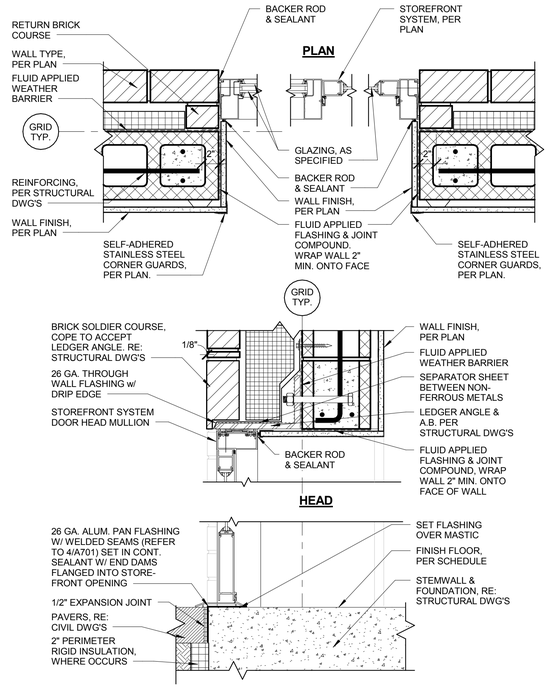

2 S.F. DOOR W/SIDELITE @ CMU/BRICK WALL
1 1/2" = 1'-0"

GENERAL NOTES DOOR SCHEDULE:

A. REFER TO SHEET ID100 FOR ADDITIONAL FINISH ABBREVIATIONS.

A

ARCHITECT:

COLE ARCHITECTS

COLE ARCHITECTS | 802 W. BANNOCK SUIT 208
Boise, ID 83702 | (208) 345-1800

TCA architecture • planning

TCA | 6211 Roosevelt Way NE
Seattle, WA 98115 | (206) 522-3820

STAMP:

NOT FOR CONSTRUCTION

CONSULTANT:

PROJECT INFORMATION:

BOISE CITY OF TREES

BOISE FIRE DEDICATION

City of Boise Fire Station 4

8485 W Ustick Rd, Boise, ID 83704

REVISIONS:

MARK	DATE	DESCRIPTION

PROJECT PHASE	75% CD'S
PROJECT NUMBER	15-27
PROJECT MANAGER	J. Chatfield
PROJECT ARCHITECT	J. Chatfield
DESIGN	J. Chatfield
DRAWN BY	J. Chatfield, C. Clay, R. Stewart

SHEET NAME:

DETAILS

SHEET NUMBER:

A702

02.02.16

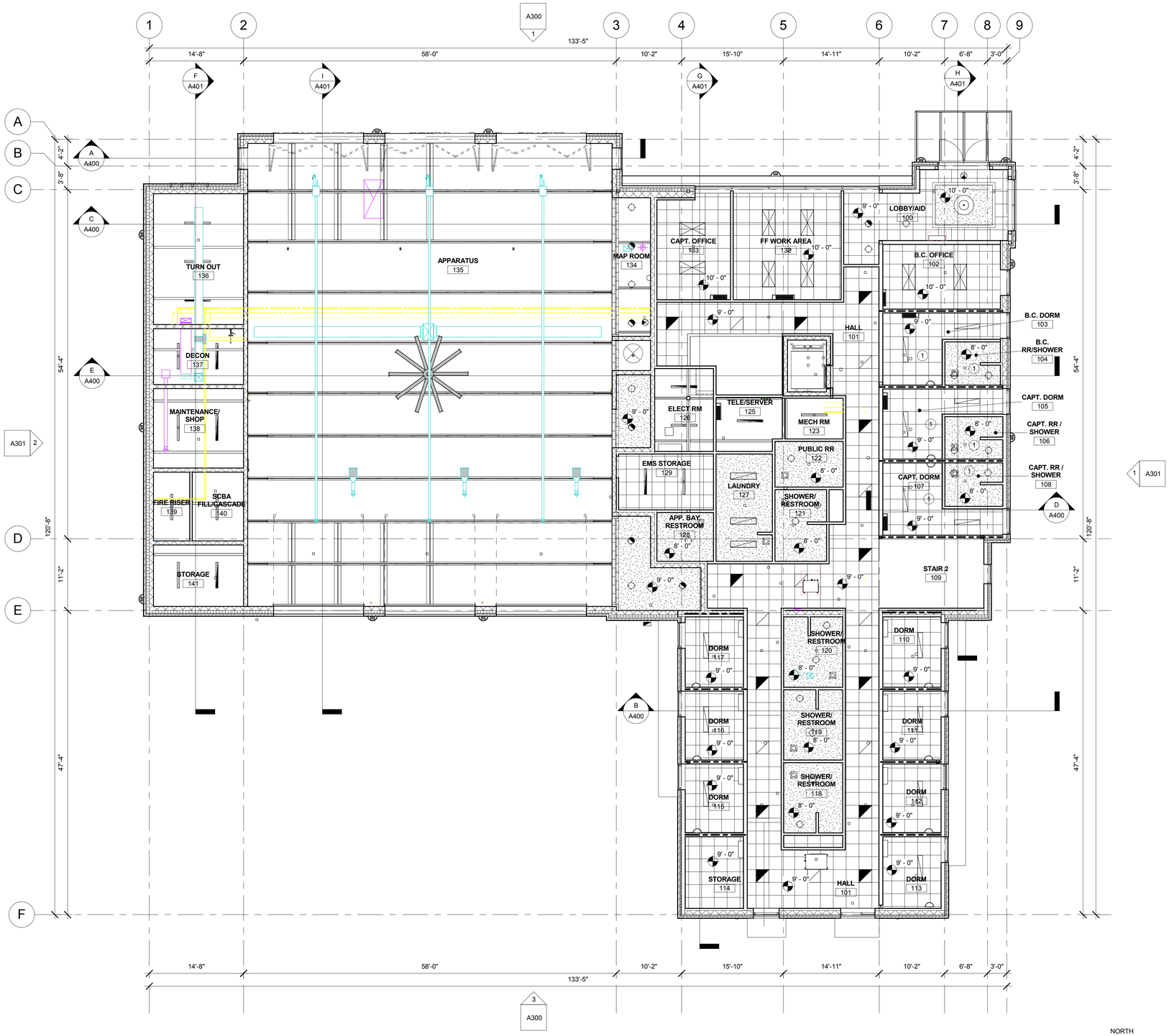

1ST FLOOR REFLECTED CEILING
1/8" = 1'-0"

GENERAL NOTES REFLECTED CEILING:

A. SUBCONTRACTORS FOR EACH TRADE ARE ADVISED THAT INFORMATION PERTINENT TO THEIR WORK MAY OCCUR IN OTHER PORTIONS OF THE CONTRACT DOCUMENTS. ALL NOTES ARE TO BE REVIEWED AND APPLIED TO RELATED BUILDING DOCUMENTS.

B. FIELD VERIFY ALL DIMENSIONS AND EXISTING CONDITIONS. NOTIFY ARCHITECT IMMEDIATELY IF ANY CONFLICTS OR DISCREPANCIES OCCUR BEFORE AND/OR DURING CONSTRUCTION.

C. CROSS REFERENCES SHOWN ON DRAWINGS DO NOT NECESSARILY INDICATE ALL LIKE CONDITIONS AND DO NOT LIMIT APPLICATION OF ANY DRAWING OR DETAIL. WHERE SPECIFIC DIMENSIONS, DETAILS, OR DESIGN INTENT CANNOT BE DETERMINED, CONSULT THE ARCHITECT PRIOR TO PROCEEDING WITH WORK.

D. REVIEW SPECIFICATIONS FOR INSTRUCTIONS NOT SHOWN ON DRAWINGS. INFORMATION COMMON TO SEVERAL DRAWINGS MAY BE NOTED ON ONLY ONE. CONTRACTOR IS RESPONSIBLE FOR ENTIRE SET OF DOCUMENTS.

E. COORDINATE WITH MECHANICAL AND ELECTRICAL DRAWINGS AND SPECIFICATIONS FOR ADDITIONAL ITEMS NOT SHOWN TO BE PROVIDED AT THE CEILING PLANE AND IN THE SCOPE OF WORK. COORDINATE WITH DRAWINGS AND SPECIFICATIONS FOR PHYSICAL SIZE OF ALL CEILING GRILLS, DIFFUSERS, FIXTURES, LIGHTS AND ALL RELATED ITEMS.

F. DIMENSIONS ARE TO STRUCTURAL GRIDLINE OR FACE OF STUD UNLESS NOTED OTHERWISE.

G. CENTER ALL CEILING GRID, LIGHT FIXTURES AND SPRINKLER HEADS IN THEIR RESPECTIVE CEILING PANEL. IF NOT DIMENSIONED LOCATE EVENLY AND CENTER IN SPACES. IF UNCLEAR, CONSULT ARCHITECT FOR LOCATION.

H. INSTALL ALL SUSPENSION SYSTEMS FOR ACOUSTICAL PANEL CEILINGS PER THE SPECIFICATION AND C.I.S.C.A. "RECOMMENDATIONS FOR DIRECT-HUNG SEISMIC DESIGN CATEGORY C. REFER TO IBC SECTION 803.9.1.1: SUSPENDED ACOUSTICAL CEILINGS. COMPLY WITH ASTM C635 AND C136.

I. INSTALL ALL SUSPENSION SYSTEMS FOR GYPSUM BOARD CEILINGS PER THE SPECIFICATIONS AND ASTM C754.

J. Q. REFER TO ELECTRICAL DRAWINGS FOR QUANTITY AND TYPE OF LIGHTS, SPEAKERS, DETECTORS, POWER OUTLETS, ETC. SCRIBE CEILING MATERIALS CAREFULLY. WHERE NO DEVICES ARE SHOWN ON PLANS, FIELD VERIFY LOCATION & QUANTITY OF DEVICES IN EXISTING CEILING. THESE DEVICES WILL BE RELOCATED TO THE NEW CEILING.

K. COORDINATE ALL ACCESS PANEL LOCATIONS WITH STRUCTURAL FRAMING AND SUSPENDED CEILING SYSTEMS TO ACCOMMODATE SIZES INDICATED.

L. ALL GYPSUM BOARD CEILINGS TO BE TEXTURED AND PAINTED UNLESS NOTED OTHERWISE.

M. ALL EXPOSED METAL DECK, CONDUIT, DUCTWORK, JOISTS, AND MISCELLANEOUS ITEMS ARE TO BE PAINTED.

N. PROVIDE GYPSUM WALL BOARD AND METAL STUD BULKHEADS WHERE CEILINGS OF DIFFERENT HEIGHTS ABUT. DO NOT BUILD BULKHEADS OF ACOUSTICAL CEILING MATERIALS UNLESS SPECIFICALLY DETAILED.

O. REFER TO MECHANICAL DRAWINGS FOR QUANTITY AND TYPE OF DIFFUSERS, RETURN AIR GRILLES, AND EXHAUST GRILLES. SCRIBE CEILING MATERIALS CAREFULLY FOR A TIGHT FIT.

RCP SYMBOL LEGEND

- 2X4 ACOUSTICAL TILE CEILING SYSTEM
- GYPSUM CEILING - TEXTURED & PAINTED
- LIGHT FIXTURE 2X4, RE: ELECTRICAL DRAWINGS
- LIGHT FIXTURE 2 X 2, RE: ELECTRICAL DRAWINGS
- RECESSED LIGHT, RE: ELECTRICAL DRAWINGS
- SMOKE DETECTOR, RE: ELECTRICAL DRAWINGS
- SPEAKER, RE: ELECTRICAL DRAWINGS
- EXIT LIGHT, RE: ELECTRICAL DRAWINGS
- HVAC /DIFFUSER, RE: MECHANICAL DRAWINGS
- HVAC RETURN, RE: MECHANICAL DRAWINGS

KEY NOTES:

1. 1 HR CEILING, CONSTRUCT PER xxxxXXXXXxxxxxx

ARCHITECT:

COLE ARCHITECTS
COLE ARCHITECTS | 802 W. BANNOCK SUIT 208
Boise, ID 83702 | (208) 345-1800

TCA architecture • planning
TCA | 6211 Roosevelt Way NE
Seattle, WA 98115 | (206) 522-3820

STAMP:

NOT FOR CONSTRUCTION

CONSULTANT:

PROJECT INFORMATION:

City of Boise Fire Station 4

8485 W Ustick Rd, Boise, ID 83704

REVISIONS:

MARK	DATE	DESCRIPTION

PROJECT PHASE	75% CD'S
PROJECT NUMBER	15-27
PROJECT MANAGER	J. Chatfield
PROJECT ARCHITECT	J. Chatfield
DESIGN	J. Chatfield
DRAWN BY	J. Chatfield, C. Clay, R. Stewart

SHEET NAME:

1ST FLOOR REFLECTED CEILING PLAN

SHEET NUMBER:

A800

02.02.16

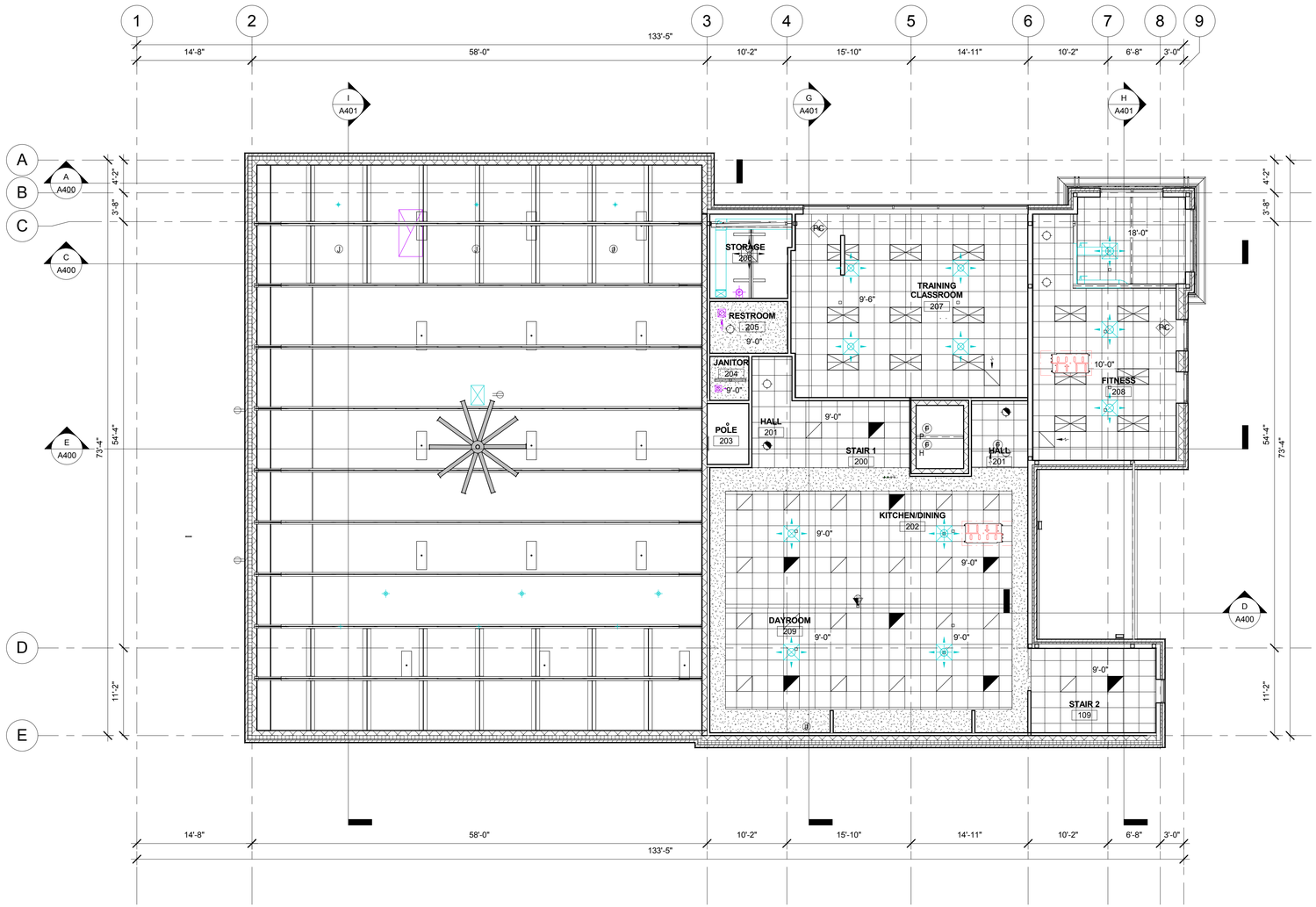

2ND FLOOR REFLECTED CEILING

1/8" = 1'-0"

NORTH

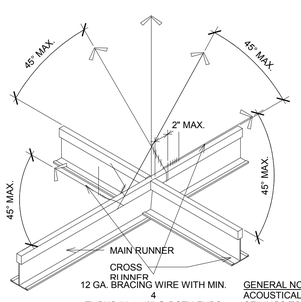

GENERAL NOTE:
ACOUSTICAL SUSPENDED CEILINGS TO ALSO BE INSTALLED PER MANUFACTURER'S RECOMMENDATIONS, IBC 2006, AND ASTM C 635 AND ASTM C 636.

Suspended Ceiling Seismic Provisions from CISCA 0-2 for Design Class C

1. Each individual fixture and attachments with a combined weight of 56 lbs. or less shall have two No. 12 gauge wire hangers attached at diagonal corners of the fixture. These wires must be slack. Any fixtures and attachments with a combined weight greater that 56 lbs. must be independently supported from the structure.
2. The main runner/cross runner intersections and all grid splices must have an average ultimate test strength of 60 lbs. or more in both tension and compression. The tensile test must allow for a 5° offset of the connection in any direction.
3. The actual average weight of the ceiling system, including grid, panels or tile, light fixtures, and air terminals must be 2.5 psf or less. All other services must be supported independently from the ceiling system. For ceilings that have an average weight greater than 2.5 psf, the ceiling may be installed as specified in CISCA Zone 3-4 provisions, taking into account the design lateral force factor appropriate for Zone 2. Other deviations or variations must be substantiated by verifiable engineering data.
4. The ceiling system cannot be used to provide lateral support for walls or partitions. Walls or partitions may be attached to the ceiling grid provided they allow the ceiling membrane to move laterally to accommodate the required clearance as specified below.
5. All perimeter closure angles or channels must provide a support ledge of approximately 7/8 in. or greater. A terminal end of a grid member (or tile) must rest on the ledger or molding with at least 3/8 in. clearance from an edge or wall.

For perimeter closure angles that provide a support ledge of less than noted above, the terminal ends of each cross runner or main runner shall be independently supported within 8 in. from each wall or ceiling discontinuity. This support may be a No. 12 gauge hanger wire or other support that prevents the grid from falling. This wire does not need to be vertical but should not have a slope greater than 1 in 6 out- of-plumb. A 3/8 in. grid end clearance from a wall should be maintained.

All ceiling penetrations (columns, sprinklers, etc.) and independently supported fixtures or services are to be considered as perimeter closures that also must allow the noted clearances by using suitable escutcheons or closure details.

6. At wall closure ledges, the cross runner and main runner ends shall be prevented from spreading apart from each other. Permanent attachments (i.e. pop rivets) for grid alignment purposed shall not be permitted.

GENERAL NOTES REFLECTED CEILING:

A. SUBCONTRACTORS FOR EACH TRADE ARE ADVISED THAT INFORMATION PERTINENT TO THEIR WORK MAY OCCUR IN OTHER PORTIONS OF THE CONTRACT DOCUMENTS. ALL NOTES ARE TO BE REVIEWED AND APPLIED TO RELATED BUILDING DOCUMENTS.

B. FIELD VERIFY ALL DIMENSIONS AND EXISTING CONDITIONS. NOTIFY ARCHITECT IMMEDIATELY IF ANY CONFLICTS OR DISCREPANCIES OCCUR BEFORE AND/OR DURING CONSTRUCTION.

C. CROSS REFERENCES SHOWN ON DRAWINGS DO NOT NECESSARILY INDICATE ALL LIKE CONDITIONS AND DO NOT LIMIT APPLICATION OF ANY DRAWING OR DETAIL. WHERE SPECIFIC DIMENSIONS, DETAILS, OR DESIGN INTENT CANNOT BE DETERMINED, CONSULT THE ARCHITECT PRIOR TO PROCEEDING WITH WORK.

D. REVIEW SPECIFICATIONS FOR INSTRUCTIONS NOT SHOWN ON DRAWINGS. INFORMATION COMMON TO SEVERAL DRAWINGS MAY BE NOTED ON ONLY ONE. CONTRACTOR IS RESPONSIBLE FOR ENTIRE SET OF DOCUMENTS.

E. COORDINATE WITH MECHANICAL AND ELECTRICAL DRAWINGS AND SPECIFICATIONS FOR ADDITIONAL ITEMS NOT SHOWN TO BE PROVIDED AT THE CEILING PLANE AND IN THE SCOPE OF WORK. COORDINATE WITH DRAWINGS AND SPECIFICATIONS FOR PHYSICAL SIZE OF ALL CEILING GRILLS, DIFFUSERS, FIXTURES, LIGHTS AND ALL RELATED ITEMS.

F. DIMENSIONS ARE TO STRUCTURAL GRIDLINE OR FACE OF STUD UNLESS NOTED OTHERWISE.

G. CENTER ALL CEILING GRID, LIGHT FIXTURES AND SPRINKLER HEADS IN THEIR RESPECTIVE CEILING PANEL. IF NOT DIMENSIONED LOCATE EVENLY AND CENTER IN SPACES. IF UNCLEAR, CONSULT ARCHITECT FOR LOCATION.

H. INSTALL ALL SUSPENSION SYSTEMS FOR ACOUSTICAL PANEL CEILINGS PER THE SPECIFICATION AND C.I.S.C.A. "RECOMMENDATIONS FOR DIRECT-HUNG SEISMIC DESIGN CATEGORY C. REFER TO IBC SECTION 803.9.1.1: SUSPENDED ACOUSTICAL CEILINGS. COMPLY WITH ASTM C635 AND C136.

I. INSTALL ALL SUSPENSION SYSTEMS FOR GYPSUM BOARD CEILINGS PER THE SPECIFICATIONS AND ASTM C754.

J. Q. REFER TO ELECTRICAL DRAWINGS FOR QUANTITY AND TYPE OF LIGHTS, SPEAKERS, DETECTORS, POWER OUTLETS, ETC. SCRIBE CEILING MATERIALS CAREFULLY. WHERE NO DEVICES ARE SHOWN ON PLANS, FIELD VERIFY LOCATION & QUANTITY OF DEVICES IN EXISTING CEILING. THESE DEVICES WILL BE RELOCATED TO THE NEW CEILING.

K. COORDINATE ALL ACCESS PANEL LOCATIONS WITH STRUCTURAL FRAMING AND SUSPENDED CEILING SYSTEMS TO ACCOMMODATE SIZES INDICATED.

L. ALL GYPSUM BOARD CEILINGS TO BE TEXTURED AND PAINTED UNLESS NOTED OTHERWISE.

M. ALL EXPOSED METAL DECK, CONDUIT, DUCTWORK, JOISTS, AND MISCELLANEOUS ITEMS ARE TO BE PAINTED.

N. PROVIDE GYPSUM WALL BOARD AND METAL STUD BULKHEADS WHERE CEILINGS OF DIFFERENT HEIGHTS ABUT. DO NOT BUILD BULKHEADS OF ACOUSTICAL CEILING MATERIALS UNLESS SPECIFICALLY DETAILED.

O. REFER TO MECHANICAL DRAWINGS FOR QUANTITY AND TYPE OF DIFFUSERS, RETURN AIR GRILLES, AND EXHAUST GRILLES. SCRIBE CEILING MATERIALS CAREFULLY FOR A TIGHT FIT.

RCP SYMBOL LEGEND

- 2X4 ACOUSTICAL TILE CEILING SYSTEM
- GYPSUM CEILING - TEXTURED & PAINTED
- LIGHT FIXTURE 2X4, RE: ELECTRICAL DRAWINGS
- LIGHT FIXTURE 2 X 2, RE: ELECTRICAL DRAWINGS
- RECESSED LIGHT, RE: ELECTRICAL DRAWINGS
- SMOKE DETECTOR, RE: ELECTRICAL DRAWINGS
- SPEAKER, RE: ELECTRICAL DRAWINGS
- EXIT LIGHT, RE: ELECTRICAL DRAWINGS
- HVAC /DIFFUSER, RE: MECHANICAL DRAWINGS
- HVAC RETURN, RE: MECHANICAL DRAWINGS

KEY NOTES:

1. XXX

ARCHITECT:

COLE ARCHITECTS

COLE ARCHITECTS | 802 W. BANNOCK SUIT 208
Boise, ID 83702 | (208) 345-1800

TCA architecture • planning

TCA | 6211 Roosevelt Way NE
Seattle, WA 98115 | (206) 522-3820

STAMP:

NOT FOR CONSTRUCTION

CONSULTANT:

PROJECT INFORMATION:

City of Boise Fire Station 4

8485 W Ustick Rd, Boise, ID 83704

REVISIONS:

MARK	DATE	DESCRIPTION

PROJECT PHASE	75% CD'S
PROJECT NUMBER	15-27
PROJECT MANAGER	J. Chatfield
PROJECT ARCHITECT	J. Chatfield
DESIGN	J. Chatfield
DRAWN BY	J. Chatfield, C. Clay, R. Stewart

SHEET NAME:

2ND FLOOR REFLECTED CEILING PLAN

SHEET NUMBER:

A801

02.02.16

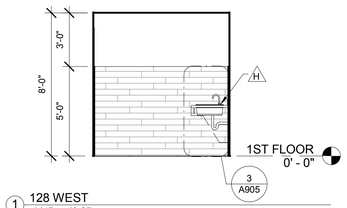

1 128 WEST
1/4" = 1'-0"

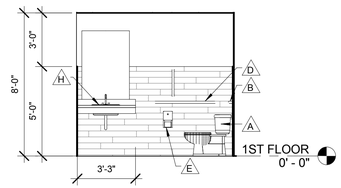

2 128 NORTH
1/4" = 1'-0"

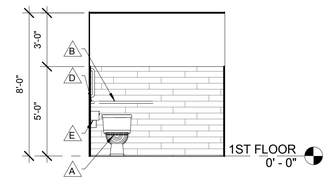

3 128 EAST
1/4" = 1'-0"

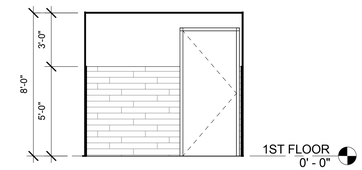

4 128 SOUTH
1/4" = 1'-0"

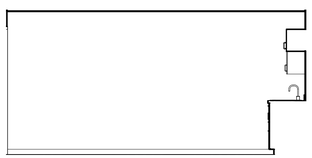

5 127 WEST
1/4" = 1'-0"

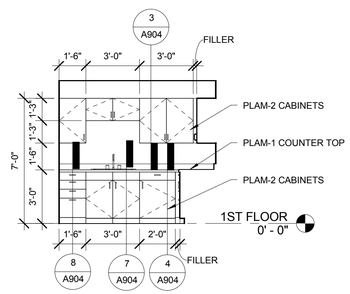

6 127 NORTH
1/4" = 1'-0"

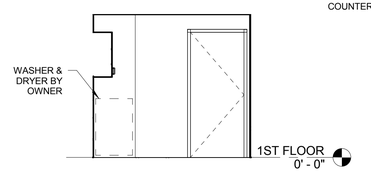

7 127 SOUTH
1/4" = 1'-0"

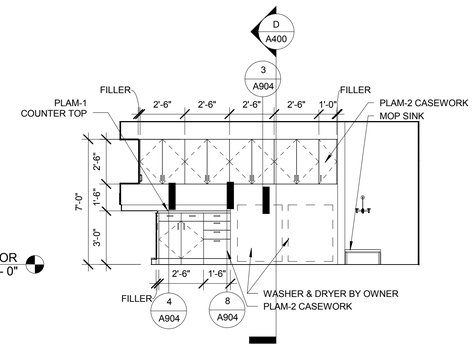

8 127 EAST
1/4" = 1'-0"

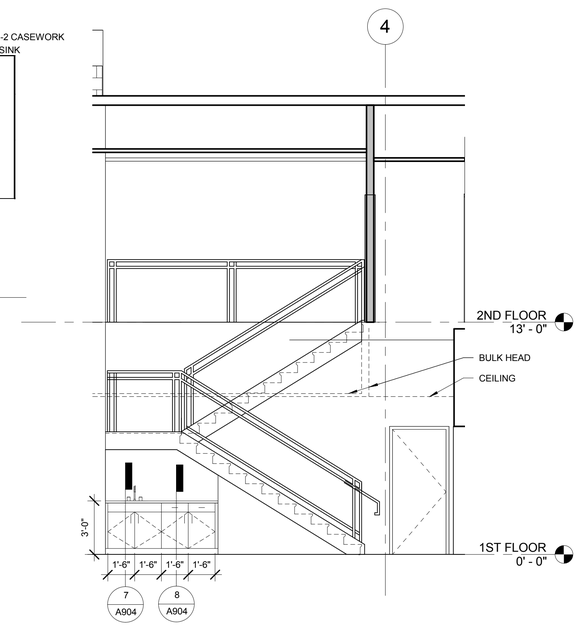

13 COFFEE BAR
1/4" = 1'-0"

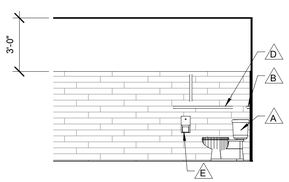

9 121 WEST
1/4" = 1'-0"

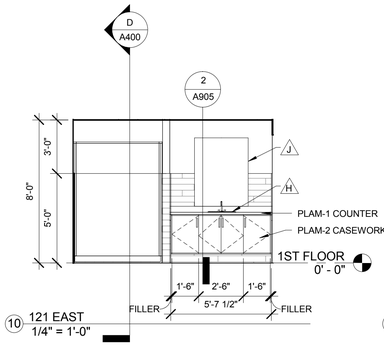

10 121 EAST
1/4" = 1'-0"

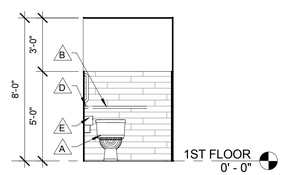

11 121 NORTH
1/4" = 1'-0"

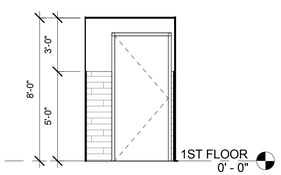

12 121 SOUTH
1/4" = 1'-0"

PROVIDE SOLID BLOCKING OR OTHER SUITABLE BACKING AT LOCATIONS INCLUDING, BUT NOT LIMITED TO, THE FOLLOWING: EDGES WHERE FINISH MATERIALS CHANGE, GRAB BARS, TOILET PARTITIONS, DOOR STOPS, SHELF BRACKETS, HANDRAILS AND ALL MOUNTED EQUIPMENT, INCLUDING EQUIPMENT FURNISHED BY OWNER. PROVIDE STEEL BACKING FOR GRAB BARS ATTACHED TO PARTITIONS. EXTEND BACKING 6" BEYOND OUTLINE OF EQUIPMENT.

*** FIXTURES BELOW ARE GRAPHIC REPRESENTATIONS ONLY, ACTUAL PRODUCTS VARY IN APPEARANCE**

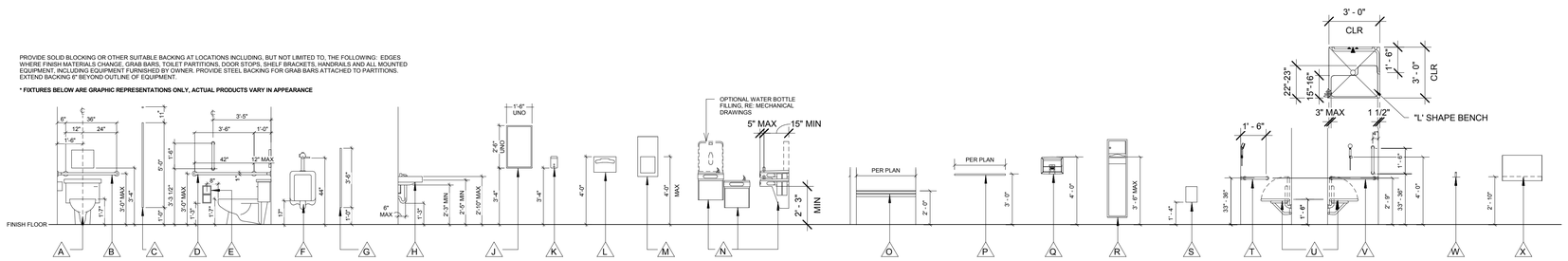

A HANDICAP ACCESSIBLE WATER CLOSET. INSTALL PER A.D.A.

B 36" STAINLESS STEEL GRAB BAR. INSTALL PER A.D.A.

C TOILET PARTITION

D 42" STAINLESS STEEL GRAB BAR. INSTALL PER A.D.A.

E TOILET TISSUE DISPENSER. -UNO AT PARTITIONS PROVIDE BRADLEY #5402. -UNO AT STUD WALL PROVIDE BRADLEY #5412. INSTALL PER A.D.A.

F WALL HUNG URINAL. INSTALL PER A.D.A.

G URINAL PARTITION.

H LAVATORY. INSTALL PER A.D.A. AND INSULATE PIPES.

J MIRROR. UNO PROVIDE BRADLEY #781.

K SOAP DISPENSER. UNO PROVIDE BRADLEY #6562. INSTALL PER A.D.A.

L DISPOSABLE TOILET SEAT COVER. UNO PROVIDE BRADLEY #5847. INSTALL PER A.D.A.

M PAPER TOWEL DISPENSER. UNO PROVIDE BRADLEY #2447. INSTALL PER A.D.A.

N HIGH/LOW DRINKING FOUNTAIN. INSTALL PER A.D.A.

O DRESSING ROOM BENCH

P 6" DEEP SHELF

Q HAND DRYER. INSTALL PER A.D.A.

R RECESSED PAPER TOWEL DISPENSER/DISPOSAL. UNO PROVIDE BRADLEY #2027. INSTALL PER A.D.A.

S SANITARY NAPKIN DISPOSAL. UNO PROVIDE BRADLEY #4781.

T SHOWER GRAB BAR. INSTALL PER A.D.A.

U OPERABLE 'AL' SHAPED SHOWER BENCH. INSTALL PER A.D.A.

V

W SENSORED LIQUID SOAP DISPENSER. LAVATORY MOUNTED

X BABY CHANGING STATION.

PLUMBING FIXTURE MOUNTING HEIGHTS
1/4" = 1'-0"

ARCHITECT:

COLE ARCHITECTS

COLE ARCHITECTS | 802 W. BANNOCK SUIT 208
Boise, ID 83702 | (208) 345-1800

TCA architecture • planning

TCA | 6211 Roosevelt Way NE
Seattle, WA 98115 | (206) 522-3820

STAMP:

NOT FOR CONSTRUCTION

CONSULTANT:

PROJECT INFORMATION:

City of Boise Fire Station 4

8485 W Ustick Rd, Boise, ID 83704

REVISIONS:

MARK	DATE	DESCRIPTION

PROJECT PHASE	75% CD'S
PROJECT NUMBER	15-27
PROJECT MANAGER	J. Chatfield
PROJECT ARCHITECT	J. Chatfield
DESIGN	J. Chatfield
DRAWN BY	J. Chatfield, C. Clay, R. Stewart

SHEET NAME:

INTERIOR ELEVATIONS AND DETAILS

SHEET NUMBER:

A900

02.02.16

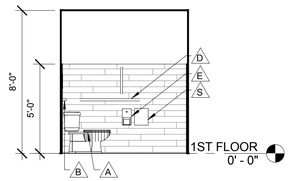

1 122 WEST
1/4" = 1'-0"

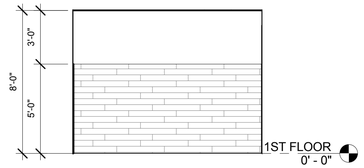

2 122 NORTH
1/4" = 1'-0"

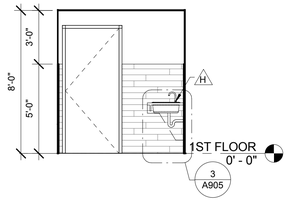

3 122 EAST
1/4" = 1'-0"

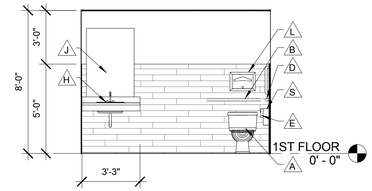

4 122 SOUTH
1/4" = 1'-0"

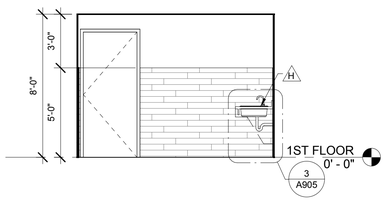

5 120 WEST
1/4" = 1'-0"

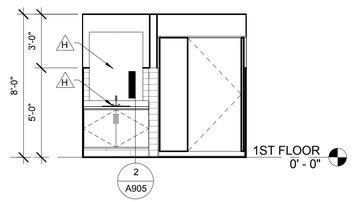

6 120 NORTH
1/4" = 1'-0"

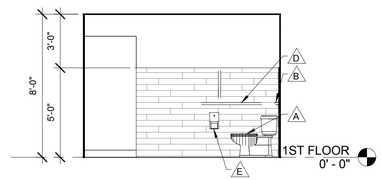

7 120 EAST
1/4" = 1'-0"

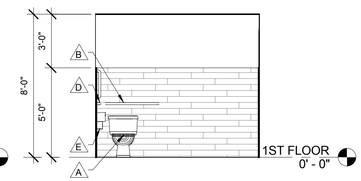

8 120 SOUTH
1/4" = 1'-0"

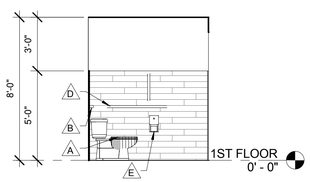

9 104 WEST
1/4" = 1'-0"

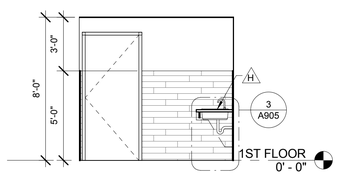

10 104 NORTH
1/4" = 1'-0"

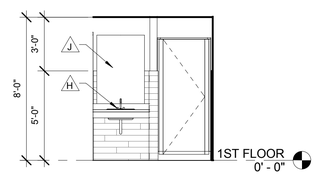

11 104 EAST
1/4" = 1'-0"

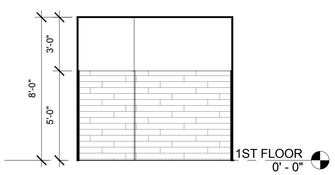

12 104 SOUTH
1/4" = 1'-0"

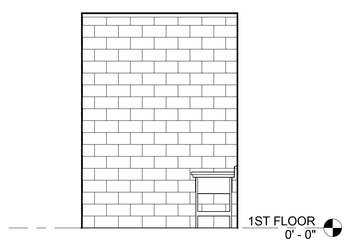

13 137 WEST
1/4" = 1'-0"

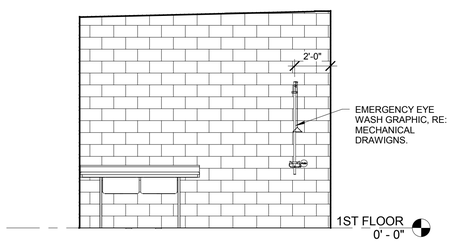

14 137 NORTH
1/4" = 1'-0"

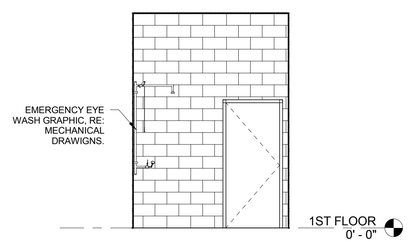

15 137 EAST
1/4" = 1'-0"

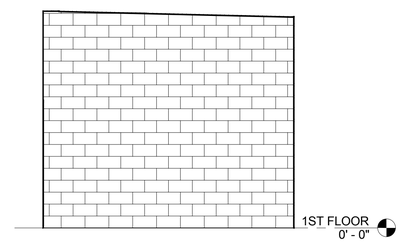

16 137 SOUTH
1/4" = 1'-0"

ARCHITECT:

COLE ARCHITECTS

COLE ARCHITECTS | 802 W. BANNOCK SUIT 208
Boise, ID 83702 | (208) 345-1800

TCA

architecture • planning

TCA | 6211 Roosevelt Way NE
Seattle, WA 98115 | (206) 522-3820

STAMP:

NOT FOR CONSTRUCTION

CONSULTANT:

PROJECT INFORMATION:

BOISE CITY OF TREES

BOISE FIRE Est. 1910 DEDICATION

City of Boise Fire Station 4

8485 W Ustick Rd, Boise, ID 83704

REVISIONS:

MARK	DATE	DESCRIPTION

PROJECT PHASE	75% CD'S
PROJECT NUMBER	15-27
PROJECT MANAGER	J. Chatfield
PROJECT ARCHITECT	J. Chatfield
DESIGN	J. Chatfield
DRAWN BY	J. Chatfield, C. Clay, R. Stewart

SHEET NAME:

INTERIOR ELEVATIONS AND DETAILS

SHEET NUMBER:

A901

02.02.16

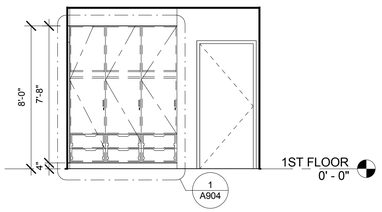

1 112 WEST
1/4" = 1'-0"

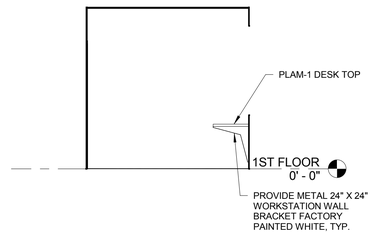

2 112 NORTH
1/4" = 1'-0"

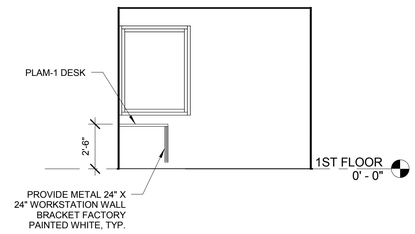

3 112 EAST
1/4" = 1'-0"

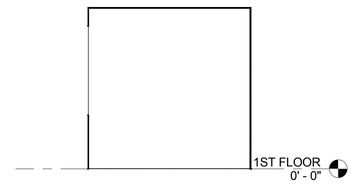

4 112 SOUTH
1/4" = 1'-0"

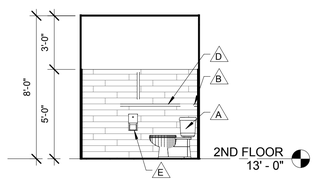

5 205 WEST
1/4" = 1'-0"

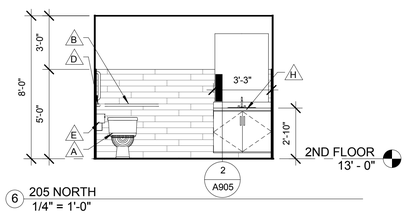

6 205 NORTH
1/4" = 1'-0"

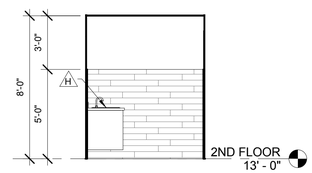

7 206 EAST
1/4" = 1'-0"

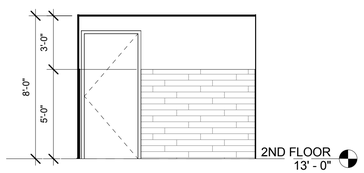

8 206 SOUTH
1/4" = 1'-0"

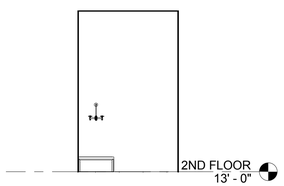

9 204 WEST
1/4" = 1'-0"

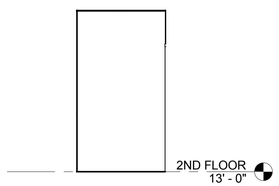

10 204 NORTH
1/4" = 1'-0"

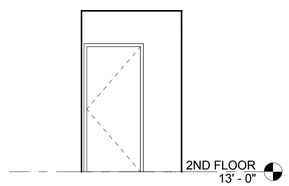

11 204 EAST
1/4" = 1'-0"

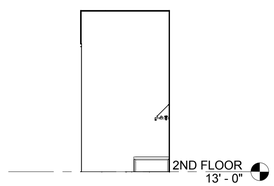

12 204 SOUTH
1/4" = 1'-0"

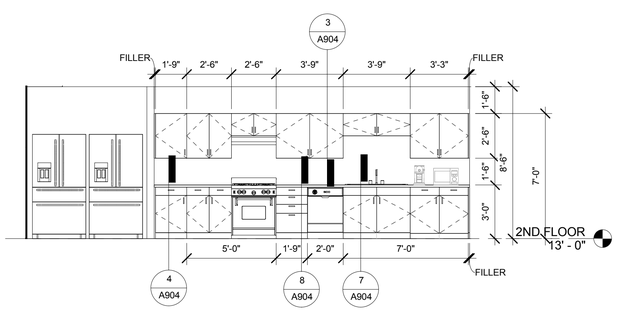

13 202 SOUTH
1/4" = 1'-0"

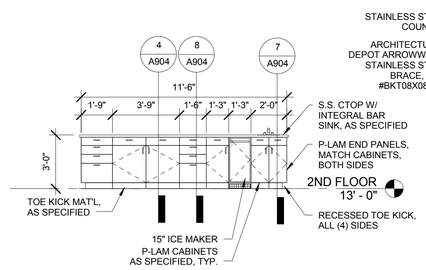

14 202 ISLAND SOUTH
1/4" = 1'-0"

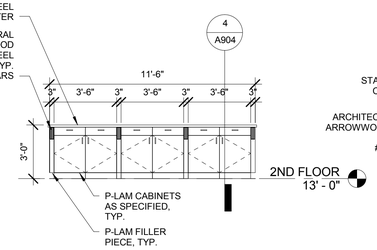

15 202 ISLAND NORTH
1/4" = 1'-0"

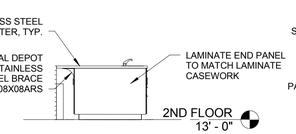

16 202 ISLAND WEST
1/4" = 1'-0"

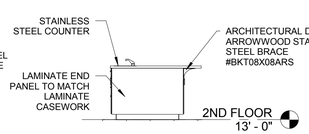

17 202 ISLAND EAST
1/4" = 1'-0"

ARCHITECT:

COLE ARCHITECTS

COLE ARCHITECTS | 802 W. BANNOCK SUIT 208
Boise, ID 83702 | (208) 345-1800

TCA
architecture • planning

TCA | 6211 Roosevelt Way NE
Seattle, WA 98115 | (206) 522-3820

STAMP:

NOT FOR CONSTRUCTION

CONSULTANT:

PROJECT INFORMATION:

City of Boise Fire Station 4

8485 W Ustick Rd, Boise, ID 83704

REVISIONS:

MARK	DATE	DESCRIPTION

PROJECT PHASE	75% CD'S
PROJECT NUMBER	15-27
PROJECT MANAGER	J. Chatfield
PROJECT ARCHITECT	J. Chatfield
DESIGN	J. Chatfield
DRAWN BY	J. Chatfield, C. Clay, R. Stewart

SHEET NAME:

INTERIOR ELEVATIONS AND DETAILS

SHEET NUMBER:

A902

02.02.16

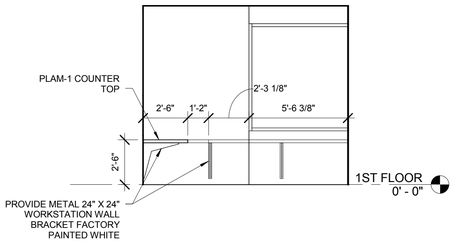

1 133 NORTH
1/4" = 1'-0"

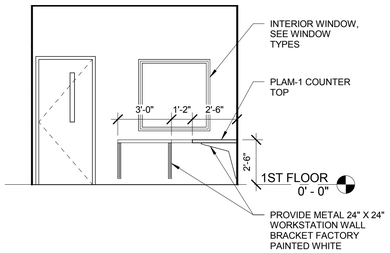

2 133 SOUTH
1/4" = 1'-0"

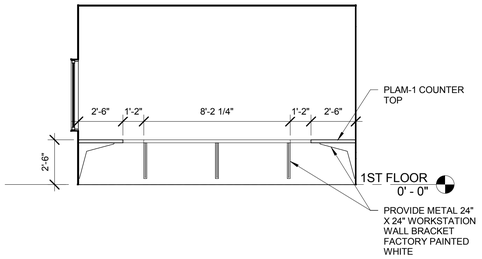

3 133 WEST
1/4" = 1'-0"

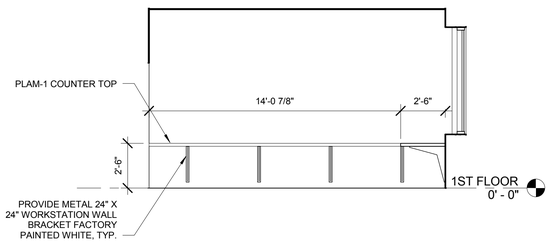

4 132 WEST
1/4" = 1'-0"

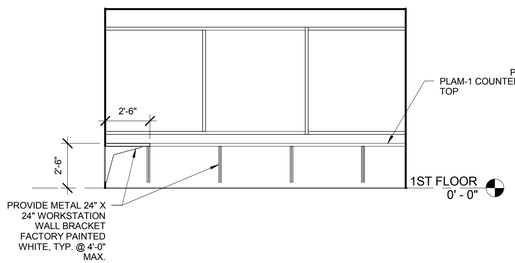

5 132 NORTH
1/4" = 1'-0"

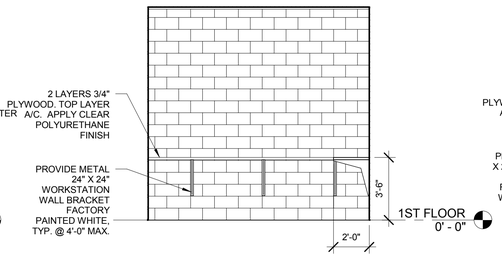

6 138 WEST
1/4" = 1'-0"

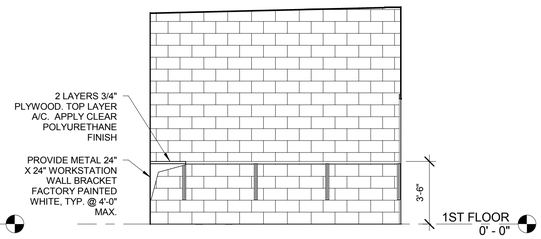

7 138 NORTH
1/4" = 1'-0"

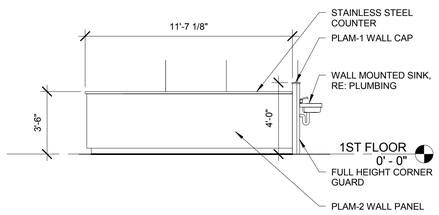

8 134 WEST
1/4" = 1'-0"

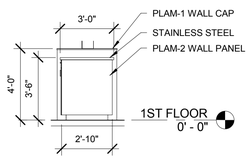

9 134 NORTH
1/4" = 1'-0"

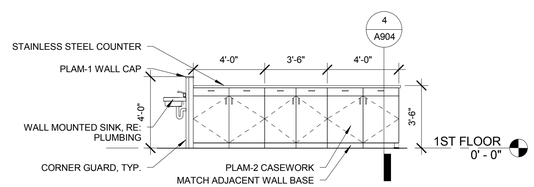

10 134 EAST
1/4" = 1'-0"

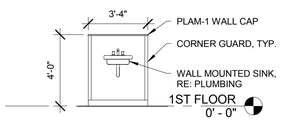

11 134 SOUTH
1/4" = 1'-0"

ARCHITECT:

COLE ARCHITECTS

COLE ARCHITECTS | 802 W. BANNOCK SUIT 208
Boise, ID 83702 | (208) 345-1800

TCA
architecture • planning
TCA | 6211 Roosevelt Way NE
Seattle, WA 98115 | (206) 522-3820

STAMP:

NOT FOR CONSTRUCTION

CONSULTANT:

PROJECT INFORMATION:

City of Boise Fire Station 4

8485 W Ustick Rd, Boise, ID 83704

REVISIONS:

MARK	DATE	DESCRIPTION

PROJECT PHASE	75% CD'S
PROJECT NUMBER	15-27
PROJECT MANAGER	J. Chatfield
PROJECT ARCHITECT	J. Chatfield
DESIGN	J. Chatfield
DRAWN BY	J. Chatfield, C. Clay, R. Stewart

SHEET NAME:

INTERIOR ELEVATIONS AND DETAILS

SHEET NUMBER:

A903

02.02.16

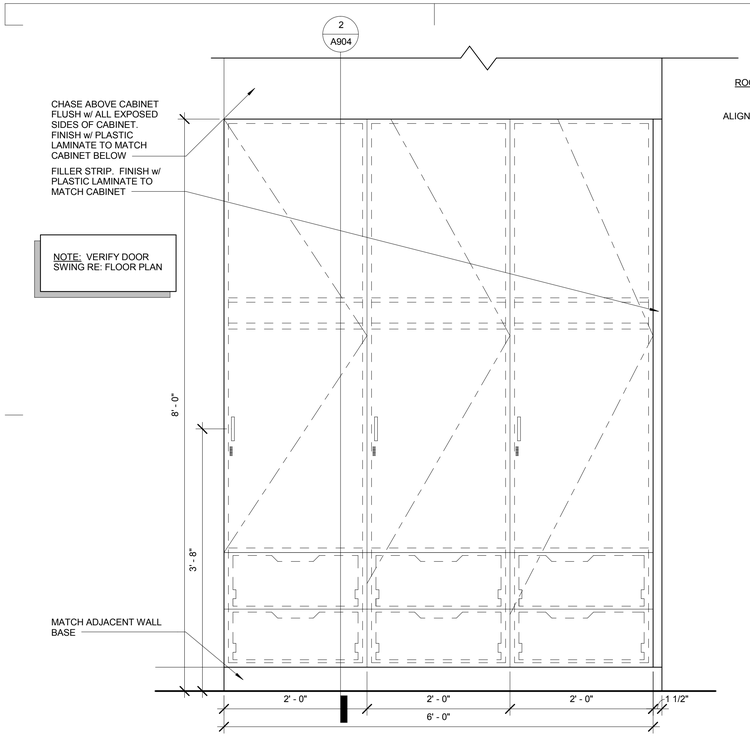

1 PASS-THRU CABINET
1" = 1'-0"

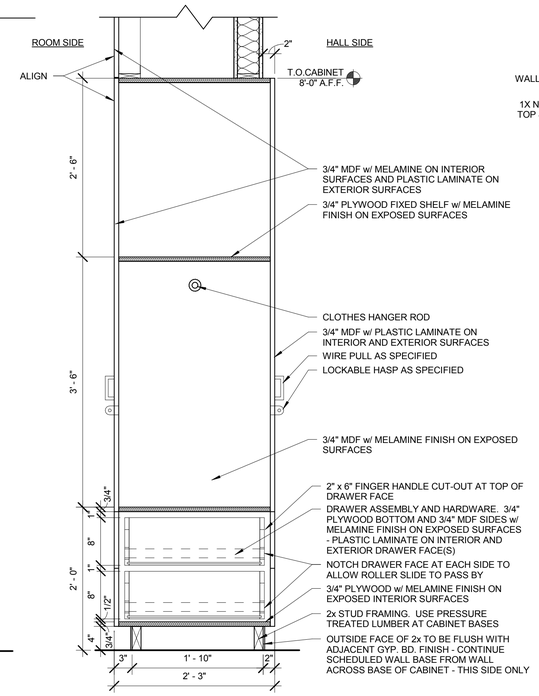

2 PASS-THRU CABINET SECTION
1" = 1'-0"

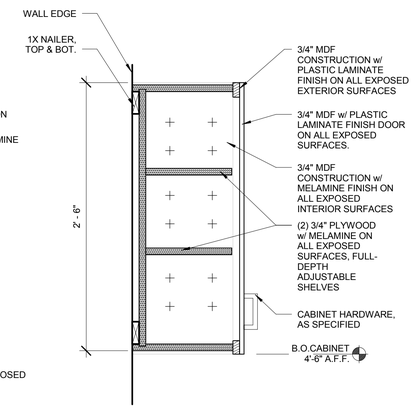

3 TYPICAL WALL CABINET SECTION
1 1/2" = 1'-0"

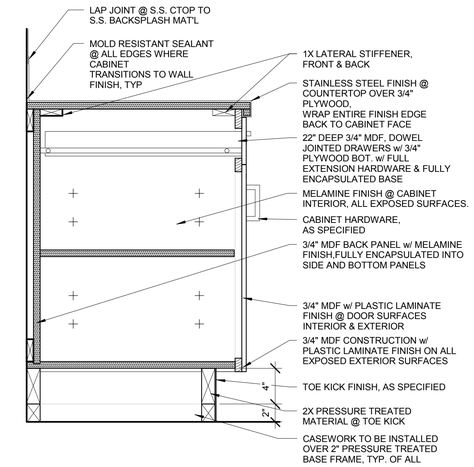

4 BASE CABINET SECTION
1 1/2" = 1'-0"

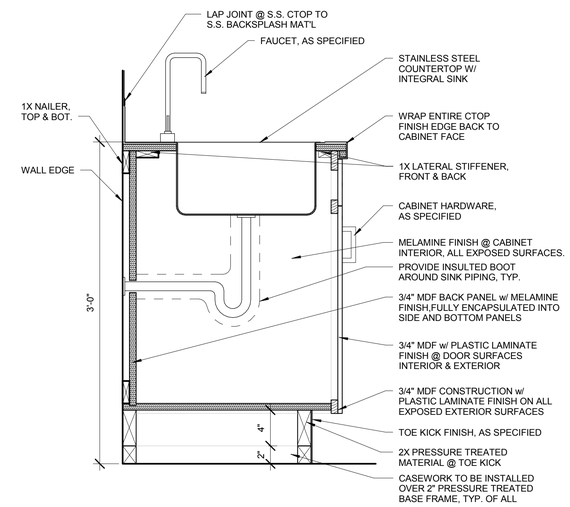

7 BASE CABINET W/ SINK SECTION
1 1/2" = 1'-0"

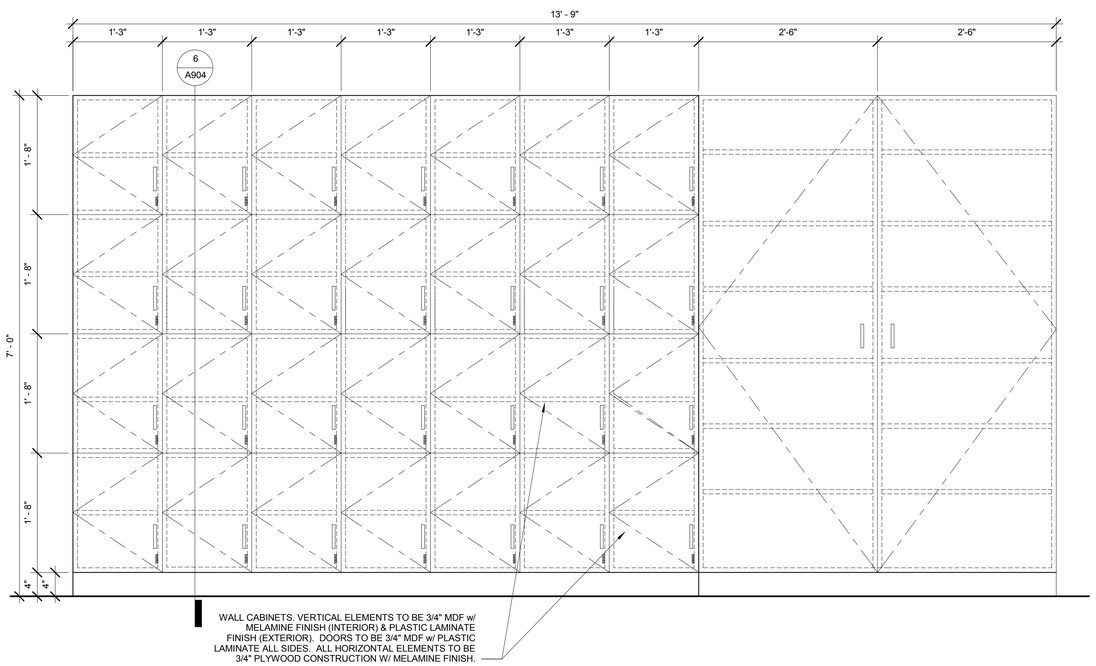

5 PANTRY CABINET ELEVATION
1" = 1'-0"

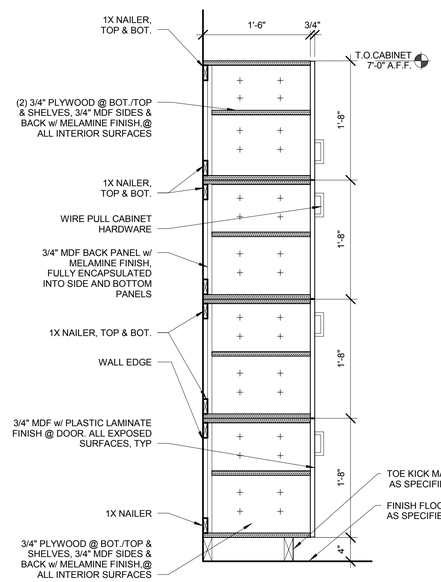

6 PANTRY CABINET SECTION
1" = 1'-0"

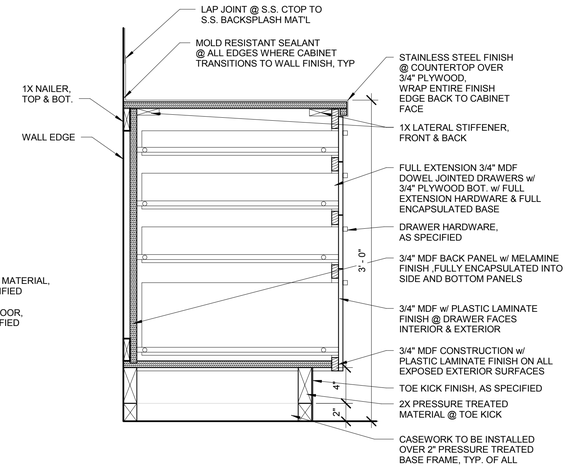

8 BASE CABINET W/ DRAWERS SECTION
1 1/2" = 1'-0"

ARCHITECT:

COLE ARCHITECTS

COLE ARCHITECTS | 802 W. BANNOCK SUIT 208
Boise, ID 83702 | (208) 345-1800

TCA architecture • planning
TCA | 6211 Roosevelt Way NE
Seattle, WA 98115 | (206) 522-3820

STAMP:

NOT FOR CONSTRUCTION

CONSULTANT:

PROJECT INFORMATION:

City of Boise Fire Station 4

8485 W Ustick Rd, Boise, ID 83704

REVISIONS:

MARK	DATE	DESCRIPTION

PROJECT PHASE	75% CD'S
PROJECT NUMBER	15-27
PROJECT MANAGER	J. Chatfield
PROJECT ARCHITECT	J. Chatfield
DESIGN	J. Chatfield
DRAWN BY	J. Chatfield, C. Clay, R. Stewart

SHEET NAME:

CASEWORK DETAILS

SHEET NUMBER:

A904

02.02.16

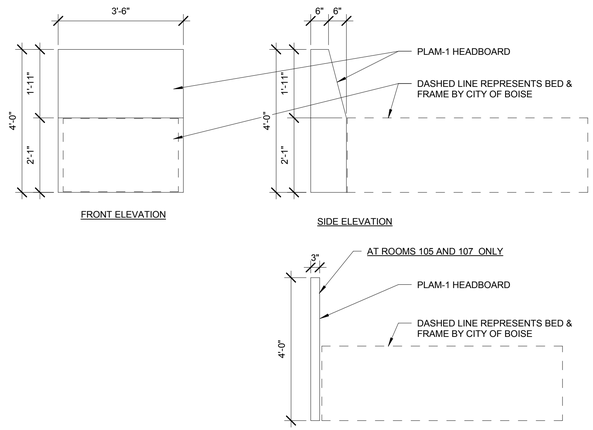

1 HEADBOARD ELEVATION
1/2" = 1'-0"

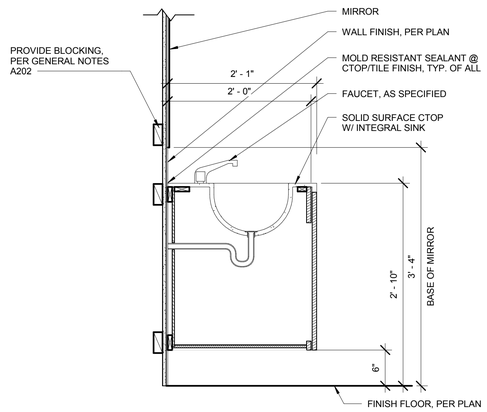

2 RR VANITY SECTION
1" = 1'-0"

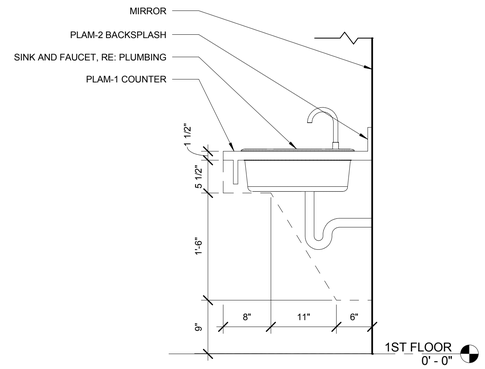

3 ADA BATHROOM COUNTER SECTION
1" = 1'-0"

ARCHITECT:

COLE ARCHITECTS

COLE ARCHITECTS | 802 W. BANNOCK SUIT 208
Boise, ID 83702 | (208) 345-1800

TCA
architecture • planning

TCA | 6211 Roosevelt Way NE
Seattle, WA 98115 | (206) 522-3820

STAMP:

NOT FOR CONSTRUCTION

CONSULTANT:

PROJECT INFORMATION:

City of Boise Fire Station 4

8485 W Ustick Rd, Boise, ID 83704

REVISIONS:

MARK	DATE	DESCRIPTION

PROJECT PHASE	75% CD'S
PROJECT NUMBER	15-27
PROJECT MANAGER	J. Chatfield
PROJECT ARCHITECT	J. Chatfield
DESIGN	J. Chatfield
DRAWN BY	J. Chatfield, C. Clay, R. Stewart

SHEET NAME:

CASEWORK DETAILS

SHEET NUMBER:

A905

02.02.16

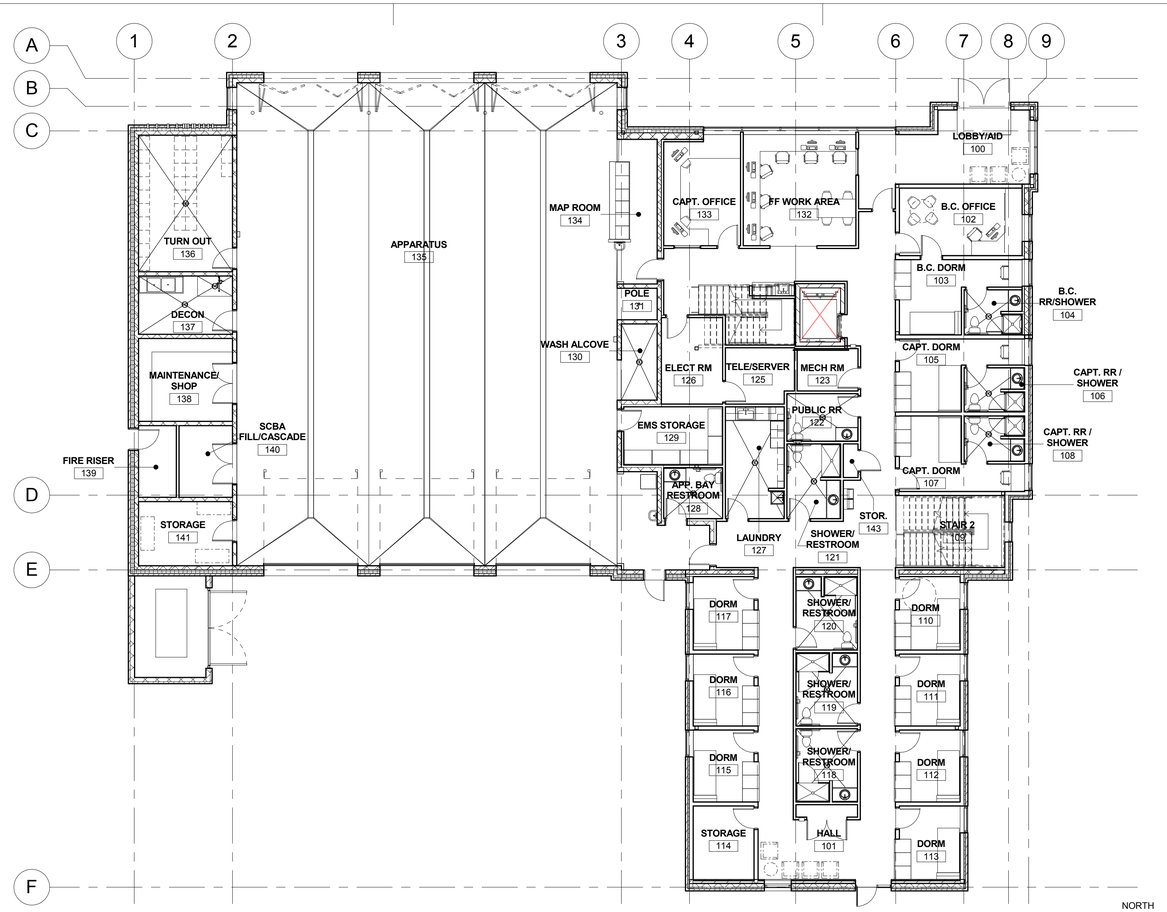

1ST FLOOR FINISH PLAN

3/32" = 1'-0"

FINISH SPECIFICATIONS:

STAIR NOSING
PRECAST CONCRETE

PT-1 (PAINT)
MANUFACTURER: BENJAMIN MOORE
COLOR: OC-131, WHITE DOWN
FINISH: SATIN

PT-2 (PAINT)
MANUFACTURER: BENJAMIN MOORE
COLOR: 2063-30 BLUEBERRY
FINISH: SATIN

PT-3 (PAINT)
MANUFACTURER: BENJAMIN MOORE
COLOR: 2112-10, MINK
FINISH: SEMIGLOSS

PLAM-1 (HORIZONTAL)
MANUFACTURER: WILSONART
COLOR: MONTANA WALNUT, #7110K-78

PLAM-2 (VERTICAL)
PROVIDE STANDARD WHITE LAMINATE. SUBMIT TO ARCHITECT FOR APPROVAL.

PLAM-3 (LAMINATE)
MANUFACTURER: WILSONART
COLOR: PEPPERDUST, #D327-60
TRIM: E.B. BRADLY CO. MOD #: FUTM-91BA & FUTM-81BA (SUPPPLY AT ALL WALL MOUNTED AREAS)

SS-1 (SOLID SURFACE)
MANUFACTURER: CAMBRIA
COLOR: SNOWDON WHITE

BS-1 (BACKSPLASH)
MANUFACTURER: CROSSVILLE
STYLE: EBB & FLOW; STICKS ND STONES - LINEAR MIXED MOSAICS
COLOR: EF07 / 1MIXMOS
GROUT: TEC, POWER LOR #994, DARK WALNUT.

VEEN-1 (VENEER)
MANUFACTU
SPECIES: P
VEENEER N SLICED
FINISH

CONC-1
POLISH CONCRETE (LIGHT SAND & PENETRATING SEALER)

CONC-2
SEALED CONCRETE

CONC-3
SMOOTH SLAB ON GRADE.

PCONC-1
POLISHED CONCRETE

T-1 (TILE)
MANUFACTURER: CROSSVILLE
NAME: LIMESTONE PORCELAIN STONE
COLOR NAME: AV233, CAMEL UPS
SIZE: 6" X 16"
INSTALLATION: BRICK PATTERN
GROUT: 1/8" JOINT; TEC, POWER GROUT, COLOR # 915 LIGHT SMOKE

T-2 (TILE)
MANUFACTURER:
NAME:
COLOR NAME:
SIZE:
INSTALLATION:
GROUT:

NOTE:
ALL FINISH MANUFACTURERS SPECIFIED ARE "BASIS OF DESIGN." PRIOR TO BIDDING, SUBMIT "OR EQUAL" PRODUCTS TO ARCHITECT FOR REVIEW/ APPROVAL.

IN PROGRESS

GENERAL NOTES FINISH PLAN:

A. REFER TO ARCHITECTURAL FLOOR, ELEVATION AND FINISH PLANS.

B. ALL TILE TO BE INSTALLED PER RECOMENDATIONS ESTABLISHED BY THE TILE COUNCIL OF NORTH AMERICA.

C. UNLESS NOTED OTHERWISE CONSTRUCT CASEWORK PER STANDARDS ESTABLISED BY THE *ARCHITECTURAL WOODWORK STANDARDS* MOST CURRENT ADDITION. CONSTRUCT PER CUSTOM FINISH DESIGN STANDARDS.

D. ALL INTERIOR FINISHES MUST BE INSTALLED BY A CERTIFIED INSTALLER/SUBCONTRACTOR PER MANUFACTURER'S INSTRUCTIONS. USE MANUFACTURER'S APPROVED ADHESIVES AND SEAM SEALERS.

E. PROVIDE CONTROL JOINTS AT TRANSITION BETWEEN WALL AND GYP BOARD SOFFIT.

F. PROVIDE STANDARD PAINT COLORS FOR THE FOLLOWING TO MATCH WALL ON WHICH THEY OCCUR: FIRE EXTINGUISHER CABINETS, CABINET UNIT HEATERS, ELECTRICAL PANELS, ACCESS PANELS LOCATED IN GYP BOARD CEILINGS.

G. PROVIDE A THIN, CLEAR, SILICONE BEAD (1/8") AT PERIMETER OF ALL DOOR FRAMES AND BORROWED GLASS LITES AFTER INSTALLATION OF SCHEDULED WALL COVERINGS. DOOR FRAMES ON PAINTED WALLS SHOULD RECEIVE THIN, PAINTABLE SILICONE BEAD (1/8") AT PERIMETER PRIOR TO PAINTING, ONLY WHERE THE FRAME DOES NOT MEET THE WALL.

H. AT GYPSUM BOARD CEILINGS, PROVIDE FACTORY FINISH SEMI-RECESSED SPRINKLER HEAD COVERS TO MATCH COLOR OF ADJACENT CEILING FINISH, AS SCHEDULED.

I. ALL FLOORING TRANSITIONS OCCUR UNDER THE CENTER OF THE DOOR UNLESS OTHERWISE NOTED.

J. PROVIDE OWNER'S STOCK IN THE FLOWING QUANITIES:
*CERAMIC TILE/ PORCELAIN TILE: 1 CARTON OF EACH TYPE AND COLOR OF TILE SPECIFIED
*ACOUSTICAL CEILING TILE: 200 SQUARE FEET OF EACH TYPE OF ACOUSTICAL UNIT SPECIFIED, PLUS 40 LINEAL FEET OF EXPOSED SUSPENSION SYSTEM COMPONENTS.
*RESILIENT & SHEET VINYL FLOORING: 200 SQUARE FEET OF EACH TYPE AND COLOR
*SHEET VINYL, 40 LINEAL FEET OF EACH TYPE AND COLOR OF RESILIENT BASE
*CARPET:
*PAINT: 1 GALLON OF EACH COLOR.
*WALLCOVERING: 25 LINEAL FEET OF EACH COLOR AND PATTERN OF WALLCOVERING SPECIFIED

K. PROVIDE SHOWER CURTAIN AT ADA SHOWERS. SHOWER DOORS AT ALL OTHER SHOWERS.

L. WINDOW SILLS TO RECEIVE SOLID SURFACING WHITE LAMINATE UNLESS OTHERWISE NOTED.

KEY NOTES:

1. XXX

ROOM FINISH SCHEDULE 1ST FLOOR

NO.	NAME	FLOOR FINISH	FLOOR BASE	WALLS NORTH MATERIAL	WALLS NORTH FINISH	WALLS EAST MATERIAL	WALLS EAST FINISH	WALLS SOUTH MATERIAL	WALLS SOUTH FINISH	WALLS WEST MATERIAL	WALLS WEST FINISH	CEILING MATERIAL	CEILING FINISH	NOTES
100	LOBBY/AID	CONC-2	WB-1	GYP BD	PT-1	GYP BD	PT-1	GYP BD	PT-1	GYP BD	PT-1	GYP BD / ACT-1	PT-1	
101	HALL	CONC-2	WB-1	GYP BD	PT-1	GYP BD	PT-1	GYP BD	PT-1	GYP BD	PT-1	ACT-1	-	
102	B.C. OFFICE	WTWTWT	WB-1	GYP BD	PT-1	GYP BD	PT-1	GYP BD	PT-1	GYP BD	PT-1	ACT-1	-	
103	B.C. DORM	CONC-2	WB-1	GYP BD	PT-1	GYP BD	PT-1	GYP BD	PT-1	GYP BD	PT-1	ACT-1	-	
104	B.C. RR/SHOWER	CONC-2	WB-2	T-1 / GYP BD	PT-2	T-1 / GYP BD	PT-2	T-1 / GYP BD	PT-2	T-1 / GYP BD	PT-2	GYP BD	PT-1	1,2
105	CAPT. DORM	CONC-2	WB-1	GYP BD	PT-1	GYP BD	PT-1	GYP BD	PT-1	GYP BD	PT-1	ACT-1	-	
106	CAPT. RR / SHOWER	CONC-2	WB-2	T-1 / GYP BD	PT-2	T-1 / GYP BD	PT-2	T-1 / GYP BD	PT-2	T-1 / GYP BD	PT-2	GYP BD	PT-1	1,2
107	CAPT. DORM	CONC-2	WB-1	GYP BD	PT-1	GYP BD	PT-1	GYP BD	PT-1	GYP BD	PT-1	ACT-1	-	
108	CAPT. RR / SHOWER	CONC-2	WB-2	T-1 / GYP BD	PT-2	T-1 / GYP BD	PT-2	T-1 / GYP BD	PT-2	T-1 / GYP BD	PT-2	GYP BD	PT-1	1,2
109	STAIR 2	CONC-2	WB-1	GYP BD	PT-1	GYP BD	PT-1	GYP BD	PT-1	-	-	GYP BD / ACT-1	PT-1	
110	DORM	CONC-2	WB-1	GYP BD	PT-1	GYP BD	PT-1	GYP BD	PT-1	GYP BD	PT-1	ACT-1	-	
111	DORM	CONC-2	WB-1	GYP BD	PT-1	GYP BD	PT-1	GYP BD	PT-1	GYP BD	PT-1	ACT-1	-	
112	DORM	CONC-2	WB-1	GYP BD	PT-1	GYP BD	PT-1	GYP BD	PT-1	GYP BD	PT-1	ACT-1	-	
113	DORM	CONC-2	WB-1	GYP BD	PT-1	GYP BD	PT-1	GYP BD	PT-1	GYP BD	PT-1	ACT-1	-	
114	STORAGE	CONC-2	WB-1	GYP BD	PT-1	GYP BD	PT-1	GYP BD	PT-1	GYP BD	PT-1	ACT-1	-	
115	DORM	CONC-2	WB-1	GYP BD	PT-1	GYP BD	PT-1	GYP BD	PT-1	GYP BD	PT-1	ACT-1	-	
116	DORM	CONC-2	WB-1	GYP BD	PT-1	GYP BD	PT-1	GYP BD	PT-1	GYP BD	PT-1	ACT-1	-	
117	DORM	CONC-2	WB-1	GYP BD	PT-1	GYP BD	PT-1	GYP BD	PT-1	GYP BD	PT-1	ACT-1	-	
118	SHOWER/ RESTROOM	CONC-2	WB-2	T-1 / GYP BD	PT-2	T-1 / GYP BD	PT-2	T-1 / GYP BD	PT-2	T-1 / GYP BD	PT-2	GYP BD	PT-1	1,2
119	SHOWER/ RESTROOM	CONC-2	WB-2	T-1 / GYP BD	PT-2	T-1 / GYP BD	PT-2	T-1 / GYP BD	PT-2	T-1 / GYP BD	PT-2	GYP BD	PT-1	1,2
120	SHOWER/ RESTROOM	CONC-2	WB-2	T-1 / GYP BD	PT-2	T-1 / GYP BD	PT-2	T-1 / GYP BD	PT-2	T-1 / GYP BD	PT-2	GYP BD	PT-1	1,2
121	SHOWER/ RESTROOM	CONC-2	WB-2	T-1 / GYP BD	PT-2	T-1 / GYP BD	PT-2	T-1 / GYP BD	PT-2	T-1 / GYP BD	PT-2	GYP BD	PT-1	1,2
122	PUBLIC RR	CONC-2	WB-2	T-1 / GYP BD	PT-2	T-1 / GYP BD	PT-2	T-1 / GYP BD	PT-2	T-1 / GYP BD	PT-2	GYP BD	PT-1	1,2
123	MECH RM	CONC-1	WB-1	GYP BD	PT-1	GYP BD	PT-1	GYP BD	PT-1	GYP BD	PT-1	-	-	
124	COFFEE	CONC-2	WB-1	-	-	GYP BD	PT-1	GYP BD	PT-1	GYP BD	PT-1	ACT-1	-	3
125	TELE/SERVER	CONC-1	WB-1	GYP BD	PT-1	GYP BD	PT-1	GYP BD	PT-1	GYP BD	PT-1	-	-	
126	ELECT RM	CONC-1	WB-1	GYP BD	PT-1	GYP BD	PT-1	GYP BD	PT-1	GYP BD	PT-1	-	-	
127	LAUNDRY	CONC-2	WB-1	GYP BD	PT-1	GYP BD	PT-1	GYP BD	PT-1	GYP BD	PT-1	-	-	
128	APP. BAY RESTROOM	CONC-1	-	T-1 / GYP BD	PT-2	T-1 / GYP BD	PT-2	T-1 / GYP BD	PT-2	T-1 / GYP BD	PT-2	ACT-1	-	1,2,4
129	EMS STORAGE	CONC-1	WB-1	GYP BD	PT-2	GYP BD	PT-2	GYP BD	PT-2	GYP BD	PT-2	-	-	
130	WASH ALCOVE	CONC-1	-	CMU	PT-2	CMU	PT-2	CMU	PT-2	CMU	PT-2	GYP BD	PT-1	4,5
131	POLE	CONC-1	-	CMU	PT-2	CMU	PT-2	CMU	PT-2	CMU	PT-2	-	-	4
132	FF WORK AREA	CONC-2	WB-1	GYP BD	PT-1	GYP BD	PT-1	GYP BD	PT-1	GYP BD	PT-1	ACT-1	-	
133	CAPT. OFFICE	CONC-2	WB-1	GYP BD	PT-1	GYP BD	PT-1	GYP BD	PT-1	GYP BD	PT-1	ACT-1	-	
134	MAP ROOM	CONC-1	-	GYP BD	PT-2	CMU	PT-2	CMU	PT-2	-	-	-	PT-3	4
135	APPARATUS	CONC-1	-	CMU	PT-2	CMU	PT-2	CMU	PT-2	CMU	PT-2	-	PT-3	4,5
136	TURN OUT	CONC-1	-	CMU	PT-2	CMU	PT-2	GYP BD	PT-2	CMU	PT-2	-	PT-3	4
137	DECON	CONC-1	-	GYP BD	PT-2	CMU	PT-2	GYP BD	PT-2	CMU	PT-2	-	PT-3	4,5,6
138	MAINTENANCE/ SHOP	CONC-1	-	GYP BD	PT-2	CMU	PT-2	GYP BD	PT-2	CMU	PT-2	-	PT-3	4
139	FIRE RISER	CONC-1	WB-1	GYP BD	PT-1	GYP BD	PT-1	GYP BD	PT-1	CMU	PT-1	-	-	
140	SCBA FILL/CASCADE	CONC-1	-	GYP BD	PT-2	CMU	PT-2	GYP BD	PT-2	GYP BD	PT-2	-	PT-3	4
141	STORAGE	CONC-1	-	GYP BD	PT-2	CMU	PT-2	CMU	PT-2	CMU	PT-2	-	PT-3	4
142	STORAGE	CONC-2	WB-1	GYP BD	PT-1	GYP BD	PT-1	GYP BD	PT-1	GYP BD	PT-1	ACT-1	-	
143	STOR.	CONC-1	WB-1	GYP BD	PT-1	GYP BD	PT-1	GYP BD	PT-1	GYP BD	PT-1	-		

FINISH SCHEDULE NOTES

1. WALL TILE TO 5'-0" ABOVE FF
2. BATHROOM BACKSPASH
3. KITCHEN BACKSPLASH
4. CAULKED CMU BASE AT EPOXY PAINT ONLY
5. METAL GRATING
6. PROVIDE FRP TO 8'-0" BEHIND SINK BACKSPLASH AND SHOWER

ARCHITECT:

COLE ARCHITECTS

COLE ARCHITECTS | 802 W. BANNOCK SUIT 208
Boise, ID 83702 | (208) 345-1800

TCA
architecture • planning
TCA | 6211 Roosevelt Way NE
Seattle, WA 98115 | (206) 522-3820

STAMP:

NOT FOR CONSTRUCTION

CONSULTANT:

PROJECT INFORMATION:

City of Boise Fire Station 4

8485 W Ustick Rd, Boise, ID 83704

REVISIONS:

MARK	DATE	DESCRIPTION

PROJECT PHASE	75% CD'S
PROJECT NUMBER	15-27
PROJECT MANAGER	J. Chatfield
PROJECT ARCHITECT	J. Chatfield
DESIGN	J. Chatfield
DRAWN BY	J. Chatfield, C. Clay, R. Stewart

SHEET NAME:

1ST FLOOR FINISH PLAN

SHEET NUMBER:

ID100

02.02.16

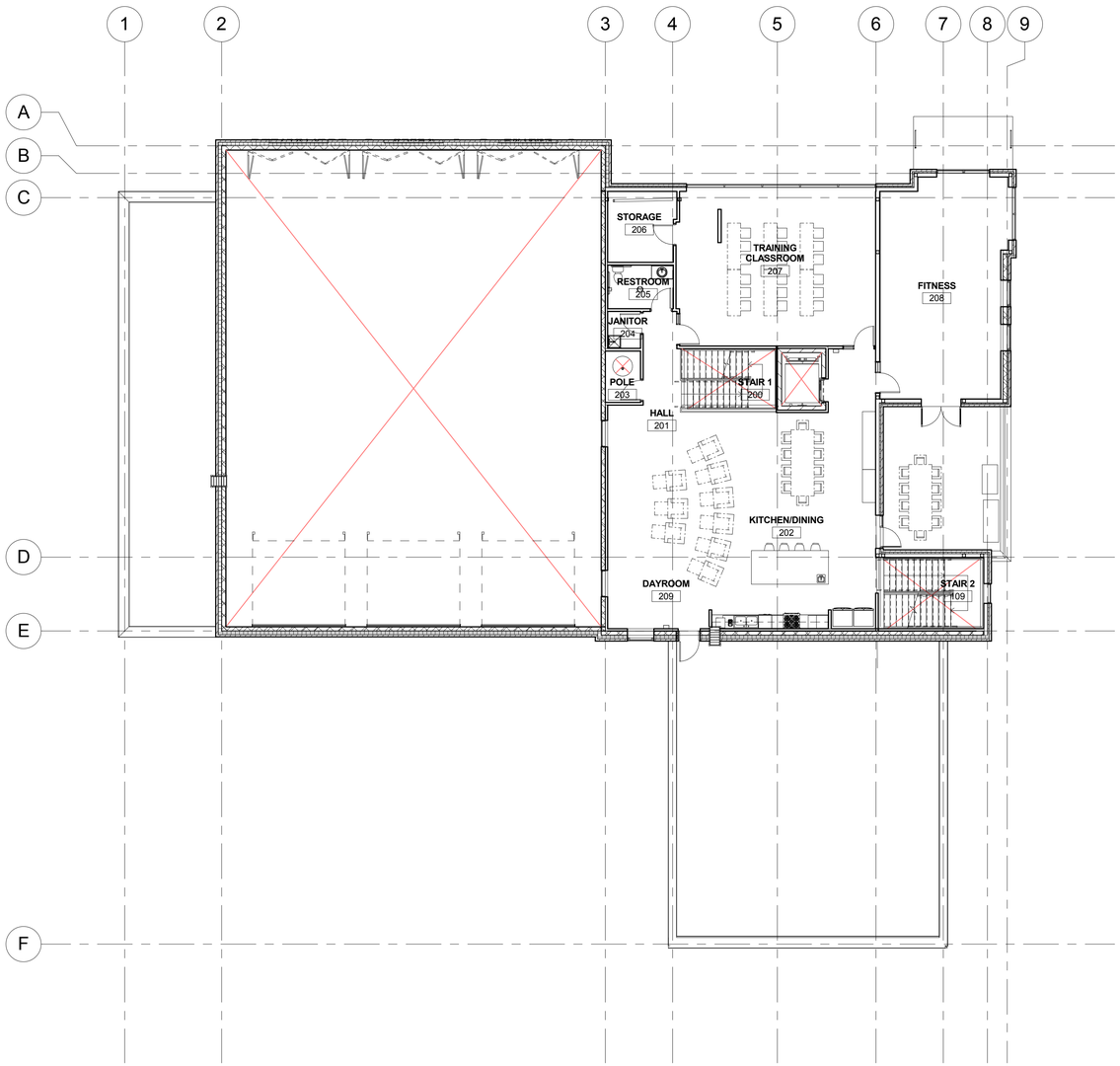

2ND FLOOR FINISH PLAN

3/32" = 1'-0"

NORTH

FINISH SPECIFICATIONS:

STAIR NOSING
PRECAST CONCRETE

PT-1 (PAINT)
MANUFACTURER: BENJAMIN MOORE
COLOR: OC-131, WHITE DOWN
FINISH: SATIN

PT-2 (PAINT)
MANUFACTURER: BENJAMIN MOORE
COLOR: 2063-30 BLUEBERRY
FINISH: SATIN

PT-3 (PAINT)
MANUFACTURER: BENJAMIN MOORE
COLOR: 2112-10, MINK
FINISH: SEMIGLOSS

PLAM-1 (HORIZONTAL)
MANUFACTURER: WILSONART
COLOR: MONTANA WALNUT, #7110K-78

PLAM-2 (VERTICAL)
PROVIDE STANDARD WHITE LAMINATE. SUBMIT TO ARCHITECT FOR APPROVAL.

PLAM-3 (LAMINATE)
MANUFACTURER: WILSONART
COLOR: PEPPERDUST, #D327-60
TRIM: E.B. BRADLY CO. MOD #: FUTM-91BA & FUTM-81BA (SUPPPLY AT ALL WALL MOUNTED AREAS)

SS-1 (SOLID SURFACE)
MANUFACTURER: CAMBRIA
COLOR: SNOWDON WHITE

BS-1 (BACKSPLASH)
MANUFACTURER: CROSSVILLE
STYLE: EBB & FLOW; STICKS ND STONES - LINEAR MIXED MOSAICS
COLOR: EF07 / 1MIXMOS
GROUT: TEC, POWER LOR #994, DARK WALNUT.

VEEN-1 (VENEER)
MANUFACTU
SPECIES: P
VENEER N SLICED
FINISH

CONC-1
POLISH D CONCRETE (LIGHT SAND & PENETRATING SEALER)

CONC-2
SEALED CONCRETE

CONC-3
SMOOTH SLAB ON GRADE.

PCONC-1
POLISHED CONCRETE

T-1 (TILE)
MANUFACTURER: CROSSVILLE
NAME: LIMESTONE PORCELAIN STONE
COLOR NAME: AV233, CAMEL UPS
SIZE: 6" X 16"
INSTALLATION: BRICK PATTERN
GROUT: 1/8" JOINT; TEC, POWER GROUT, COLOR # 915 LIGHT SMOKE

T-2 (TILE)
MANUFACTURER:
NAME:
COLOR NAME:
SIZE:
INSTALLATION:
GROUT:

NOTE:
ALL FINISH MANUFACTURERS SPECIFIED ARE "BASIS OF DESIGN." PRIOR TO BIDDING, SUBMIT "OR EQUAL" PRODUCTS TO ARCHITECT FOR REVIEW/ APPROVAL.

IN PROGRESS

GENERAL NOTES FINISH PLAN:

A. REFER TO ARCHITECTURAL FLOOR, ELEVATION AND FINISH PLANS.

B. ALL TILE TO BE INSTALLED PER RECOMENDATIONS ESTABLISHED BY THE TILE COUNCIL OF NORTH AMERICA.

C. UNLESS NOTED OTHERWISE CONSTRUCT CASEWORK PER STANDARDS ESTABLISED BY THE *ARCHITECTURAL WOODWORK STANDARDS* MOST CURRENT ADDITION. CONSTRUCT PER CUSTOM FINISH DESIGN STANDARDS.

D. ALL INTERIOR FINISHES MUST BE INSTALLED BY A CERTIFIED INSTALLER/SUBCONTRACTOR PER MANUFACTURER'S INSTRUCTIONS. USE MANUFACTURER'S APPROVED ADHESIVES AND SEAM SEALERS.

E. PROVIDE CONTROL JOINTS AT TRANSITION BETWEEN WALL AND GYP BOARD SOFFIT.

F. PROVIDE STANDARD PAINT COLORS FOR THE FOLLOWING TO MATCH WALL ON WHICH THEY OCCUR: FIRE EXTINGUISHER CABINETS, CABINET UNIT HEATERS, ELECTRICAL PANELS, ACCESS PANELS LOCATED IN GYP BOARD CEILINGS.

G. PROVIDE A THIN, CLEAR, SILICONE BEAD (1/8") AT PERIMETER OF ALL DOOR FRAMES AND BORROWED GLASS LITES AFTER INSTALLATION OF SCHEDULED WALL COVERINGS. DOOR FRAMES ON PAINTED WALLS SHOULD RECEIVE THIN, PAINTABLE SILICONE BEAD (1/8") AT PERIMETER PRIOR TO PAINTING, ONLY WHERE THE FRAME DOES NOT MEET THE WALL.

H. AT GYPSUM BOARD CEILINGS, PROVIDE FACTORY FINISH SEMI-RECESSED SPRINKLER HEAD COVERS TO MATCH COLOR OF ADJACENT CEILING FINISH, AS SCHEDULED.

I. ALL FLOORING TRANSITIONS OCCUR UNDER THE CENTER OF THE DOOR UNLESS OTHERWISE NOTED.

J. PROVIDE OWNER'S STOCK IN THE FLOWING QUANITIES:
*CERAMIC TILE/ PORCELAIN TILE: 1 CARTON OF EACH TYPE AND COLOR OF TILE SPECIFIED
*ACOUSTICAL CEILING TILE: 200 SQUARE FEET OF EACH TYPE OF ACOUSTICAL UNIT SPECIFIED, PLUS 40 LINEAL FEET OF EXPOSED SUSPENSION SYSTEM COMPONENTS.
*RESILIENT & SHEET VINYL FLOORING: 200 SQUARE FEET OF EACH TYPE AND COLOR
*SHEET VINYL, 40 LINEAL FEET OF EACH TYPE AND COLOR OF RESILIENT BASE
*CARPET:
*PAINT: 1 GALLON OF EACH COLOR.
*WALLCOVERING: 25 LINEAL FEET OF EACH COLOR AND PATTERN OF WALLCOVERING SPECIFIED

K. PROVIDE SHOWER CURTAIN AT ADA SHOWERS. SHOWER DOORS AT ALL OTHER SHOWERS.

L. WINDOW SILLS TO RECEIVE SOLID SURFACING WHITE LAMINATE UNLESS OTHERWISE NOTED.

KEY NOTES:

1. XXX

ROOM FINISH SCHEDULE 2ND FLOOR

NO.	NAME	FLOOR		WALLS								CEILING		NOTES
				NORTH		EAST		SOUTH		WEST				
		FINISH	BASE	MATERIAL	FINISH	MATERIAL	FINISH	MATERIAL	FINISH	MATERIAL	FINISH	MATERIAL	FINISH	
200	STAIR 1	-	WB-1	GYP BD	PT-1	CMU	PT-1	-	-	-	-	GYP BD / ACT-1	PT-1	
201	HALL	CONC-2	WB-1	GYP BD	PT-1	GYP BD	PT-1	-	-	GYP BD	PT-1	GYP BD	PT-1	
202	KITCHEN/DINING	CONC-2	WB-1	CMU	PT-1	GYP BD	PT-1	GYP BD	PT-1	GYP BD	PT-1	GYP BD / ACT-1	PT-1	3
203	POLE	CONC-2	WB-1	GYP BD	PT-1	GYP BD	PT-1	GYP BD	PT-1	CMU	PT-1	-	-	
204	JANITOR	CONC-2	WB-1	GYP BD	PT-1	GYP BD	PT-1	GYP BD	PT-1	GYP BD	PT-1	GYP BD	PT-1	
205	RESTROOM	CONC-2	WB-2	T-1 / GYP BD	PT-2	T-1 / GYP BD	PT-2	T-1 / GYP BD	PT-2	T-1 / GYP BD	PT-2	GYP BD	PT-1	2
206	STORAGE	CONC-2	WB-1	GYP BD	PT-1	GYP BD	PT-1	GYP BD	PT-1	GYP BD	PT-1	-	-	
207	TRAINING CLASSROOM	CONC-2	WB-1	GYP BD	PT-1	GYP BD	PT-1	GYP BD	PT-1	GYP BD	PT-1	GYP BD / ACT-1	PT-1	
208	FITNESS	RAF	WB-1	GYP BD	PT-1	GYP BD	PT-1	GYP BD	PT-1	GYP BD	PT-1	GYP BD / ACT-1	PT-1	
209	DAYROOM	CONC-2	WB-1	GYP BD	PT-1	GYP BD	PT-1	GYP BD	PT-1	GYP BD	PT-1	GYP BD / ACT-1	PT-1	
210	PATIO													

FINISH SCHEDULE NOTES

1. WALL TILE TO 5'-0" ABOVE FF
2. BATHROOM BACKSPASH
3. KITCHEN BACKSPLASH
4. CAULKED CMU BASE AT EPOXY PAINT ONLY
5. METAL GRATING
6. PROVIDE FRP TO 8'-0" BEHIND SINK BACKSPLASH AND SHOWER

ARCHITECT:

COLE ARCHITECTS

COLE ARCHITECTS | 802 W. BANNOCK SUIT 208
Boise, ID 83702 | (208) 345-1800

TCA architecture • planning

TCA | 6211 Roosevelt Way NE
Seattle, WA 98115 | (206) 522-3820

STAMP:

NOT FOR CONSTRUCTION

CONSULTANT:

PROJECT INFORMATION:

City of Boise Fire Station 4

8485 W Ustick Rd, Boise, ID 83704

REVISIONS:

MARK	DATE	DESCRIPTION

PROJECT PHASE	75% CD'S
PROJECT NUMBER	15-27
PROJECT MANAGER	J. Chatfield
PROJECT ARCHITECT	J. Chatfield
DESIGN	J. Chatfield
DRAWN BY	J. Chatfield, C. Clay, R. Stewart

SHEET NAME:

2ND FLOOR FINISH PLAN

SHEET NUMBER:

ID101

02.02.16

ABBREVIATIONS

AB	ANCHOR BOLT
ACI	AMERICAN CONCRETE INSTITUTE
ADDL	ADDITIONAL
ADJ	ADJACENT
AESS	ARCHITECTURAL EXPOSED STRUCTURAL STEEL
AGGR	AGGREGATE
AISC	AMERICAN INSTITUTE OF STEEL CONSTRUCTION
ALT	ALTERNATE
ALUM	ALUMINUM
ANCH	ANCHOR
ANSI	AMERICAN NATIONAL STANDARDS INSTITUTE
APPVD	APPROVED
APPROX	APPROXIMATE
ARCH	ARCHITECTURAL; ARCHITECT
ASTM	AMERICAN SOCIETY FOR TESTING AND MATERIALS
AWPA	AMERICAN WOOD PRESERVERS ASSOCIATION
AWS	AMERICAN WELDING SOCIETY
AITC	AMERICAN INSTITUTE OF TIMBER CONSTRUCTION
ASTM	AMERICAN SOCIETY FOR TESTING MATERIALS
&	AND
@	AT
BLDG	BUILDING
BLK	BLOCK
BLKG	BLOCKING
BM	BEAM
BNDRY	BOUNDARY
BOT OR B	BOTTOM
BOD	BOTTOM OF DECK
BRC	BRACE
BRG	BEARING
BT	BENT
BTWN	BETWEEN
C	AMERICAN STD CHANNEL SHAPE
CANT	CANTILEVER
CAM OR C	CAMBER
CC	CENTER TO CENTER
CG	CENTER OF GRAVITY
CIP	CAST-IN-PLACE
CJ	CONSTRUCTION JOINT; CONTROL JOINT
CL	CENTER LINE
CLR	CLEARANCE; CLEAR
CMU	CONCRETE MASONRY UNIT
COL	COLUMN
COMP	COMPRESSION
CONC	CONCRETE
CONN	CONNECTION; CONNECT
CONSTR	CONSTRUCTION
CONT	CONTINUE; CONTINUOUS
CONTR	CONTRACTOR
CJP	COMPLETE JOINT PENETRATION WELD
CTR	CENTER
CTSK	COUNTERSINK; COUNTERSUNK
CU FT	CUBIC FOOT
DBL	DOUBLE
DEPT	DEPARTMENT
DET	DETAIL
DIA OR Ø	DIAMETER
DIAG	DIAGONAL
DIAPH	DIAPHRAGM
DIM	DIMENSION
DN	DOWN
DO	DITTO (REPEAT)
DWG	DRAWING
DWL	DOWEL
EA	EACH
EF	EACH FACE
EJ	EXPANSION JOINT
EL	ELEVATION
ELEC	ELECTRICAL
ELEV	ELEVATOR
EMBED	EMBEDMENT
ENGR	ENGINEER
EQ	EQUAL OR EQUIVALENT
EQUIP	EQUIPMENT
ES	EACH SIDE
ETC	ET CETERA
EW	EACH WAY

EXIST or (E)	EXISTING
EXT	EXTERIOR
FDN	FOUNDATION
FF	FAR FACE
FF	FINISHED FLOOR
FIN	FINISH
FJ	FLOOR JOIST
FL	FLOOR LINE
FLG	FLANGE
FLR	FLOOR
FOC	FACE OF CONCRETE
FOM	FACE OF MASONARY
FOS	FACE OF STUD
FOW	FACE OF WALL
FP	FULL PENETRATION; FIRE PROOFING
FRMG	FRAMING
FS	FULL SIZE; FAR SIDE
FT	FOOT; FEET
FTG	FOOTING
GA	GAUGE
GALV	GALVANIZED
GLB	GLUED LAMINATED BEAM
GR	GRADE
GRND	GROUND
H or HORIZ	HORIZONTAL
HDR	HEADER
HGR	HANGER
HGT	HEIGHT
HP	HIGH POINT
HS	HIGH STRENGTH
HSS	HOLLOW STRUCTURAL STEEL SHAPE
HT	HEIGHT
ID	INSIDE DIAMETER
IF	INSIDE FACE
IN	INCH
INCL	INCLUDE
INFO	INFORMATION
INSP	INSPECTION
INT	INTERIOR
JST	JOIST
JT	JOINT
K	KIPS
KSI	KIPS PER SQUARE INCH
L	ANGLE SHAPE
LB(S) OR #	POUND(S)
LF	LINEAL FOOT
LIN	LINEAL; LINEAR
LLBB	LONG LEGS BACK-TO-BACK
LLH	LONG LEG HORIZONTAL
LLV	LONG LEG VERTICAL
LP	LOW POINT
LT WT	LIGHTWEIGHT
LVL	LEVEL
MAS	MASONRY
MATL	MATERIAL
MAX	MAXIMUM
MB	MACHINE BOLT
MC	MISCELLANEOUS CHANNEL SHAPE
MECH	MECHANICAL
MFR	MANUFACTURER
MIN	MINIMUM; MINUTE
MISC	MISCELLANEOUS
(N)	NEW
N	NORTH
NF	NEAR FACE
NIC	NOT IN CONTRACT
NORM	NORMAL
NO or #	NUMBER
NS	NEAR SIDE
NTS	NOT TO SCALE

OC	ON CENTER
OD	OUTSIDE DIAMETER
OF	OUTSIDE FACE
OH	OPPOSITE HAND
OPNG	OPENING
OPP	OPPOSITE
ORIG	ORIGINAL
PARA OR //	PARALLEL
PERP	PERPENDICULAR
PIPE	STANDARD PIPE SHAPE
PIPE-X	EXTRA STRONG PIPE SHAPE
PIPE-XX	DBL EXTRA STRONG PIPE SHAPE
PL	PLATE
PLF	POUNDS PER LINEAL FOOT
PW	PLATE WASHER
PJP	PARTIAL JOINT PENETRATION WELD
PREFAB	PREFABRICATED
PSF	POUNDS PER SQUARE FOOT
PSI	POUNDS PER SQUARE INCH
PVC	POLYVINYL CHLORIDE
PVMT	PAVEMENT
#	POUND; NUMBER
REF	REFERENCE
REINF	REINFORCE; REINFORCING
REQD	REQUIRED
RF	ROOF
Ø	ROUND; DIAMETER
SCHED	SCHEDULE
SECT	SECTION
SHT	SHEET
SHTG	SHEATHING
SIM	SIMILAR
SLBB	SHORT LEGS BACK-TO-BACK
SOG	SLAB ON GRADE
SPECS	SPECIFICATIONS
SQ	SQUARE
ST, MT	STRUCT TEE SHAPE
STAGG	STAGGER
STD	STANDARD
STGR	STAGGER
STIFF	STIFFENERS
STIRR	STIRRUP
STL	STEEL
STRUCT	STRUCTURAL
SYM	SYMMETRICAL
T & B	TOP AND BOTTOM
T & G	TONGUE & GROOVE
TO	TOP OF
TOC	TOP OF CURB; TOP OF CONCRETE
TOF	TOP OF FOOTING
TEMP	TEMPERATURE; TEMPORARY
THRU	THROUGH
THK	THICKNESS/THICK
THR	THREADED
TOP or T	TOP
TOS	TOP OF STEEL/TOP OF SLAB
TOW	TOP OF WALL
TYP	TYPICAL
UNO	UNLESS NOTED OTHERWISE
UT	ULTRA-SONIC TEST
VERT	VERTICAL
W	W SHAPE
W/	WITH
W/O	WITHOUT
WP	WORK POINT; WATERPROOF
WT	WEIGHT; STRUCTURAL TEE SHAPE
WWF	WELDED WIRE FABRIC

SYMBOLS

	SECTION REFERENCE BUBBLE
	DETAIL REFERENCE BUBBLE WITH ARROW
	DETAIL REFERENCE BUBBLE
	FULL HEIGHT SECTION INDICATOR
	BUILDING SECTION INDICATOR
	ELEVATION OF WALL OR FRAME
N	NORTH ARROW
	SLOPE
	EARTH LAYER
	STEPPED SURFACE; FLOOR DEPRESSION
	SLOPED SURFACE
	INDICATES SAND OR GROUT
	INDICATES GRAVEL
	TOP OF SLAB ELEVATION
—X—X—X—X—X—	WELDED WIRE FABRIC (WWF LAYER)
X	FOOTING TYPE
	INDICATES MASONRY WALLS
	STEEL TUBE COLUMN
	STEEL PIPE COLUMN
	WIDE FLANGE STEEL COLUMN
	MEMBER SPLICE
(+3")	TOP OF STEEL + ELEVATION
[X]	NUMBER OF EVENLY SPACED SHEAR STUDS
<3/4>	BEAM CAMBER AT MID-SPAN
	STEEL IN CROSS SECTION
	DIRECTION OF SPAN
	BEAM LATERAL BRACE
	STEPPED FOOTING

SHEET INDEX

Sheet Number	Sheet Name
S000	ABBREVIATIONS, SYMBOLS AND SHEET INDEX
S001	GENERAL STRUCTURAL NOTES
S002	GENERAL STRUCTURAL NOTES
S003	GENERAL STRUCTURAL NOTES
S201	FOUNDATION PLAN
S202	LEVEL 2 FRAMING PLAN
S203	ROOF FRAMING PLAN
S300	EXTERIOR ELEVATIONS
S301	EXTERIOR ELEVATIONS
S350	WALL/FRAME ELEVATIONS
S400	BUILDING SECTIONS
S401	BUILDING SECTIONS
S450	WALL SECTIONS
S451	WALL SECTIONS
S452	WALL SECTIONS
S501	TYPICAL CONCRETE DETAILS
S502	TYPICAL CONCRETE DETAILS
S503	TYPICAL CONCRETE DETAILS
S601	TYPICAL MANSONRY DETAILS
S602	TYPICAL MANSONRY DETAILS
S650	MASONRY DETAILS
S701	TYPICAL STEEL DETAILS
S702	TYPICAL STEEL DETAILS
S703	TYPICAL STEEL DETAILS
S704	TYPICAL STEEL DETAILS
S705	TYPICAL STEEL DECK DETAILS
S706	TYPICAL STEEL DECK DETAILS
S707	TYPICAL STEEL DECK DETAILS
S750	STEEL DETAILS
S800	STAIR PLANS AND SECTIONS
S810	STAIR DETAILS
S900	EXTERIOR WALL TYPICAL DETAILS
S901	EXTERIOR WALL TYPICAL DETAILS
S902	EXTERIOR WALL TYPICAL DETAILS
S903	EXTERIOR WALL TYPICAL DETAILS
S904	EXTERIOR WALL TYPICAL DETAILS
S905	TYPICAL EXTERIOR WALL DETAILS

ARCHITECT:

COLE ARCHITECTS

COLE ARCHITECTS | 802 W. BANNOCK SUIT 208
Boise, ID 83702 | (208) 345-1800

TCA

architecture • planning

TCA | 6211 Roosevelt Way NE
Seattle, WA 98115 | (206) 522-3820

STAMP:

NOT FOR CONSTRUCTION

CONSULTANT:

kpff

412 E. Parkcenter Blvd, Suite 204
Boise, ID 83706
O: 208.336.6985
www.kpff.com

PROJECT INFORMATION:

BOISE CITY OF TREES

BOISE FIRE Est. 1870 DEDICATION

City of Boise Fire Station 4

8485 W. Ustick Rd, Boise, ID 83704

REVISIONS:

MARK	DATE	DESCRIPTION

PROJECT PHASE	75% CD
PROJECT NUMBER	114747.01
PROJECT MANAGER	J. Chatfield
PROJECT ARCHITECT	J. Chatfield
DESIGN	J. Chatfield
DRAWN BY	Author

SHEET NAME:

ABBREVIATIONS, SYMBOLS AND SHEET INDEX

SHEET NUMBER:

S000

11.09.15

FOUNDATION

1. GEOTECHNICAL INFORMATION AND FOUNDATION DESIGN IS BASED ON THE FOLLOWING GEOTECHNICAL REPORTS AND SUPPLEMENTS/ADDENDUMS. COPIES OF THE REPORTS AND SUPPLEMENTAL LETTERS SHALL BE AVAILABLE AT THE JOBSITE AT ALL TIMES.

REPORT/ADDENDUM TITLE	PREPARED BY	DATE
GEOTECHNICAL ENGINEERING EVALUATION	STRATA	7/27/15

2. SPREAD OR CONTINUOUS FOOTINGS:

ANTICIPATED BEARING MATERIAL	ALLOWABLE BEARING CAPACITY
PROOF-ROLLED SANDY SILT, CLAYEY SAND, OR GRANULAR SOIL IMPROVEMENTS AS PRESENTED IN GEOTEC REPORT	2,000 PSF

3. PROVIDE DE-WATERING OF EXCAVATIONS FROM SURFACE WATER, GROUND WATER AND/OR SEEPAGE AS NECESSARY.
4. EXCAVATION FOR FOOTINGS SHALL BE APPROVED BY THE INSPECTOR OR GEOTECHNICAL ENGINEER PRIOR TO PLACING CONCRETE AND REINFORCING.
5. DO NOT BACKFILL BEHIND FREE STANDING RETAINING WALLS UNTIL CONCRETE WALL HAS ATTAINED FULL DESIGN STRENGTH.
6. DO NOT BACKFILL BEHIND BASEMENT WALLS UNTIL THE SUPPORTING FLOOR SLAB HAS ATTAINED FULL DESIGN STRENGTH.
7. REMOVE ABANDONED FOOTINGS, UTILITIES, ETC. NEW FOOTINGS SHALL BEAR ON UNDISTURBED SOIL OR COMPACTED BACKFILL.

OPEN WEB STEEL JOISTS:

1. DESIGN, DETAILING, FABRICATION, AND ERECTION OF OPEN-WEB STEEL JOISTS SHALL BE THE SOLE RESPONSIBILITY OF THE CONTRACTOR. DESIGN SHALL COMPLY WITH THE CURRENT BUILDING CODE AND WITH LOADS SHOWN ON THE GENERAL NOTES AND ON SHEET S1.02 & S1.03.
2. SHOP DRAWINGS (STAMPED AND SIGNED BY A LICENSED STRUCTURAL OR CIVIL ENGINEER IN THE STATE OF IDAHO) AND CALCULATIONS FOR OPEN-WEB STEEL JOISTS SHALL BE SUBMITTED FOR APPROVAL TO THE ARCHITECT OR STRUCTURAL ENGINEER PRIOR TO FABRICATION.
3. NON-COMPOSITE LONGSPAN STEEL JOISTS, NOTED AS TYPE "LH", SHALL COMPLY WITH SJI-LH/DLH-2010 STANDARD SPECIFICATION FOR LONGSPAN STEEL JOISTS, 2010. DO NOT CAMBER NON-COMPOSITE STEEL JOISTS.
   NEED TO INCLUDE TL DEFLECTION CRITERIA
4. MAXIMUM BEARING SEAT DEPTH FOR ALL OPEN WEB STEEL JOISTS IS 5".

SEE S202 ADDITION

DESIGN INFORMATION:

1. FLOOR LIVE LOADS:

   FITNESS ROOM — 100 PSF (NOT REDUCIBLE)

   KITCHEN AND DAY ROOM AREA — 50 PSF (REDUCIBLE)

2. ROOF LIVE LOADS

   ROOF — 20 PSF (REDUCIBLE)

3. ROOF SNOW LOAD DATA:

   GROUND SNOW LOAD , P_g = 20 PSF

   FLAT ROOF SNOW LOAD, P_f = 14 PSF

   MINIMUM SNOW LOAD, P_g = 25 PSF

   Q: ASSUMING 30 PSF DEAD LOAD ON JOISTS WITH UNSPECIFIED CATALOG SERIES NUMBERS.

   SNOW LOAD EXPOSURE FACTOR, C_e =0.9

   THERMAL FACTOR, C_t = 1.0

   SNOW LOAD IMPORTANCE FACTOR, I_s = 1.10

4. WIND DESIGN DATA (2012 IBC SECTION 1603.1.4) :

   WIND LOADS ARE IN ACCORDANCE WITH SECTION 1609 OF THE CODE.

   WIND SPEED, V_{ULT} = 120 MPH (3-SECOND GUST)

   EXPOSURE C

   RISK CATEGORY IV

COMPONENTS & CLADDING WIND PRESSURES (PSF)				
LOCATION		COMPONENT TRIBUTARY AREA (SQ FT)		
		10	100	500
ROOF	ZONE 1			
	ZONE 2			
	ZONE 3			
WALLS	ZONE 4			
	ZONE 5			
PARAPETS	ZONE 4			
	ZONE 5			

5. EARTHQUAKE DESIGN DATA (2012 IBC SECTION 1603.1.5):

SITE AND OCCUPANCY PARAMETERS	
SEISMIC IMPORTANCE FACTOR	I = 1.5
RISK CATEGORY	IV
MAPPED SPECTRAL RESPONSE ACCELERATIONS:	S_S = 0.304
	S_1 = 0.105
SITE CLASS	D
SPECTRAL RESPONSE COEFFICIENTS:	S_{DS} = 0.316
	S_{D1} = 0.166
SEISMIC DESIGN CATEGORY	D

BUILDING PARAMETERS	
BASIC SEISMIC FORCE RESISTING SYSTEM	ORDINARY CONCENTRICALLY BRACE FRAME/SPECIAL REINFORCED MASONRY SHEARWALL
DESIGN BASE SHEAR	
SEISMIC RESPONSE COEFFICIENTS	Cs = 0.15
RESPONSE MODIFICATION FACTOR	R = 3.25
SYSTEM OVERSTRENGTH FACTOR	Ωo = 2.5
DEFLECTION AMPLIFICATION FACTOR	Cd = 3.25
ANALYSIS PROCEDURE USED	EQUIVALENT LATERAL FORCE PROCEDURE (ASCE 7-10 SECTION 12.8)
BASE ELEVATION	

GENERAL

1. THE CONTRACTOR SHALL VERIFY ALL DIMENSIONS PRIOR TO STARTING CONSTRUCTION. THE ARCHITECT SHALL BE NOTIFIED OF ANY DISCREPANCIES OR INCONSISTENCIES.
2. ALL DRAWINGS AND SPECIFICATIONS ARE CONSIDERED TO BE A PART OF THE CONTRACT DOCUMENTS. THE CONTRACTOR SHALL BE RESPONSIBLE FOR THE REVIEW AND COORDINATION OF ALL DRAWINGS AND SPECIFICATIONS PRIOR TO THE START OF CONSTRUCTION. ANY DISCREPANCIES THAT OCCUR SHALL BE BROUGHT TO THE ATTENTION OF THE ARCHITECT PRIOR TO START OF CONSTRUCTION SO THAT A CLARIFICATION CAN BE ISSUED. ANY WORK PERFORMED IN CONFLICT WITH THE CONTRACT DOCUMENTS OR ANY CODE REQUIREMENTS SHALL BE CORRECTED BY THE CONTRACTOR AT THEIR OWN EXPENSE AND AT NO EXPENSE TO THE OWNER OR ARCHITECT.
3. NOTES AND DETAILS ON DRAWINGS SHALL TAKE PRECEDENCE OVER GENERAL NOTES AND TYPICAL DETAILS. WHERE NO DETAILS ARE GIVEN, CONSTRUCTION SHALL BE AS SHOWN FOR SIMILAR WORK.
4. ALL WORK SHALL CONFORM TO THE MINIMUM STANDARDS OF THE FOLLOWING CODES:

   2012 INTERNATIONAL BUILDING CODE, PART 2, VOLUME 2 OF 2, AND LATEST REVISIONS REFERRED TO HERE AS "THE CODE", AND ANY OTHER REGULATING AGENCIES WHICH HAVE AUTHORITY OVER ANY PORTION OF THE WORK, INCLUDING THE CITY OF MERIDIAN DEPARTMENT OF BUILDING SERVICES, THE STATE OF IDAHO DIVISION OF BUILDING SAFETY, AND THOSE CODES & STANDARDS LISTED IN THESE NOTES AND SPECIFICATIONS.
5. SEE ARCHITECTURAL DRAWINGS FOR THE FOLLOWING:
   A. SIZE AND LOCATION OF ALL DOOR AND WINDOW OPENINGS, EXCEPT AS NOTED
   B. SIZE AND LOCATION OF ALL INTERIOR AND EXTERIOR NON-BEARING PARTITIONS UNLESS NOTED AND/OR DETAILED ON THE STRUCTURAL DRAWINGS
   C. SIZE AND LOCATION OF ALL CONCRETE CURBS, EQUIPMENT PADS, PITS, FLOOR DRAINS, SLOPES, DEPRESSED AREAS, CHANGE IN LEVEL, CHAMFERS, GROOVES, INSERTS, ETC
   D. SIZE AND LOCATION OF ALL FLOOR AND ROOF OPENINGS EXCEPT AS SHOWN
   E. FLOOR AND ROOF FINISHES
   F. MISCELLANEOUS DRAINAGE AND WATERPROOFING
   G. ALL FIREPROOFING REQUIREMENTS INCLUDING FIREPROOFING OF STRUCTURAL STEEL
   H. DIMENSIONS NOT SHOWN ON STRUCTURAL DRAWINGS
6. SEE MECHANICAL, PLUMBING AND ELECTRICAL DRAWINGS FOR THE FOLLOWING:
   A. PIPE RUNS, SLEEVES, HANGERS, TRENCHES, WALL AND SLAB OPENINGS, ETC., EXCEPT AS SHOWN OR NOTED.
   B. ELECTRICAL CONDUIT RUNS, BOXES, OUTLETS IN WALLS AND SLABS.
   C. CONCRETE INSERTS FOR ELECTRICAL, MECHANICAL OR PLUMBING FIXTURES.
   D. SIZE AND LOCATION OF MACHINE OR EQUIPMENT BASES, ANCHOR BOLTS FOR MOTOR MOUNTS.
7. THE CONTRACT STRUCTURAL DRAWINGS AND SPECIFICATIONS REPRESENT THE FINISHED STRUCTURE. THEY DO NOT INDICATE THE METHOD OF CONSTRUCTION. THE CONTRACTOR SHALL PROVIDE ALL MEASURES NECESSARY TO PROTECT THE STRUCTURE DURING CONSTRUCTION. SUCH MEASURES SHALL INCLUDE, BUT NOT BE LIMITED TO, BRACING, SHORING FOR LOADS DUE TO CONSTRUCTION EQUIPMENT ETC. THE CONTRACTOR IS RESPONSIBLE FOR PROVISION OF TEMPORARY SHORING AND OTHER CONSTRUCTION AIDS, INCLUDING ALL ENGINEERING OF SUCH SYSTEMS, FOR TEMPORARY SUPPORT OF NEW AND/OR EXISTING STRUCTURAL ELEMENTS AS REQUIRED FOR ERECTION AND OTHER CONTRACTOR'S MEANS AND METHODS OF CONSTRUCTION (UNO). OBSERVATION VISITS TO THE SITE BY THE STRUCTURAL ENGINEER SHALL NOT INCLUDE INSPECTION OF THE ABOVE ITEMS.
8. THE CONTRACT STRUCTURAL DRAWINGS SHOW THE BUILDING IN ITS FINAL INTENDED POSITION. CONTRACTOR SHALL MAKE PROVISIONS IN THE CONSTRUCTION SEQUENCING OF THE BUILDING TO TAKE INTO ACCOUNTS SHRINKAGE, CREEP, SHORTENING, ETC.
9. FOR PIPES AND CONDUITS PENETRATING THROUGH OR EMBEDDED IN CONCRETE/CMU OR SLEEVED THROUGH CONCRETE/CMU, REFER TO THE CONCRETE/CMU GENERAL NOTES.
10. ASTM SPECIFICATIONS ON THE DRAWINGS SHALL BE THE VERSION REFERENCED IN CHAPTER 35 OF THE CODE OR AS REFERENCED IN THE APPLICABLE DESIGN STANDARD.
11. CONTRACTOR SHALL INVESTIGATE SITE DURING CLEARING AND EARTHWORK OPERATIONS FOR FILLED EXCAVATIONS OR BURIED STRUCTURES, SUCH AS CESSPOOLS, CISTERNS, FOUNDATIONS, ETC. IF ANY SUCH STRUCTURES ARE FOUND, THE STRUCTURAL ENGINEER AND GEOTECHNICAL ENGINEER SHALL BE NOTIFIED IMMEDIATELY.
12. CONSTRUCTION MATERIAL SHALL BE SPREAD OUT IF PLACED ON FRAMED ROOF OR FLOOR. LOAD SHALL NOT EXCEED THE DESIGN LIVE LOAD PER SQUARE FOOT. THE CONTRACTOR TO DESIGN AND PROVIDE ADEQUATE SHORING AND/OR BRACING WHERE STRUCTURE HAS NOT ATTAINED DESIGN STRENGTH.
13. FOR PROJECTS REQUIRING SHORING FOR SOIL EXCAVATION:
    a. THE CONTRACTOR SHALL VERIFY THE EXTENT AND LOCATIONS OF SITE UTILITIES PRIOR TO EXCAVATION OR SHORING. SINCE THE SURVEY WAS BASED PRIMARILY ON PUBLIC RECORDS, THERE MAY BE DISCREPANCIES BETWEEN THE LOCATION INDICATED ON THE SITE SURVEY AND ACTUAL VERIFIED LOCATIONS. IF THE ACTUAL FIELD VERIFIED LOCATION OF UTILITIES COULD RESULT IN A CONFLICT WITH THE SHORING, THE E0R FOR SHORING SHALL BE NOTIFIED IMMEDIATELY.
    b. HEAVY EQUIPMENT, CRANES AND MATERIAL STOCKPILES SHALL NOT BE LOCATED ON OR ADJACENT TO SHORING UNLESS REVIEWED BY THE EOR FOR SHORIG, AND APPROVED BY OSHPD.
    c. CONTRACTOR SHALL COORDINATE SHORING WITH DRAWINGS OF RECORD TO INSURE PROVISIONS FOR POCKETS, BLOCKOUTS, OFFSETS, STEPPED FOOTINGS AND ANY OTHER ITEMS AFFECTED BY THE SHORING
    d. STOCK PILING OR STORAGE OF MATERIAL ON OR NEAR SHORING BULKHEAD IS NOT PERMITTED.
14. WHERE NOT SHOWN ON THE DRAWINGS, CONTRACTOR TO PROVIDE FOR DESIGN AND INSTALLATION OF ALL CRIBBING, SHEATHING AND SHORING REQUIRED AND SHALL BE SOLELY RESPONSIBLE FOR ALL EXCAVATION PROCEDURES INCLUDING LAGGING, SHORING, AND PROTECTION OF ADJACENT PROPERTY, STRUCTURES, STREETS, AND UTILITIES IN ACCORDANCE WITH ALL NATIONAL, STATE AND LOCAL SAFETY ORDINANCES. BRACED SHORING DESIGN EMPLOYING TIE-BACK ANCHORS, WHEN USED, SHALL BE SUBMITTED TO SEOR FOR REVIEW AND APPROVAL.
16. SLABS ON GRADE SHOWN ON THESE DRAWINGS ARE NOT DESIGNED AS STRUCTURAL DIAPHRAGMS.
17. EDGE OF SLAB DIMENSIONS TO BE COORDINATED AND VERIFIED BY THE GENERAL CONTRACTOR PRIOR TO FABRICATION.

ARCHITECT:

COLE ARCHITECTS

COLE ARCHITECTS | 802 W. BANNOCK SUIT 208
Boise, ID 83702 | (208) 345-1800

TCA architecture • planning

TCA | 6211 Roosevelt Way NE
Seattle, WA 98115 | (206) 522-3820

STAMP:

NOT FOR CONSTRUCTION

CONSULTANT:

kpff
412 E. Parkcenter Blvd, Suite 204
Boise, ID 83706
O: 208.336.6985
www.kpff.com

PROJECT INFORMATION:

City of Boise Fire Station 4

8485 W. Ustick Rd, Boise, ID 83704

REVISIONS:

MARK	DATE	DESCRIPTION

PROJECT PHASE	75% CD
PROJECT NUMBER	114747.01
PROJECT MANAGER	J. Chatfield
PROJECT ARCHITECT	J. Chatfield
DESIGN	J. Chatfield
DRAWN BY	Author

SHEET NAME:

GENERAL STRUCTURAL NOTES

SHEET NUMBER:

S001

11.09.15

MASONRY

1. MASONRY CONSTRUCTION AND MATERIALS SHALL CONFORM TO THE REQUIREMENTS OF "SPECIFICATION FOR MASONRY STRUCTURES" (ACI 530.1-11) PUBLISHED BY THE MASONRY SOCIETY, AMERICAN CONCRETE INSTITUTE, AND THE AMERICAN SOCIETY OF CIVIL ENGINEERS, AND WITH CHAPTER 21 OF THE CODE. CONCRETE BLOCKS SHALL BE HOLLOW LOAD-BEARING CONCRETE MASONRY UNITS CONFORMING TO ASTM C90, GRADE N. MEDIUM WEIGHT UNITS.

2. CONCRETE MASONRY UNITS SHALL MEET THE FOLLOWING REQUIREMENTS:

WALL DESIGN STRENGTH	NET AREA COMPRESSIVE STRENGTH OF CONCRETE MASONRY UNITS
f'm = 1,500 PSI	1,900 PSI MIN

3. TYPICAL PORTLAND CEMENT SHALL CONFORM TO ASTM C150. CEMENT SHALL BE AS SPECIFIED FOR CONCRETE.

4. REINFORCING BARS - SEE NOTES UNDER "REINFORCING STEEL" FOR REQUIREMENTS.

5. MORTAR SHALL CONFORM TO ASTM C270 AND SECTION 2103A.9 OF THE CODE AND HAVE THE FOLLOWING PROPERTIES AND STRENGTHS:

WALL DESIGN STRENGTH	MORTAR TYPE	MORTAR 28 DAY COMPRESSIVE STRENGTH
f'm = 1,500 PSI	S	1,800 PSI MIN

SEE NOTES UNDER "TEST AND INSPECTION REQUIREMENTS" FOR TESTING REQUIREMENTS.

6. GROUT SHALL COMPLY WITH SECTION 2103.13 OF THE CODE AND ASTM C476. GROUT SHALL MEET THE FOLLOWING REQUIREMENTS:

WALL DESIGN STRENGTH	GROUT 28 DAY COMPRESSIVE STRENGTH
f'm = 1,500 PSI	2,000 PSI MIN

SEE NOTES UNDER "TEST AND INSPECTION REQUIREMENTS" FOR TESTING REQUIREMENTS.

7. MORTAR AND GROUT COMPONENTS SHALL CONFORM WITH THE FOLLOWING:

SAND	ASTM C144
LIME	ASTM C207
PORTLAND CEMENT	ASTM C150, TYPE I OR II, LOW ALKALI, < 6 MONTHS OLD
PEA GRAVEL	ASTM C30

8. ADMIXTURES SHALL NOT BE USED IN GROUT EXCEPT BY SPECIFIC CONSENT OF SEOR. SEE NOTES UNDER "TEST AND INSPECTION REQUIREMENTS" FOR TESTING REQUIREMENTS.

9. PROVIDE A MINIMUM OF 1/2" CLEAR BETWEEN MAIN REINFORCING AND MASONRY UNITS.

10. DESIGN f'm = 1500 PSI FOR CMU CONSTRUCTION, TYPICAL. PRISM TESTING SHALL BE PERFORMED AS PER THE REQUIREMENTS OF PROJECT SPECIFICATIONS AND THE CODE, SECTION 2105.2.2.2. SEE ALSO NOTES UNDER "TEST AND INSPECTION REQUIREMENTS" FOR REQUIREMENTS.

11. USE RUNNING BOND PATTERN UNO BY ARCHITECT. USE OPEN ENDED UNITS FOR STACKED BOND PATTERN.

12. USE OF HIGH-LIFT GROUT CONSTRUCTION IS SUBJECT TO APPROVAL BY SEOR. HIGH-LIFT GROUTING SHALL CONFORM TO SECTION 2104.5.1.2.1.2 OF THE CODE. CONTRACTOR SHALL SUBMIT A HIGH LIFT GROUTING PROCEDURE DEOMONSTRATING CONFORMANCE TO THE ABOVE MENTIONED CODE SECTION FOR REVIEW BY SEOR.

13. PIPES EMBEDDED IN CMU:

    A. CMU: PIPES SHALL NOT BE EMBEDDED IN CMU EXCEPT WHERE SPECIFICALLY DETAILED. CONDUITS MAY BE EMBEDDED IF THE FOLLOWING IS TRUE.
        a. CONDUITS ARE < 3/4" IN DIAMETER.
        b. CONDUITS ARE NOT PLACED IN A CELL WITH REINFORCEMENT.
        c. CONDUITS ARE A MINIMUM OF 24" FROM JAMB/END REINFORCEMENT.
        d. CELLS WITH CONDUITS ARE SPACED 32" OC MIN.
        e. (2) MAX PER UNREINFORCED CELL, 3 DIAMETERS (MIN) O.C.
        f. CONDUITS ARE VERTICAL.

STEEL DECK

1. ROOF AND FLOOR DECK SHALL BE AS NOTED ON THE DRAWINGS.

2. DECK SHOP DRAWINGS, INCLUDING HEADED STUD LAYOUT, SHALL BE SUBMITTED TO THE SEOR FOR APPROVAL PRIOR TO FABRICATION.

3. DESIGN OF ALL STEEL DECK AND COMPOSITE SLABS ON STEEL DECK SHALL BE IN ACCORDANCE WITH SECTION 2210 OF THE CODE.

4. THE AMERICAN IRON AND STEEL INSTITUTE "SPECIFICATION FOR THE DESIGN OF COLD-FORMED STEEL STRUCTURAL MEMBERS" SHALL GOVERN THE DESIGN OF ALL DECK UNITS. ALL STEEL DECK, CLOSURES AND FLASHINGS SHALL CONFORM TO ASTM A653 SS OR ASTM A1063 SS.

5. STEEL DECK MANUFACTURER SHALL BE VERCO MANUFACTURING, INC. ALLOWABLE LOADS FOR DECK ARE DETERMINED FROM THE VERCO DECK CATALOG, IAPMO ES 0217. ALTERNATIVE EQUAL DECK PRODUCTS MAY BE CONSIDERED BUT ARE SUBJECT TO REVIEW AND APPROVAL BY SEOR.

6. UNITS SHALL BE CONTINUOUS OVER THREE OR MORE SPANS, EXCEPT WHERE THE FRAMING DOES NOT PERMIT. SHORING MAY BE REQUIRED AT NON-CONTINUOUS SPANS. DECK SHOP DRAWINGS SHALL INDICATE WHERE SHORING WILL BE REQUIRED. DECK SHALL BEAR 2" MINIMUM AT ALL SUPPORTS.

7. ALL WELDING OF STEEL DECK SHALL BE DONE BY CERTIFIED LIGHT GAGE WELDERS IN ACCORDANCE WITH "SPECIFICATIONS FOR WELDING SHEET STEEL IN STRUCTURES", AWS D1.3-08.

8. UNITS SHALL BE FASTENED TO THE STEEL SUPPORTS AT THE ENDS OF UNITS, AT INTERMEDIATE SUPPORTS AND TO STEEL SUPPORTS AT SIDE BOUNDARIES. WHERE NOT SPECIFICALLY NOTED IN DRAWINGS, FASTEN DECK USING 3/4" DIAMETER PUDDLE WELDS AT 1'-0" O.C. MAX. SHEAR STUDS WELDED THROUGH DECK MAY BE USED IN PLACE OF 3/4" DIAMETER PUDDLE WELDS.

9. FOR COMPOSITE SLABS CONSISTING OF CONCRETE FILL OVER STEEL DECK, THE SIDE LAPS OF ADJACENT UNITS SHALL BE FASTENED BETWEEN SUPPORTS BY BUTTON PUNCHING AT 36" O.C. MAX, OR PER SPACING INDICATED IN DECK SCHEDULE, WHICHEVER IS LESS. CONTRACTOR MAY DECREASE SPACING OF SIDE LAP ATTACHMENTS TO ACCOMMODATE CONSTRUCTION LOADING AS REQUIRED.

10. FOR BARE STEEL DECK, SIDE LAP CONNECTIONS FOR ADJACENT UNITS SHALL BE AS INDICATED IN DECK SCHEDULE. WHERE NOT SPECIFICALLY NOTED IN DRAWINGS, FASTEN BARE STEEL DECK USING TOP-SEAM WELDS AT 24" O.C. MAX.

11. PROVIDE FLASHING AND CLOSURE PLATES AT ENDS OF ALL UNITS, AROUND COLUMNS, AND AT ALL PERIMETER LOCATIONS REQUIRING CONCRETE.

12. ALL DECKS USED FOR COMPOSITE SLABS CONSISTING OF CONCRETE FILL OVER STEEL DECK SHALL HAVE VENT TABS FOR CONCRETE VENTILATION, UNO. ALL BARE STEEL DECKS SHALL BE A NON-VENTED TYPE, UNO.

13. ALL STEEL DECK SHALL BE GALVANIZED.

14. ALL SHORING OF STEEL DECK SHALL BE PER MANUFACTURER'S RECOMMENDATIONS, UNO.

REINFORCING STEEL (CONT.)

12. CONCRETE PROTECTION FOR REINFORCEMENT

    THE FOLLOWING MINIMUM CONCRETE COVER SHALL BE PROVIDED FOR REINFORCEMENT IN CAST-IN-PLACE CONCRETE (NON-PRESTRESSED):

CONDITION OF CONCRETE	BAR SIZE	MINIMUM CLEAR COVER
CONCRETE CAST AGAINST AND PERMANENTLY EXPOSED TO EARTH	ALL	3"
CONCRETE EXPOSED TO EARTH OR WEATHER	#6 & LARGER	2"
	#5 & SMALLER	$1\frac{1}{2}$"
SLABS, WALLS, & JOISTS NOT EXPOSED TO WEATHER OR IN CONTACT WITH SOIL	#14 & LARGER	$1\frac{1}{2}$"
	#11 AND SMALLER	$\frac{3}{4}$"
BEAMS & COLUMN TIES & STIRRUPS NOT EXPOSED TO WEATHER OR IN CONTACT WITH SOIL	ALL	$1\frac{1}{2}$"

13. MECHANICAL BAR SPLICE CONNECTIONS SHALL CONFORM TO THE REQUIREMENTS OF ACI 318-11 SECTION 12.14.3. USE OF MECHANICAL CONNECTIONS SHALL BE APPROVED BY THE STRUCTURAL ENGINEER. SPLICES MUST BE TESTED AS INDICATED IN THE CONCRETE REINFORCEMENT SPECIFICATION.

STRUCTURAL STEEL

1. STRUCTURAL STEEL SHALL BE DETAILED, FABRICATED AND ERECTED BY AN APPROVED AND LICENSED FABRICATOR IN ACCORDANCE WITH AISC 360-10 AND CHAPTER 22 OF THE CODE.

2. ALL STRUCTURAL STEEL SHALL CONFORM TO THE ASTM DESIGNATION AS INDICATED BELOW (UNO):

W SHAPES, WT SHAPES	A992
ANGLES, CHANNELS	A36
PLATES (AS NOTED ON DRAWINGS)	A36
SIMPLE SHEAR TAB CONNECTION PLATES (AS NOTED ON DRAWINGS)	A36
PIPE COLUMNS	A53, GR B
HSS SECTIONS	A500, GR B
HIGH STRENGTH BOLTS (AS NOTED ON DRAWINGS)	A325/F1852, A490/F2280
ANCHOR RODS (AS NOTED ON DRAWINGS)	F1554 GR36/55/105 A354 GR BD
COMMON/MACHINE BOLTS	A307 GR A

3. THE STRUCTURAL STEEL FABRICATOR SHALL FURNISH SHOP DRAWINGS OF ALL STEEL FOR REVIEW AND APPROVAL BY THE AOR AND SEOR PRIOR TO FABRICATION.

4. BOLT HOLES USED IN STEEL SHALL BE 1/16" LARGER IN DIAMETER THAN NOMINAL SIZE OF BOLT USED, EXCEPT AS NOTED.

5. ALL STRUCTURAL STEEL SURFACES THAT ARE ENCASED IN CONCRETE, MASONRY, SPRAY ON FIREPROOFING, OR ARE ENCASED BY BUILDING FINISH, SHALL BE LEFT UNPAINTED EXCEPT AS REQUIRED FOR DESIGNATION OF PROTECTED ZONES.

6. PRIOR TO FABRICATING PLATES, MEMBERS, OR OTHER STEEL ASSEMBLIES ATTACHED TO REINFORCED CONCRETE/MASONRY USING POST-INSTALLED ANCHORS, CONTRACTOR SHALL LOCATE ALL REINFORCEMENT AND CONFIRM CONSTRUCTABILTY OF ANCHOR LOCATIONS. SHOULD CONFLICTS WITH REINFORCEMENT OCCUR, CONTRACTOR SHALL COORDINATE AND SUBMIT ALTERNATE ANCHOR LOCATIONS AND REVISED STEEL FABRICATIONS TO SEOR FOR REVIEW AND APPROVAL. DO NOT CUT OR DAMAGE EXISTING REINFORCEMENT.

7. ALL STRUCTURAL STEEL AND MISCELLANEOUS METAL EXPOSED TO THE WEATHER SHALL BE HOT DIP GALVANIZED AFTER FABRICATION, UNLESS CALLED OUT TO BE PAINTED ON THE CONSTRUCTION DOCUMENTS. PROTECT FIELD WELDS EXPOSED TO THE WEATHER VIA PRIME AND PAINT OR BRUSH / COLD GALVANIZING. REFER TO ARCH DRAWINGS FOR STEEL FINISH.

8. ALL WELDING IS TO BE DONE BY CERTIFIED WELDERS USING E70XX ELECTRODES (UNO). ALL WELDS SHALL BE IN CONFORMANCE WITH THE PROJECT SPECIFICATIONS AND THE CODE FOR WELDING IN BUILDING CONSTRUCTION (AWS D1.1-10) OF THE AMERICAN WELDING SOCIETY. SEE SPECIAL INSPECTIONS SECTION FOR WELDING INSPECTION REQUIREMENTS. ALL WELDING FOR ELEMENTS OF THE LATERAL FORCE RESISTING SYSTEM SHALL BE PER AWS D1.8-09.

9. THE CONTRACTOR SHALL SUBMIT ALL WELDING PROCEDURE SPECIFICATIONS (WPS) FOR REVIEW BY SEOR. THE SUBMITTED WELDING PROCEDURES SHALL INCLUDE ONLY THOSE PROCEDURES RELEVANT TO THIS PROJECT. ALL WELDING PROCEDURE SPECIFICATIONS INTENDED FOR USE AT DEMAND CRITICAL WELDS OF DESIGNATED LATERAL FORCE-RESISTING SYSTEMS SHALL BE IDENTIFIED ON THE WPS. ALL WELDED JOINTS SHALL BE PREQUALIFIED PER AWS OR BE QUALIFIED BY TEST PER AWS. A PROCEDURE QUALIFICATION RECORD (PQR) SHALL BE INCLUDED WITH THE WPS IF THE WELDING PROCEDURE OR JOINT IS QUALIFIED BY TESTING. THE ELECTRODE MANUFACTURER AND PRODUCT/TRADE NAME SHALL BE IDENTIFIED IN THE WPS IN ADDITION TO THE AWS ELECTRODE CLASSIFICATION NAME. A COPY OF THE ELECTRODE MANUFACTURER'S TECHNICAL DATA SHEETS WITH THE RECOMMENDED WELDING PARAMETERS SHALL BE SUBMITTED WITH THE WPS.

10. ALL WELDING OF DESIGNATED LATERAL FORCE RESISTING SYSTEM MEMBERS (INCLUDING DRAG AND CHORD BEAMS) IS TO BE PERFORMED AND INSPECTED IN ACCORDANCE WITH AISC 341-10 AND AWS D1.8-09, IN ADDITION TO ALL OTHER REQUIREMENTS NOTED IN THIS SECTION.

11. WELD LENGTHS CALLED FOR ON PLANS ARE THE NET EFFECTIVE LENGTH REQUIRED. WHERE FILLET WELD SYMBOL IS GIVEN WITHOUT INDICATION OF SIZE, USE MINIMUM SIZE WELDS AS SPECIFIED IN AISC 360-10 SECTION J2.2b.

12.

CHARPY V NOTCH (CVN) REQUIREMENTS			
WELD TYPE	MINIMUM ABSORBED ENERGY (FT-LB)	TEMPERATURE (°F)	REFERENCE
ALL WELDS	20	0°	AWS 01.8-09 SECTION 6.3
DEMAND CRITICAL WELDS	40	70°	AISC 341-10 SECTION 4b

13. 100 PERCENT ULTRASONIC TESTING IS REQUIRED FOR ALL COMPLETE JOINT PENETRATION GROOVE WELDS.

14. IF INTERMIXING OF WELD FILLER MATERIAL IS REQUIRED AT SPECIFIC WELDED JOINTS, AND IF ONE OF THE FILLER METALS IS FCAW-S, SUBMIT A WELDING PROCEDURE SPECIFICATION (WPS) AND QUALIFY BY TESTING.

15. BACKUP BARS FOR STRUCTURAL MEMBERS NOT DESIGNATED AS PART OF THE SEISMIC LATERAL FORCE-RESISTING SYSTEM MAY REMAIN IN PLACE UNLESS NOTED IN DRAWINGS, OR WHEN ULTRASONIC TESTING INDICATES A POSSIBLE WELD DEFECT. IF DEFECTS ARE INDICATED BACKUP BAR IS TO BE REMOVED AND THE ROOT INSPECTED. IF IMPERFECTIONS ARE FOUND, THEY ARE TO BE REMOVED AND REPAIRED PER AWS STANDARDS.

16. DISCONTINUITIES IN WELDS CREATED BY ERRORS OR BY FABRICATION OR ERECTION OPERATIONS, SUCH AS TACK WELDS, ERECTION AIDS, AIR ARC GOUGING AND FLAME CUTTING SHALL BE REPAIRED AS DETAILED BY THE SEOR.

CONCRETE

1. ALL CONCRETE CONSTRUCTION SHALL CONFORM WITH CHAPTER 19 OF THE CODE AND WITH THE PROVISIONS OF ACI 318-11.

2. CONCRETE MIXES SHALL BE DESIGNED BY A LICENSED CIVIL ENGINEER, VALIDATED BY AN APPROVED TESTING LABORATORY AND REVIEW BY SEOR. THE INTENDED USE AND/OR LOCATION(S) IN STRUCTURE OR SITE SHALL BE NOTED ON ALL MIX DESIGNS. THE COMPRESSIVE STRENGTH OF THE CONCRETE SHALL BE PROPORTIONED BASED ON CHAPTER 5 OF ACI 318-11. SCHEDULE OF STRUCTURAL CONCRETE STRENGTHS AND LOCATIONS (UNO):

LOCATION IN STRUCTURE OR SITE	MINIMUM STRENGTH (PSI)	MAX DRY DENSITY (PCF)	SLUMP (IN±1)	MAX WATER /CEMENT RATIO	MAX % FLY ASH ASH BY WT
CONCRETE FOUNDATIONS	4000	150	4	0.6	15
NORMAL WEIGHT CONCRETE FILL OVER STEEL DECK	4000	150	4	0.44	15
CONCRETE SLAB ON GRADE, STAIRS ON GRADE, CURBS AND OTHER NON-STRUCTURAL CONCRETE	4000	150	4	0.40	15

3. PORTLAND CEMENT SHALL CONFORM TO ASTM C-150, TYPE II, UNO.

4. FOR SOILS WITH HIGH CONCENTRATIONS OF SULFATES (EXPOSURES S2 OR S3 PER ACI 318 TABLE 4.3.1) PORTLAND CEMENT SHALL BE TYPE V. GENERAL CONTRACTOR TO VERIFY WITH PROJECT GEOTECHNICAL REPORT.

5. AGGREGATE FOR HARDROCK CONCRETE SHALL CONFORM TO ALL REQUIREMENTS AND TESTS OF ASTM C33 AND PROJECT SPECIFICATIONS.

6. FLY ASH SHALL BE CLASS F AND CONFORM TO THE REQUIREMENTS OF ASTM C618.

7. CONCRETE MIXING OPERATION, ETC. SHALL CONFORM TO ASTM C94.

8. PLACEMENT OF CONCRETE SHALL CONFORM TO CHAPTER 5 OF ACI 318-11 AND PROJECT SPECIFICATIONS.

9. ALL CONCRETE SURFACES AGAINST WHICH NEW CONCRETE IS TO BE PLACED SHALL BE CLEANED AND ROUGHENED TO 1/4" AMPLITUDE.

10. ALL REINFORCING BARS, ANCHOR BOLTS AND OTHER CONCRETE INSERTS SHALL BE WELL SECURED IN POSITION PRIOR TO PLACING CONCRETE.

11. PIPES AND CONDUITS EMBEDDED IN CONCRETE:

    a. PIPES LARGER THAN 1-1/2" DIAMETER SHALL NOT BE EMBEDDED IN STRUCTURAL CONCRETE EXCEPT WHERE SPECIFICALLY APPROVED BY SEOR.
    b. NO CONDUITS SHALL BE PLACED IN CONCRETE FILL OVER METAL DECK.
    c. PIPES SHALL NOT DISPLACE OR INTERRUPT REINFORCING BARS.
    d. DO NOT STACK CONDUITS, SPACE EMBEDDED PIPES AND CONDUITS AT A MINIMUM OF AT A MINIMUM OF 3 DIAMETERS CLEAR FROM OTHER EMBEDDED PIPES/CONDUITS AND 1 $\frac{1}{2}$" CLEAR FROM REINFORCING BARS.

12. PROVIDE SLEEVES FOR PLUMBING AND ELECTRICAL OPENINGS IN CONCRETE BEFORE PLACING. DO NOT CUT ANY REINFORCING WHICH MAY CONFLICT. CORING IN CONCRETE IS NOT PERMITTED WITHOUT PRIOR REVIEW BY SEOR. NOTIFY THE SEOR IN ADVANCE OF CONDITIONS NOT SHOWN ON THE DRAWINGS. SEE THE DRAWINGS FOR ADDITIONAL RESTRICTIONS ON THE PLACEMENT OF OPENINGS IN SLABS AND WALLS.

13. CONCRETE FILL OVER STEEL DECK SHALL BE SCREEDED TO A CONSTANT THICKNESS AS SPECIFIED IN THE DECKING SCHEDULE.

14. PROVIDE 3/4" CHAMFER AT CONCRETE CORNERS UNLESS NOTED OTHERWISE. VERIFY LOCATIONS WITH ARCHITECT AS APPROPRIATE.

15. OPENINGS, POCKETS, ETC., LARGER THAN 6" SHALL NOT BE PLACED IN CONCRETE SLABS, DECKS, WALLS, UNLESS SPECIALLY DETAILED ON THE STRUCTURAL DRAWINGS. NOTIFY THE STRUCTURAL ENGINEER WHEN DRAWINGS BY OTHERS SHOW OPENINGS, POCKETS, ETC., LARGER THAN 6" NOT SHOWN ON THE STRUCTURAL DRAWINGS, BUT WHICH ARE LOCATED IN STRUCTURAL MEMBERS. FOR ANY FURTHER RESTRICTIONS ON OPENINGS IN STRUCTURAL ELEMENTS, SEE APPLICABLE SECTIONS BELOW.

REINFORCING STEEL

1. REINFORCING BARS SHALL CONFORM TO THE REQUIREMENTS OF CHAPTER 19 OF THE CODE AND WITH THE PROVISIONS OF ACI 318-11, ASTM A615, GRADE 60 UNO.

2. BARS SHALL BE CLEAN OF RUST, GREASE, OR OTHER MATERIALS LIKELY TO IMPAIR BOND. ALL REINFORCING BAR BENDS SHALL BE MADE COLD.

3. WELDED WIRE REINFORCEMENT (WWR), PLAIN OR DEFORMED, SHALL CONFORM TO ASTM A185. WELDED DEFORMED WIRE REINFORCEMENT (WWR) SHALL CONFORM TO ASTM A1064. ALL WWR FOR STAIR PANS AND ALL WWR FOR CONCRETE FILL ON METAL DECK TO BE PLAIN WWR. PROVIDE LAPS PER ACI 318-11 SECTION 12.18 OR 12.19, 8" MINIMUM. WWR SHALL BE SUPPORTED ON APPROVED CHAIRS.

4. REINFORCING BAR LAP SPLICES SHALL BE MADE AS INDICATED ON THE DRAWINGS. LAP ALL HORIZONTAL BARS AT CORNERS AND INTERSECTIONS. STAGGER ALL SPLICES UNLESS NOTED OTHERWISE ON PLANS.

    A. MINIMUM LAP SPLICE LENGTH FOR REINFORCING STEEL BARS IN CONCRETE SHALL BE PER ACI 318-11 SECTION 12.15 AND THE REINFORCING SCHEDULE ON THE DRAWINGS.

    B. MINIMUM LAP SPLICE LENGTH FOR REINFORCING STEEL BARS IN MASONRY SHALL BE PER ACI 530-11 SECTION 2.1.7.7.1 OR 3.3.3.4 AND THE REINFORCING THE DRAWINGS.

5. ALL BARS SHALL BE MARKED SO THEIR IDENTIFICATION CAN BE MADE WHEN THE FINAL IN-PLACE INSPECTION IS MADE. ALL REINFORCING CONFORMING TO DIFFERING ASTM SPECIFICATIONS AND/OR OF DIFFERING GRADES SHALL BE CLEARLY MARKED TO DIFFERENTIATE THEM FROM OTHER REINFORCING STEEL IF CONCURRENTLY PRESENT ON SITE.

6. WHERE WELDING OF REINFORCING IS APPROVED BY THE STRUCTURAL ENGINEER, IT SHALL BE DONE BY AWS CERTIFIED WELDERS USING E80XX OR APPROVED ELECTRODES. WELDING PROCEDURES SHALL CONFORM TO THE REQUIREMENTS OF STRUCTURAL WELDING CODE - REINFORCING STEEL", AWS-D1.4-11. REINFORCING BARS TO BE WELDED SHALL CONFORM TO THE REQUIREMENTS OF ASTM A706.

7. REINFORCING STEEL SHALL BE ACCURATELY PLACED AND ADEQUATELY SUPPORTED BEFORE THE CONCRETE IS PLACED AND SHALL BE SECURED AGAINST DISPLACEMENT DURING CONSTRUCTION WITHIN PERMITTED TOLERANCES. ADEQUATE SUPPORTS ARE ALSO NECESSARY TO KEEP THE REINFORCING STEEL AT THE PROPER DISTANCE FROM THE FORMS. USE WIRE BAR SUPPORTS, PRECAST CONCRETE SUPPORTS, SPACERS, BOLSTERS, REINFORCEMENT OR OTHER MEANS OF SUPPORT PER THE "CRSI MANUAL OF STANDARD PRACTICE", LATEST EDITION.

8. REINFORCING STEEL SHALL BE DETAILED IN ACCORDANCE WITH THE "CRSI MANUAL OF STANDARD PRACTICE FOR DETAILING REINFORCED CONCRETE STRUCTURES", LATEST EDITION.

9. COMPLETE AND DETAILED REINFORCING PLACEMENT DRAWINGS SHALL BE PREPARED AND SUBMITTED TO THE ARCHITECT FOR REVIEW BY SEOR PRIOR TO FABRICATION IN ACCORDANCE WITH THE SPECIFICATIONS AND APPLICABLE CODES. THESE DRAWINGS SHALL BE AVAILABLE ON THE JOB SITE PRIOR TO PLACING OF CONCRETE. THE REINFORCING PLACEMENT DRAWINGS SHALL INCLUDE ALL PRIMARY REINFOREMENT, LAP SPLICES, TIES, DOWELS, HEADED U-DOWELS, EMBED PLATES, ANCHOR BOLTS, ETC. AREAS OF CONGESTION SHALL BE DETAILED SUFFICIENTLY TO DEMONSTRATE THAT PLACEMENT OF REBAR MEETS SPACING REQUIREMENTS OF ACI 318-11.

10. MILL TEST REPORTS FOR GRADE 60 BARS SHALL BE SUBMITTED TO THE INSPECTOR PRIOR TO PLACEMENT OF CONCRETE.

11. CONTINUOUS INSPECTION OF CONCRETE SHALL INCLUDE INSPECTION DURING INSTALLATION OF REINFORCING STEEL. INSPECTION SHALL BE SCHEDULED SO THAT PLACEMENT OF REINFORCING STEEL, CONDUIT, SLEEVES, AND EMBEDDED ITEMS MAY BE CORRECTED PRIOR TO PLACEMENT OF OVERLYING GRIDS OR REINFORCING STEEL.

ARCHITECT:

COLE ARCHITECTS

COLE ARCHITECTS | 802 W. BANNOCK SUIT 208
Boise, ID 83702 | (208) 345-1800

TCA architecture • planning

TCA | 6211 Roosevelt Way NE
Seattle, WA 98115 | (206) 522-3820

STAMP:

NOT FOR CONSTRUCTION

CONSULTANT:

kpff

412 E. Parkcenter Blvd, Suite 204
Boise, ID 83706
O: 208.336.6985
www.kpff.com

PROJECT INFORMATION:

City of Boise Fire Station 4

8485 W. Ustick Rd, Boise, ID 83704

REVISIONS:

MARK	DATE	DESCRIPTION

PROJECT PHASE	75% CD
PROJECT NUMBER	114747.01
PROJECT MANAGER	J. Chatfield
PROJECT ARCHITECT	J. Chatfield
DESIGN	J. Chatfield
DRAWN BY	Author

SHEET NAME:

GENERAL STRUCTURAL NOTES

SHEET NUMBER:

S002

11.09.15

COLD-FORMED STEEL (LIGHT GAGE METAL FRAMING)

1. ALL LIGHT GAGE METAL FRAMING CONSTRUCTION SHALL BE IN ACCORDANCE WITH SECTION 2211A OF THE CODE AND AISI S100-07 "SPECIFICATIONS FOR DESIGN OF COLD FORMED STEEL STRUCTURAL MEMBERS".

2. MEMBER IDENTIFICATION SHALL BE AS SHOWN:

   (A) MEMBER DEPTH:
   (EXAMPLE: 6" = 600/100 INCHES)
   ALL MEMBER DEPTHS ARE TAKEN IN 1/100 INCH INCREMENTS. FOR "T" SECTIONS, MEMBER DEPTH IS THE INSIDE TO INSIDE DIMENSION.

   (B) STYLE:
   (EXAMPLE: STUD OR JOIST SECTION = "S")
   THE FOUR ALPHA CHARACTERS USED TO DESIGNATE THE TYPE OF SECTION ARE:
   - S = STUD OR JOIST SECTIONS
   - T = TRACK SECTIONS
   - U = CHANNEL SECTIONS
   - F = FURRING CHANNEL SECTIONS

   (C) FLANGE WIDTH:
   (EXAMPLE: 1 5/8" = 1.625" = 162/100 INCHES)
   ALL MEMBER FLANGE WIDTH ARE TAKEN IN 1/100 INCH INCREMENTS.

   (D) MATERIAL THICKNESS:
   (EXAMPLE: 0.054" = 54 MIL = 54/1,000 INCHES)
   MATERIAL THICKNESS IS THE MINIMUM BASE METAL THICKNESS IN MILS. MINIMUM BASE METAL THICKNESS REPRESENTS 95% OF THE DESIGN THICKNESS.

   (A) (B) (C) (D)
   600 S 162 - 54

3. ALL CALCULATED MEMBER PROPERTIES PER AISI SPECIFICATIONS ARE BASED ON THE FOLLOWING THICKNESSES:

MINIMUM THICKNESS	REFERENCE GAGE	DESIGN THICKNESS
33 MIL	20 GA - STRUCTURAL	0.0346"
43 MIL	18 GA	0.0451"
54 MIL	16 GA	0.0566"
68 MIL	14 GA	0.0713"
97 MIL	12 GA	0.1017"
118 MIL	10 GA	0.1242"

4. ALL LIGHT GAGE METAL FRAMING SHALL CONFORM WITH THE FOLLOWING:

   GALVANIZED STUDS & TRACKS: 12 (97), 14 (68) OR 16 (54) GAGE (MILS) — ASTM A653 SQ, GR 50 (Fy = 50,000 PSI)

   GALVANIZED STUDS & TRACKS: 18 (43), 20 (33) GAGE (MILS) — ASTM A653 SQ, GR 33 (Fy = 33,000 PSI)

   GALVANIZED BACKING PLATES: ASTM A653 SQ, GR 50 (Fy = 50,000 PSI)

   GALVANIZED END CLOSURES, BRIDGING AND ACCESSORIES — ASTM A653 SQ, GR 33 (Fy = 33,000 PSI)

5. ALL LIGHT GAGE METAL FRAMING SHALL BE GALVANIZED.

6. DOUBLE VERTICAL STUDS SHALL BE STITCH WELDED TOGETHER ON BOTH FLANGES WITH 1/16" GROOVE WELDS x 1" LONG AT 12" ON CENTER, U.N.O. ON DRAWINGS.

7. TOP AND BOTTOM TRACK GAGE THICKNESS SHALL MATCH THE GAGE THICKNESS OF THE WALL STUDS, U.N.O.

8. ALL SHEET METAL SCREWS SHALL PROTRUDE 1/4" MIN THROUGH METAL FRAMING.

9. THE CONTRACTOR IS PROHIBITED FROM USING TORCHES TO BURN HOLES IN TRACKS OR STUDS.

OPEN WEB STEEL JOISTS:

1. DESIGN, DETAILING, FABRICATION, AND ERECTION OF OPEN-WEB STEEL JOISTS SHALL BE THE SOLE RESPONSIBILITY OF THE CONTRACTOR. DESIGN SHALL COMPLY WITH THE CURRENT BUILDING CODE AND WITH LOADS SHOWN ON THE GENERAL NOTES AND ON SHEET S1.02 & S1.03.

2. SHOP DRAWINGS (STAMPED AND SIGNED BY A LICENSED STRUCTURAL OR CIVIL ENGINEER IN THE STATE OF IDAHO) AND CALCULATIONS FOR OPEN-WEB STEEL JOISTS SHALL BE SUBMITTED FOR APPROVAL TO THE ARCHITECT OR STRUCTURAL ENGINEER PRIOR TO FABRICATION.

3. NON-COMPOSITE LONGSPAN STEEL JOISTS, NOTED AS TYPE "LH", SHALL COMPLY WITH SJI-LH/DLH-2010 STANDARD SPECIFICATION FOR LONGSPAN STEEL JOISTS, 2010. DO NOT CAMBER NON-COMPOSITE STEEL JOISTS.

4. MAXIMUM BEARING SEAT DEPTH FOR ALL OPEN WEB STEEL JOISTS IS 5".

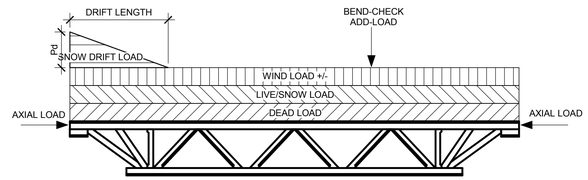

JOIST SCHEDULE										
JOIST DESIGNATION	JOIST DEPTH	DESIGN LOADS, PLF						CONCENTRATED DESIGN LOAD, LB		
		DEAD LOAD[1]	LIVE/SNOW LOAD	SNOW LOAD[6]			WIND UPLIFT[2]	BEND-CHECK[3]	ADD-LOAD[4]	AXIAL[5]
				P_f PLF	P_d PLF	DRIFT LENGTH				
OWSJ-01	10"	220	175	98	275	9'-6"	197			
OWSJ-01M	10"	220	175	98	275	9'-6"	197	347	703	
OWSJ-02	18"	220	175	98	167	5'-6"	197			
OWSJ-02M	18"	220	175	98	167	5'-6"	197	300	300	
OWSJ-03	32"	276	175	98	207	7'-0"	275			
OWSJ-03A	32"	276	175	98	207	7'-0"	275			45,000
OWSJ-03M	32"	276	175	98	207	7'-0"	275	275	275	
OWSJ-04	18"	220	175	98	212	7'-6"	197			

1. DEAD LOADS LISTED ARE SUPERIMPOSED LOADS. SELF-WEIGHT OF JOISTS ARE NOT INCLUDED

2. WIND UPLIFT VALUES PROVIDED ARE SERVICE-LEVEL WIND PRESSURES FROM ASCE 7-10, SECTION 30.4. NET UPLIFT SHALL BE DETERMINED USING THE APPROPRIATE LOAD COMBINATIONS OF ASCE 7-10.

3. FOR ADD-LOAD, DESIGN JOIST FOR CONCENTRATED LOADS LOCATED AT ANY ONE PANEL POINT ALONG THE JOIST. ADD LOADS SHOULD BE CONSIDERED AS DEAD LOADS.

4. FOR BEND-CHECK, DESIGN JOIST TOP CHORD FOR ADDITIONAL BENDING STRESSES RESULTING FROM CONCENTRATED LOADS LOCATED AT ANY LOCATION ALONG CHORD.

5. AXIAL LOADS PROVIDED ARE DRAG LOADS USING AMPLIFIED SEISMIC LOAD COMBINATIONS.

6. COMBINE FLAT ROOF SNOW LOAD (P_f) AND DRIFT LOAD (P_d). DRIFT LOADS INDICATED SHOULD BE APPLIED TO BOTH ENDS OF JOIST U.N.O.

STRUCTURAL STEEL

1. STRUCTURAL STEEL SHALL BE DETAILED, FABRICATED AND ERECTED BY AN APPROVED AND LICENSED FABRICATOR IN ACCORDANCE WITH AISC 360-10 AND CHAPTER 22 OF THE CODE.

2. ALL STRUCTURAL STEEL SHALL CONFORM TO THE ASTM DESIGNATION AS INDICATED BELOW (UNO):

W SHAPES, WT SHAPES	A992
ANGLES, CHANNELS	A36
PLATES (UNLESS OTHERWISE NOTED ON DRAWINGS)	A36
PIPE COLUMNS	A53, GR B
HSS SECTIONS	A500, GR B
HIGH STRENGTH BOLTS (AS NOTED ON DRAWINGS)	A325/F1852, A490SC/F2280SC A325SC/F1852SC
ANCHOR RODS (AS NOTED ON DRAWINGS)	F1554 GR36/55/105 A354 GR BD
COMMON/MACHINE BOLTS	A307 GR A

3. THE STRUCTURAL STEEL FABRICATOR SHALL FURNISH SHOP DRAWINGS OF ALL STEEL FOR REVIEW AND APPROVAL BY THE AOR AND SEOR PRIOR TO FABRICATION.

4. BOLT HOLES USED IN STEEL SHALL BE 1/16" LARGER IN DIAMETER THAN NOMINAL SIZE OF BOLT USED, EXCEPT AS NOTED.

5. ALL STRUCTURAL STEEL SURFACES THAT ARE ENCASED IN CONCRETE, MASONRY, SPRAY ON FIREPROOFING, OR ARE ENCASED BY BUILDING FINISH, SHALL BE LEFT UNPAINTED, EXCEPT AS REQUIRED FOR DESIGNATION OF PROTECTED ZONES.

6. PRIOR TO FABRICATING PLATES, MEMBERS, OR OTHER STEEL ASSEMBLIES ATTACHED TO REINFORCED CONCRETE USING POST-INSTALLED ANCHORS, CONTRACTOR SHALL LOCATE ALL REINFORCEMENT AND CONFIRM CONSTRUCTABILTY OF ANCHOR LOCATIONS. SHOULD CONFLICTS WITH REINFORCEMENT OCCUR, CONTRACTOR SHALL COORDINATE AND SUBMIT ALTERNATE ANCHOR LOCATIONS AND REVISED STEEL FABRICATIONS TO SEOR FOR REVIEW AND APPROVAL. DO NOT CUT OR DAMAGE EXISTING REINFORCEMENT.

7. ALL STRUCTURAL STEEL AND MISCELLANEOUS METAL EXPOSED TO THE WEATHER SHALL BE HOT DIP GALVANIZED AFTER FABRICATION, UNLESS CALLED OUT TO BE PAINTED ON THE CONSTRUCTION DOCUMENTS. PROTECT FIELD WELDS EXPOSED TO THE WEATHER VIA PRIME AND PAINT OR BRUSH / COLD GALVANIZING. REFER TO ARCH DRAWINGS FOR STEEL FINISH. ALL ARCHITECTURALLY EXPOSED STRUCTURAL STEEL (AESS) SHALL CONFORM TO REQUIREMENTS OF AISC 303-10.

8. ALL WELDING IS TO BE DONE BY CERTIFIED WELDERS USING E70XX ELECTRODES (UNO). ALL WELDS SHALL BE IN CONFORMANCE WITH THE PROJECT SPECIFICATIONS AND THE CODE FOR WELDING IN BUILDING CONSTRUCTION (AWS D1.1-10) OF THE AMERICAN WELDING SOCIETY. SEE SPECIAL INSPECTIONS SECTION FOR WELDING INSPECTION REQUIREMENTS. ALL WELDING FOR ELEMENTS OF THE LATERAL FORCE RESISTING SYSTEM SHALL PER AWS D1.8-09.

9. THE CONTRACTOR SHALL SUBMIT ALL WELDING PROCEDURE SPECIFICATIONS FOR REVIEW AND APPROVAL BY SEOR. THE SUBMITTED WELDING PROCEDURES SHALL INCLUDE ONLY THOSE PROCEDURES RELEVANT TO THIS PROJECT. ALL WELDED JOINTS SHALL BE PREQUALIFIED PER AWS OR BE QUALIFIED BY TEST PER AWS. A PROCEDURE QUALIFICATION RECORD (PQR) SHALL BE INCLUDED WITH THE WPS IF THE WELDING PROCEDURE OR JOINT IS QUALIFIED BY TESTING. THE ELECTRODE MANUFACTURER AND PRODUCT/TRADE NAME SHALL BE IDENTIFIED IN THE WPS IN ADDITION TO THE AWS ELECTRODE CLASSIFICATION NAME. A COPY OF THE ELECTRODE MANUFACTURER'S TECHNICAL DATA SHEETS WITH THE RECOMMENDED WELDING PARAMETERS SHALL BE SUBMITTED WITH THE WPS.

10. ALL WELDING OF DESIGNATED LATERAL FORCE RESISTING SYSTEM MEMBERS (INCLUDING DRAG AND CHORD BEAMS) IS TO BE PERFORMED AND INSPECTED IN ACCORDANCE WITH AWS D1.8-09, IN ADDITION TO ALL OTHER REQUIREMENTS NOTED IN THIS SECTION.

11. WELD LENGTHS CALLED FOR ON PLANS ARE THE NET EFFECTIVE LENGTH REQUIRED. WHERE FILLET WELD SYMBOL IS GIVEN WITHOUT INDICATION OF SIZE, USE MINIMUM SIZE WELDS AS SPECIFIED IN AISC 360-10 SECTION J2.2b.

12. THE USE OF E70-T4 WELDING WIRE IS NOT ALLOWED FOR ANY APPLICATION.

13. 100 PERCENT ULTRASONIC TESTING IS REQUIRED FOR ALL COMPLETE JOINT PENETRATION GROOVE WELDS.

14. IF INTERMIXING OF WELD FILLER MATERIAL IS REQUIRED AT SPECIFIC WELDED JOINTS, AND IF ONE OF THE FILLER METALS IS FCAW-S, SUBMIT A WELDING PROCEDURE SPECIFICATION (WPS) AND QUALIFY BY TESTING.

15. BACKUP BARS MAY REMAIN IN PLACE UNLESS NOTED ON PLANS, OR WHEN ULTRASONIC TESTING INDICATES A POSSIBLE WELD DEFECT. IF DEFECTS ARE INDICATED BACKUP BAR IS TO BE REMOVED AND THE ROOT INSPECTED. IF IMPERFECTIONS ARE FOUND, THEY ARE TO BE REMOVED BY BACKGOUGING TO SOUND MATERIAL & CLEANED BY GRINDING IF BACKGOUGED BY AIR ARC METHOD. THE BACKGOUGED AREA OF THE WELD IS TO BE REWELDED.

16. ALL INTERIOR EXPOSED WELDS, WHICH ARE LOCATED WITHIN A HEIGHT OF 6'-0" FROM THE INTERIOR FINISH FLOOR ELEVATION, SHALL BE GROUND SMOOTH AND FREE OF BURS AND SURFACE IRREGULARITIES. SEE SPECIFICATIONS FOR ADDITIONAL PAINTING AND FINISH INFORMATION.

HEADED STUDS

1. ALL HEADED STUDS WELDED TO BEAMS OR CONCRETE CONNECTIONS SHALL BE TRU-WELD STUDS PER ICC-ESR 2577, OR NELSON STUDS PER ICC-ESR 2856, OR APPROVED EQUAL.

2. ALL HEADED STUDS SHALL BE AUTOMATICALLY END WELDED IN SHOP OR FIELD WITH EQUIPMENT RECOMMENDED BY MANUFACTURER OF STUDS IN SUCH A MANNER AS TO PROVIDE COMPLETE FUSION BETWEEN THE WELDED END OF THE STUD AND THE PLATE. WELDING SHALL BE DONE ONLY BY QUALIFIED WELDERS APPROVED BY AN AWS CERTIFIED WELD INSPECTOR.

3. STEEL SHEAR STUD MATERIAL, WELDING AND INSPECTION SHALL BE IN ACCORDANCE WITH "STRUCTURAL WELDING CODE", AWS D1.1-10. ALL STUDS SHALL BE 3/4" DIAMETER X 5" LONG, SPACED AT 12" 0.C. MAXIMUM, UNO.

STEEL DECK

1. ROOF AND FLOOR DECK SHALL BE AS NOTED ON THE DRAWINGS. MINIMUM PROPERTIES ARE AS FOLLOWS:

DECK PROFILE AND GAGE	I (IN4)	+S(IN3)	-S(IN3)	FY (KSI)
3" x 18GA DECK	1.213	0.752	0.768	50
HSB-36 x 18GA DECK	0.304	0.318	0.331	40

2. DESIGN OF ALL STEEL DECK AND COMPOSITE SLABS ON STEEL DECK SHALL BE IN ACCORDANCE WITH SECTION 2210 OF THE CODE.

3. THE AMERICAN IRON AND STEEL INSTITUTE "SPECIFICATION FOR THE DESIGN OF COLD-FORMED STEEL STRUCTURAL MEMBERS" SHALL GOVERN THE DESIGN OF ALL DECK UNITS. ALL STEEL DECK, CLOSURES AND FLASHINGS SHALL CONFORM TO ASTM A653 SS OR ASTM A1063 SS.

4. UNITS SHALL BE CONTINUOUS OVER THREE OR MORE SPANS, EXCEPT WHERE THE FRAMING DOES NOT PERMIT. SHORING MAY BE REQUIRED AT NON-CONTINUOUS SPANS. DECK SHOP DRAWINGS SHALL INDICATE WHERE SHORING WILL BE REQUIRED. DECK SHALL BEAR 2" MINIMUM AT ALL SUPPORTS.

5. ALL WELDING OF STEEL DECK SHALL BE DONE BY CERTIFIED LIGHT GAGE WELDERS IN ACCORDANCE WITH "SPECIFICATIONS FOR WELDING SHEET STEEL IN STRUCTURES", AWS D1.3-08.

6. FOR COMPOSITE SLABS CONSISTING OF CONCRETE FILL OVER STEEL DECK, THE SIDE LAPS OF ADJACENT UNITS SHALL BE FASTENED BETWEEN SUPPORTS BY BUTTON PUNCHING AT 36" O.C. MAX, OR PER SPACING INDICATED IN DECK SCHEDULE, WHICHEVER IS LESS. CONTRACTOR MAY DECREASE SPACING OF SIDE LAP ATTACHMENTS TO ACCOMMODATE CONSTRUCTION LOADING AS REQUIRED.

7. PROVIDE FLASHING AND CLOSURE PLATES AT ENDS OF ALL UNITS, AROUND COLUMNS, AND AT ALL PERIMETER LOCATIONS REQUIRING CONCRETE.

8. ALL DECKS USED FOR COMPOSITE SLABS CONSISTING OF CONCRETE FILL OVER STEEL DECK SHALL HAVE VENT TABS FOR CONCRETE VENTILATION, UNO. ALL BARE STEEL DECKS SHALL BE A NON-VENTED TYPE, UNO.

9. ALL STEEL DECK SHALL BE GALVANIZED.

10. ALL SHORING OF STEEL DECK SHALL BE PER MANUFACTURER'S RECOMMENDATIONS, UNO.

ARCHITECT:

COLE ARCHITECTS
COLE ARCHITECTS | 802 W. BANNOCK SUIT 208
Boise, ID 83702 | (208) 345-1800

TCA architecture • planning
TCA | 6211 Roosevelt Way NE
Seattle, WA 98115 | (206) 522-3820

STAMP:

NOT FOR CONSTRUCTION

CONSULTANT:

kpff
412 E. Parkcenter Blvd, Suite 204
Boise, ID 83706
O: 208.336.6985
www.kpff.com

PROJECT INFORMATION:

City of Boise Fire Station 4

8485 W. Ustick Rd, Boise, ID 83704

REVISIONS:

MARK	DATE	DESCRIPTION

PROJECT PHASE	75% CD
PROJECT NUMBER	114747.01
PROJECT MANAGER	J. Chatfield
PROJECT ARCHITECT	J. Chatfield
DESIGN	J. Chatfield
DRAWN BY	Author

SHEET NAME:

GENERAL STRUCTURAL NOTES

SHEET NUMBER:

S002

11.09.15

SPECIAL INSPECTIONS

SPECIAL INSPECTION SCHEDULE [1,2,3]
ESTABLISHED PER 2009 IBC SECTION 110 & CHAPTER 17

ITEM	CONTINUOUS INSPECTION	PERIODIC INSPECTION	COMMENTS
Soils			Per IBC 1705.6
Adequate materials to achieve design bearing capacity		X	By Geotechnical engineer
Excavation extend to proper deoth and material		X	By Geotechnical engineer
Classification and Testing of Compacted Fill		X	By Geotechnical engineer
Subgrade and site preparation prior to placement of fill		X	By Geotechnical engineer
Use of proper materials, densities, and lift thicknesses duirng placement and compaction of fills.	X		By Geotechnical engineer
Concrete			Per IBC 1705.3
Reinforcing placement		X	
Reinforcing welding	X		
Use of Approved Mix Design		X	
Anchor bolts & inserts		X	
Preparation of test specimens	X		
Concrete placement	X		
Adhesive anchor placement	X		Ref. note 5
Mechanical anchor placement	X		Ref. note 5
Embedded steel items		X	
Curing		X	
Slab on grade		X	Ref. note 13
Structural steel			Ref. note 4
Material verification		X	Ref. note 6
Fabrication & erection		X	Ref. note 7
High strength bolting	X	X	Ref. note 8
Single pass fillet welds ≤5/16"		X	Ref. note 9
All other fillet welds	X		Ref. note 9
Partial/complete penetration weld	X		Ref. note 10
Plug & slot welds	X		Ref. note 9
Other welding			
Welding of anchors and studs		X	
Welding-stairs/railing systems		X	
Metal deck welding		X	
Structural masonry			Ref. note 11
Verify compliance with the approved submittals		X	TMS 602/ACI 530.1/ASCE 6 Art. 1.5
As masonry construction begins, verify that the following are in compliance:			
a. Proportions of site-prepared mortar		X	TMS 602/ACI 530.1/ASCE 6 Art. 2.1, 2.6A
b. Construction of mortar joints		X	TMS 602/ACI 530.1/ASCE 6 Art. 3.3B
c. Location of reinforcement and connectors		X	TMS 602/ACI 530.1/ASCE 6 Art. 3.4, 3.6A
Prior to grouting, verify that the following are in compliance:			
a. Grout space		X	TMS 602/ACI 530.1/ASCE 6 Art. 3.2D, 3.2F
b. Grade, type, and size of reinforcement and anchor bolts		X	TMS 602/ACI 530.1/ASCE 6 Art. 2.4, 3.4 TMS 402/ACI 530/ASCE 5 Sec. 1.16
c. Placement of reinforcement and connectors		X	TMS 602/ACI 530.1/ASCE 6 Art. 3.2E, 3.4, 3.6A TMS 402/ACI 530/ASCE 5 Sec. 1.16
d. Proportions of site-prepared grout		X	TMS 602/ACI 530.1/ASCE 6 Art. 2.6B, 2.4G, 1.b
e. Construction of mortar joints		X	TMS 602/ACI 530.1/ASCE 6 Art. 3.3B
Verify during construction:			
a. Size and location of structural elements		X	TMS 602/ACI 530.1/ASCE 6 Art. 3.3F
b. Type, size, and location of anchors, including other details of anchorage of masonry to structural members, frames, or other construction		X	TMS 402/ACI 530/ASCE 5 Sec. 1.16.4.3, 1.17.1
c. Welding of reinforcement	X		TMS 402/ACI 530/ASCE 5 Sec. 2.1.7.7.2, 3.3.3.4 (c), 8.3.3.4 (b)
d. Preparation, construction, and protection of masonry during cold weather (temperature below 40°F) or hot weather (temperature above 90° F)		X	TMS 602/ACI 530.1/ASCE 6 Art. 1.8C, 1.8D
Observe preparation of grout specimens, mortar specimens, and/or prisms		X	TMS 602/ACI 530.1/ASCE 6 Art. 1.4B.2.a.3, 1.4B.2.b.3, 1.4B.2.c.3, 1.4B.3, 1.4B.4
Non-Load Bearing Cold Formed Steel			
Exterior wall framing		X	Ref. note 12
Welding		X	Ref. note 9

INSPECTION SCHEDULE NOTES

1. THE ITEMS CHECKED WITH AN "X" SHALL BE INSPECTED IN ACCORDANCE WITH IBC CHAPTER 17 BY A CERTIFIED SPECIAL INSPECTOR FROM AN ESTABLISHED TESTING AGENCY. FOR MATERIAL SAMPLING AND TESTING REQUIREMENTS, REFER TO PROJECT SPECIFICATIONS, THE STRUCTURAL NOTES AND THE NOTES BELOW. THE TESTING AGENCY SHALL SEND COPIES OF ALL STRUCTURAL TESTING AND INSPECTION REPORTS DIRECTLY TO THE ARCHITECT, ENGINEER, CONTRACTOR AND BUILDING OFFICIAL. ANY MATERIALS WHICH FAIL TO MEET THE PROJECT SPECIFICATIONS SHALL IMMEDIATELY BE BROUGHT TO THE ATTENTION OF THE ARCHITECT. SPECIAL INSPECTION TESTING REQUIREMENTS APPLY EQUALLY TO ALL BIDDER DESIGNED COMPONENTS. INSPECTION AND TESTING REQUIREMENTS FOR SYSTEMS DESIGNED BY OTHERS SHALL BE DEFINED BY THE REGISTERED DESIGN PROFESSIONAL RESPONSIBLE FOR THEIR DESIGN, EXCEPT THAT THE INSPECTION REQUIREMENTS SHALL NOT BE LESS THAN SPECIFIED IN THIS SCHEDULE.

2. SPECIAL INSPECTION IS NOT REQUIRED FOR WORK PERFORMED BY AN APPROVED FABRICATOR PER IBC SECTION 1704.2.5.2.

3. CONTINUOUS SPECIAL INSPECTION MEANS THAT THE SPECIAL INSPECTOR IS ON THE SITE AT ALL TIMES OBSERVING THE WORK REQUIRING SPECIAL INSPECTION (IBC 1702). PERIODIC SPECIAL INSPECTION MEANS THAT THE SPECIAL INSPECTOR IS ON SITE AT TIME INTERVALS NECESSARY TO CONFIRM THAT ALL WORK REQUIRING SPECIAL INSPECTION IS IN COMPLIANCE.

4. SPECIAL INSPECTION FOR STRUCTURAL STEEL SHALL BE PER IBC 1705.2.1 AND AISC 360-10 CHAPTER N UNLESS NOTED OTHERWISE.

5. INSPECTION OF POST-INSTALLED ANCHORS SHALL CONFORM TO THE REQUIREMENTS OF THE APPLICABLE ICC-ES REPORT.

6. STRUCTURAL STEEL IDENTIFICATION MARKINGS SHALL CONFORM TO AISC 360, STEEL DECK IDENTIFICATION MARKINGS SHALL CONFORM TO AISC STANDARDS SPECIFIED AND THE MANUFACTURER'S CERTIFIED TEST REPORTS SHALL BE REVIEWED. WELD FILLER MATERIALS SHALL HAVE IDENTIFICATION MARKINGS TO CONFORM TO AWS SPECIFICATION AND THE MANUFACTURER'S CERTIFICATE OF COMPLIANCE IS REQUIRED.

7. INSPECTION OF STRUCTURAL STEEL SHALL BE IN ACCORDANCE WITH IBC SECTION 1705.2. THE STEEL FRAME SHALL BE INSPECTED FOR COMPLIANCE WITH APPROVED CONSTRUCTION DOCUMENTS INCLUDING BRACING, STIFFENING, MEMBER LOCATIONS AND PROPER APPLICATION OF JOINT DETAILS AT EACH CONNECTION.

8. INSPECTION OF BOLT INSTALLATION FOR PRETENSIONING IS PERMITTED TO BE PERFORMED ON A PERIODIC BASIS WHEN USING THE TURN-OF-NUT METHOD WITH MATCHMARKING TECHNIQUES, THE DIRECT TENSION INDICATOR METHOD, OR THE ALTERNATE DESIGN FASTENER (TWIST-OFF BOLT) METHOD. JOINTS DESIGNATED AS SNUG TIGHT NEED ONLY PERIODIC INSPECTION. JOINTS DESIGNATED AS SLIP-CRITICAL SHALL HAVE CONTINIUOUS INSPECTION OF THE BOLTING AND FAYING SURFACE.

9. ALL WELDS SHALL BE VISUALLY INSPECTED.

10. ALL COMPLETE PENETRATION WELDS SHALL BE TESTED ULTRASONICALLY OR BY USING ANOTHER APPROVED METHOD.

11. SPECIAL INSPECTION FOR REINFORCED MASONRY SHALL BE PER THE LEVEL B SPECIAL INSPECTION REQUIREMENTS IN SECTION 1.19 OF TMS 402-11/ACI 530-11/ASCE 5-11.

12. SPECIAL INSPECTION IS REQUIRED FOR ALL COLD-FORMED STEEL FRAMING THAT EITHER SUPPORTS VENEER WEIGHING MORE THAN 5 PSF, OR THAT EXTENDS MORE THAN 30 FEET ABOVE GRADE. INSPECTION SHALL VERIFY THE FASTENING OF THE SYSTEM.

13. PERFORM THE FOLLOWING INSPECTIONS ON THE SLABS-ON-GRADE:
    - A. PERFORM MICROWAVE TEST (AASHTO T-318, WATER CONTENT OF FRESHLY MIXED CONCRETE USING MICROWAVE OVEN) ON SITE TO VERIFY WATER/CEMENT RATIO OF FIRST LOAD OF CONCRETE, FOR EACH CONCRETE PLACEMENT. ADDITIONAL TESTS TO BE PERFORMED EVERY 25 CUBIC YARDS.
    - B. MOISTURE CONTENT TESTING (PER ASTM D2974) TO BE PERFORMED ON GRANULAR MATERIAL OVERLYING VAPOR RETARDER (TWO MINIMUM). TEST SHALL BE PERFORMED WITHIN 24 HOURS PRIOR TO CONCRETE PLACEMENT.
    - C. PERFORM AIR, SLUMP, AND TEMPERATURE TESTS OF FRESH CONCRETE;
    - D. VERIFICATION OF PLACEMENT OF VAPOR RETARDER AND TRIMABLE, COMPACTABLE GRANULAR COARSE; VAPOR RETARDER INSTALLATION MUST BE PERFORMED IN ACCORDANCE WITH INDUSTRY STANDARDS;
    - E. REVIEW BATCH TICKETS TO DETARMINE AMOUNT OF WATER IN EACH LOAD OF CONCRETE;
    - F. VERIFY TYPE AND QUANTITY OF PLASTICIZER;

ARCHITECT:

COLE ARCHITECTS
COLE ARCHITECTS | 802 W. BANNOCK SUIT 208
Boise, ID 83702 | (208) 345-1800

TCA
architecture • planning
TCA | 6211 Roosevelt Way NE
Seattle, WA 98115 | (206) 522-3820

STAMP:

NOT FOR CONSTRUCTION

CONSULTANT:

kpff
412 E. Parkcenter Blvd, Suite 204
Boise, ID 83706
O: 208.336.6985
www.kpff.com

PROJECT INFORMATION:

City of Boise Fire Station 4

8485 W. Ustick Rd, Boise, ID 83704

REVISIONS:

MARK	DATE	DESCRIPTION

PROJECT PHASE	75% CD
PROJECT NUMBER	114747.01
PROJECT MANAGER	J. Chatfield
PROJECT ARCHITECT	J. Chatfield
DESIGN	J. Chatfield
DRAWN BY	NLP

SHEET NAME:

GENERAL STRUCTURAL NOTES

SHEET NUMBER:

S003

11.09.15

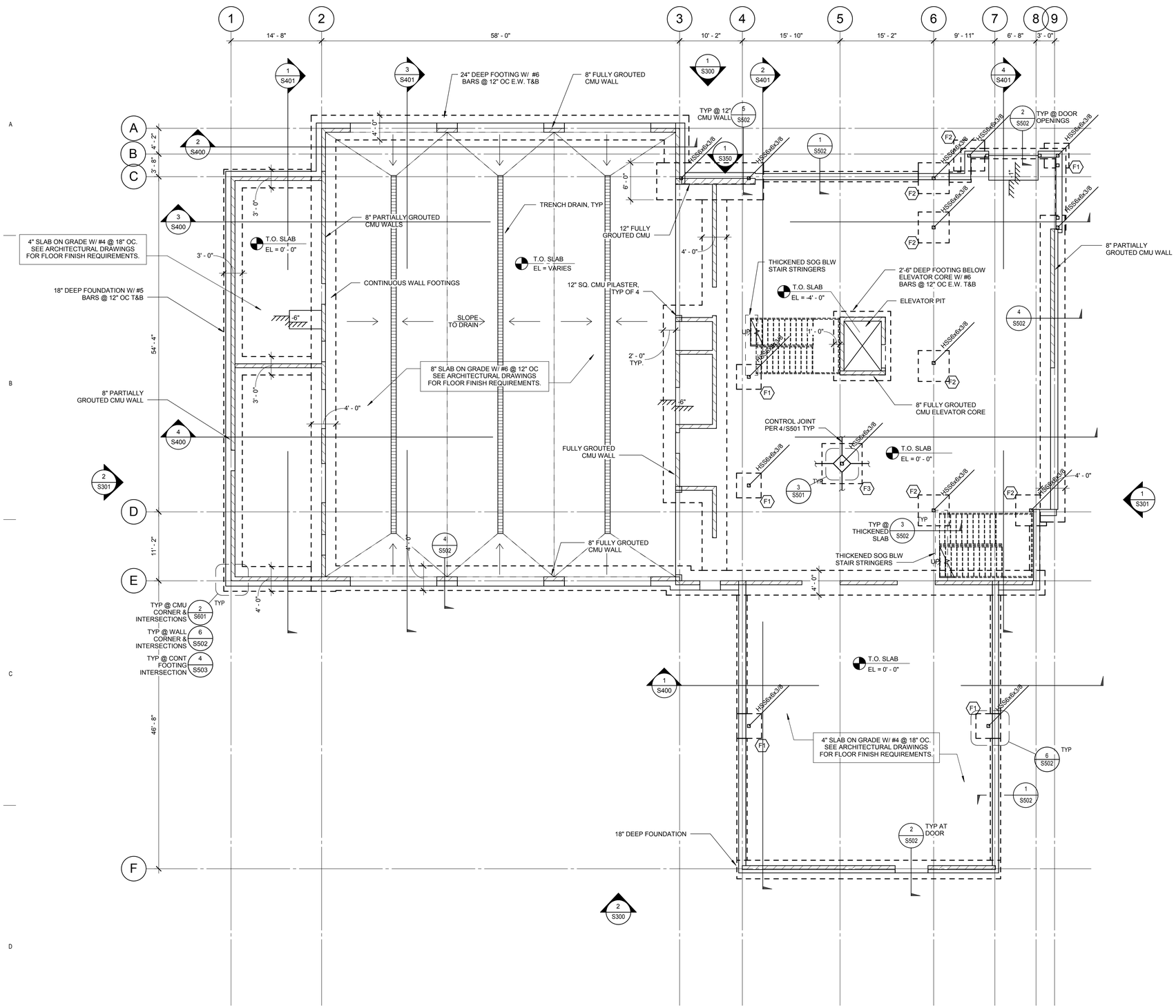

1 FOUNDATION PLAN

SCALE : 1/8" = 1'-0"

FOUNDATION NOTES:

1. SEE ARCH FOR GRID DIMENSIONS & HORIZONTAL CONTROL.
2. SEE SHEET S001 AND S002 FOR GENERAL NOTES.
3. SEE S401 SERIES SHEETS FOR TYPICAL CONCRETE DETAILS.
4. T.O.F. EL=X'-XX" — INDICATES TOP OF FOOTINGS ELEVATION. FOOTINGS SHALL BE 1'-0" BELOW TOP OF CONCRETE SLAB ELEVATION U.N.O.
6. F# — INDICATES FOOTING TYPE PER DETAIL 1/S501.
7. EL =X'-XX" — INDICATES TOP OF STRUCTURAL CONCRETE ELEVATION.
8. -XX" — INDICATES STEP IN SLAB, SEE 3/S503.
9. INDICATES NEW CMU BEARING WALL PER 1/S601.
10. SEE M.E.P. DRAWINGS FOR LOCATION OF TRENCHES, FLOOR SINKS, AND UNDERGROUND UTILITIES.
11. GEOTECHNICAL ENGINEER SHALL OBSERVE THE FOUNDATION EXCAVATIONS PRIOR TO THE PLACEMENT OF REINFORCING STEEL.
12. INDICATES STEPPED FOOTING, SEE 2/S503
13. COORDINATE WITH MECHANICAL, ELECTRICAL, AND PLUMBING DRAWINGS FOR ALL UNDER-SLAB UTILITY LOCATIONS. WHERE UTILITES CROSS FOUNDATIONS SEE 8/S501
14. CONTRACTOR TO VERIFY THAT BOTTOM OF NEW FOOTINGS ALIGNS WITH OR IS ABOVE THE BOTTOM OF ALL ADJACENT FOOTINGS.
15. WHERE OPENINGS ARE REQUIRED IN SLAB-ON-GRADE SEE 7/S501
16. FOR TYPICAL SLAB-ON-GRADE CONTROL JOINT AND COLUMN ISOLATION JOISTS SEE 4/S501 AND 3/S501
17. FOR COLUMN BASE PLATE INFO SEE 2/S701
18. FOR TYPICAL VAPOR BARRIER & BASE PREPARATION AT SLAB-ON-GRADE SEE 1/S503
19. SEE FOUNDATION SECTION OF GENERAL NOTES FOR SUBGRADE PREPARATION BELOW SLAB-ON-GRADE AND FOUNDATIONS.

ARCHITECT:

COLE ARCHITECTS

COLE ARCHITECTS | 802 W. BANNOCK SUIT 208
Boise, ID 83702 | (208) 345-1800

TCA architecture • planning

TCA | 6211 Roosevelt Way NE
Seattle, WA 98115 | (206) 522-3820

STAMP:

NOT FOR CONSTRUCTION

CONSULTANT:

kpff

412 E. Parkcenter Blvd, Suite 204
Boise, ID 83706
O: 208.336.6985
www.kpff.com

PROJECT INFORMATION:

City of Boise Fire Station 4

8485 W. Ustick Rd, Boise, ID 83704

REVISIONS:

MARK	DATE	DESCRIPTION

PROJECT PHASE	75% CD
PROJECT NUMBER	114747.01
PROJECT MANAGER	J. Chatfield
PROJECT ARCHITECT	J. Chatfield
DESIGN	J. Chatfield
DRAWN BY	Author

SHEET NAME:

FOUNDATION PLAN

SHEET NUMBER:

S201

11.09.15

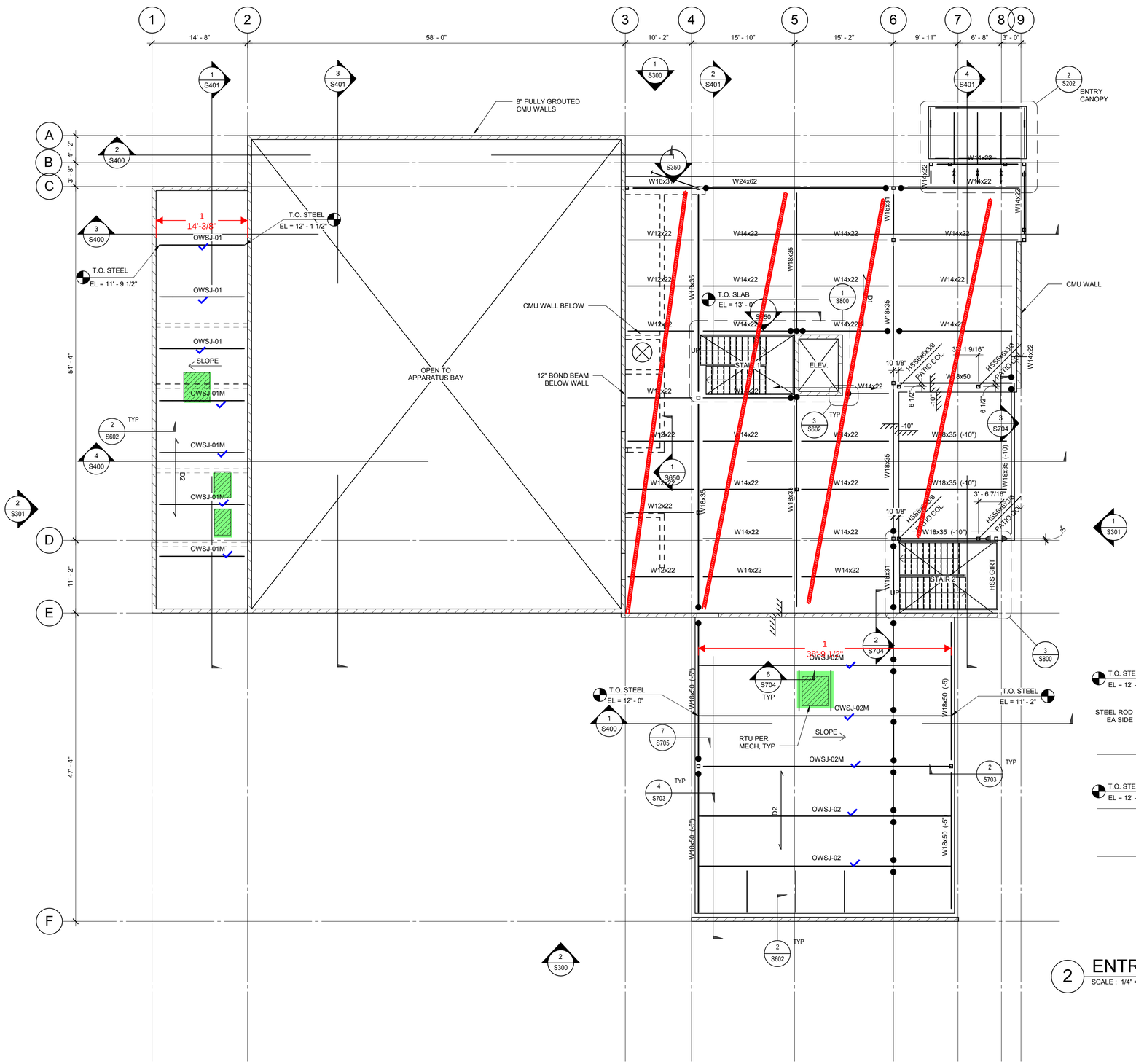

1 FRAMING PLAN - LEVEL 2

SCALE : 1/8" = 1'-0"

TYPICAL STEEL FRAMING NOTES:

1. SEE ARCH SHEETS FOR GRID DIMENSIONS & HORIZONTAL CONTROL.
2. SEE S000 SHEET SERIES FOR GENERAL NOTES.
   SEE S501 SHEET SERIES FOR TYPICAL CMU DETAILS.
   SEE S601 SHEET SERIES FOR TYPICAL STEEL DETAILS.
3. ALL BEAMS SHALL BE EQUALLY SPACED BETWEEN COLUMNS UNLESS NOTED OTHERWISE.
4. BEAMS AROUND OPENING ARE 1'-0" FROM EDGE OF OPENING, UNO. BEAMS AT EDGE OF SLAB ARE LOCATED AT 1'-0" FROM EDGE OF SLAB UNO.
5. T.O.SLAB EL = =X'-X" — INDICATES TOP OF SLAB OR DECK ELEVATION
6. (-/+X") — INDICATES TOP OF STEEL BEAM RELATIVE THE REFERENCED T.O.STEEL ELEVATION.
7. X" — INDICATES FLOOR ELEVATION CHANGE.
8. D-1 — INDICATES DECK TYPE. SEE DETAIL
9. [XX] — INDICATES NUMBER OF REQUIRED HEADED STUDS PER
10. <X-Y> — INDICATES UPWARD BEAM CAMBER AT MIDSPAN.
11. INDICATES DRAG CONNECTION SEE SCHEDULE ON DETAIL 1 / S702 FOR OWSJ SEE 5 / S703
12. INDICATES FULL HEIGHT STIFFENER PER DETAIL B ON 1 / S701
13. INDICATES MOMENT CONNECTION SEE DETAILS 2 / S702
14. INDICATES BEAM LATERAL BRACE PER DETAIL 1 / S704
15. LFRS — INDICATES LATERAL FORCE RESISTING SYSTEM MEMBERS.
16. FOR TYPICAL REINFORCING AT STRUCTURAL CMU WALLS SEE 1 / S601
17. ##LH INDICATES OPEN WEB STEEL JOIST BY CONTRACTOR. SEE GENERAL NOTES FOR LOAD CRITERIA AND DESIGN REQUIREMENTS.

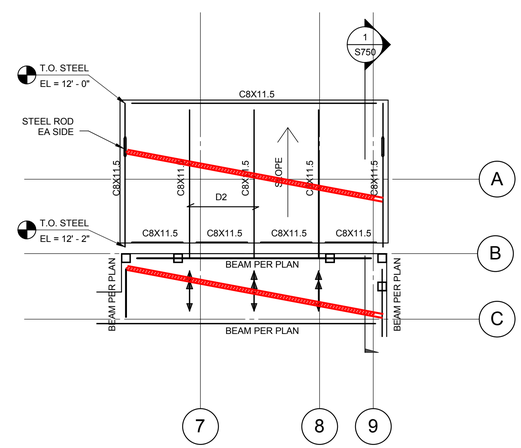

2 ENTRY CANOPY

SCALE : 1/4" = 1'-0"

ARCHITECT:

COLE ARCHITECTS

COLE ARCHITECTS | 802 W. BANNOCK SUIT 208
Boise, ID 83702 | (208) 345-1800

TCA architecture • planning

TCA | 6211 Roosevelt Way NE
Seattle, WA 98115 | (206) 522-3820

STAMP:

NOT FOR CONSTRUCTION

CONSULTANT:

kpff

412 E. Parkcenter Blvd, Suite 204
Boise, ID 83706
O: 208.336.6985
www.kpff.com

PROJECT INFORMATION:

BOISE CITY OF TREES

BOISE FIRE Est. 1890 DEDICATION

City of Boise Fire Station 4

8485 W. Ustick Rd, Boise, ID 83704

REVISIONS:

MARK	DATE	DESCRIPTION

PROJECT PHASE	75% CD
PROJECT NUMBER	114747.01
PROJECT MANAGER	J. Chatfield
PROJECT ARCHITECT	J. Chatfield
DESIGN	J. Chatfield
DRAWN BY	Author

SHEET NAME:

LEVEL 2 FRAMING PLAN

SHEET NUMBER:

S202

11.09.15

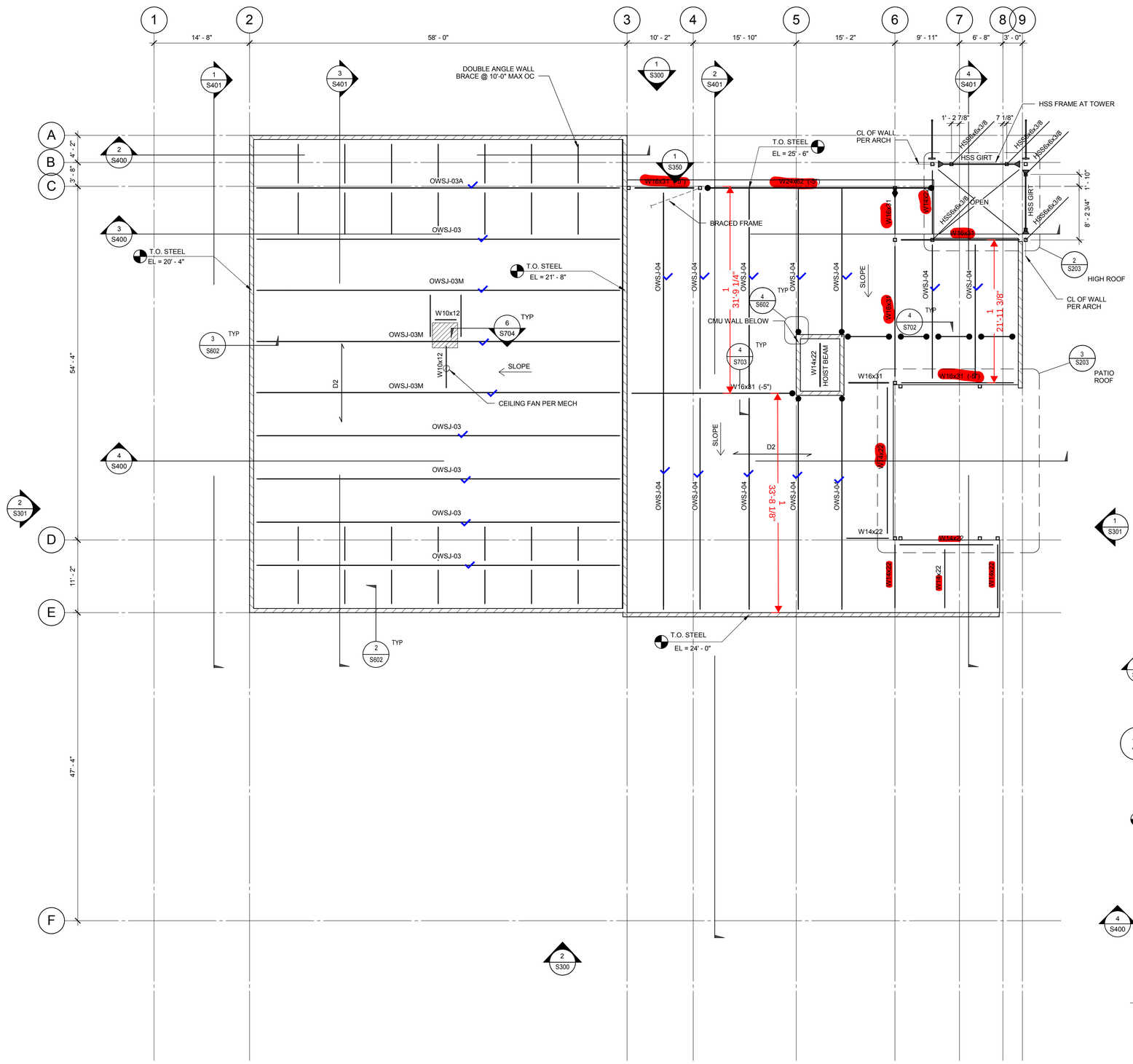

1 FRAMING PLAN - ROOF
SCALE : 1/8" = 1'-0"

TYPICAL STEEL FRAMING NOTES:

1. SEE ARCH SHEETS FOR GRID DIMENSIONS & HORIZONTAL CONTROL.
2. SEE S000 SHEET SERIES FOR GENERAL NOTES.
   SEE S501 SHEET SERIES FOR TYPICAL CMU DETAILS.
   SEE S601 SHEET SERIES FOR TYPICAL STEEL DETAILS.
3. ALL BEAMS SHALL BE EQUALLY SPACED BETWEEN COLUMNS UNLESS NOTED OTHERWISE.
4. BEAMS AROUND OPENING ARE 1'-0" FROM EDGE OF OPENING, UNO. BEAMS AT EDGE OF SLAB ARE LOCATED AT 1'-0" FROM EDGE OF SLAB UNO.
5. T.O.SLAB EL = =X'-X" — INDICATES TOP OF SLAB OR DECK ELEVATION
6. (-/+X") — INDICATES TOP OF STEEL BEAM RELATIVE THE REFERENCED T.O.STEEL ELEVATION.
7. -X" — INDICATES FLOOR ELEVATION CHANGE.
8. D-1 — INDICATES DECK TYPE. SEE DETAIL
9. [XX] — INDICATES NUMBER OF REQUIRED HEADED STUDS PER
10. <X-Y> — INDICATES UPWARD BEAM CAMBER AT MIDSPAN.
11. INDICATES DRAG CONNECTION SEE SCHEDULE ON DETAIL 1 / S702 FOR OWSJ SEE 5 / S703
12. INDICATES FULL HEIGHT STIFFENER PER DETAIL B ON 1 / S701
13. INDICATES MOMENT CONNECTION SEE DETAILS 2 / S702
14. INDICATES BEAM LATERAL BRACE PER DETAIL 1 / S704
15. LFRS — INDICATES LATERAL FORCE RESISTING SYSTEM MEMBERS.
16. FOR TYPICAL REINFORCING AT STRUCTURAL CMU WALLS SEE 1 / S601
17. ##LH INDICATES OPEN WEB STEEL JOIST BY CONTRACTOR. SEE GENERAL NOTES FOR LOAD CRITERIA AND DESIGN REQUIREMENTS.

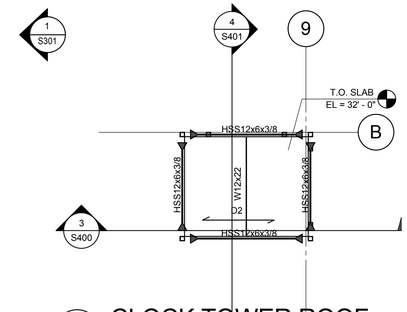

2 CLOCK TOWER ROOF
SCALE : 1/8" = 1'-0"

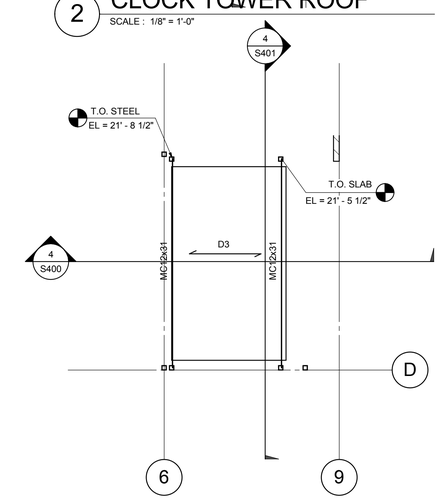

3 PATIO ROOF FRAMING
SCALE : 1/8" = 1'-0"

ARCHITECT:

COLE ARCHITECTS
COLE ARCHITECTS | 802 W. BANNOCK SUIT 208
Boise, ID 83702 | (208) 345-1800

TCA architecture • planning
TCA | 6211 Roosevelt Way NE
Seattle, WA 98115 | (206) 522-3820

STAMP:

NOT FOR CONSTRUCTION

CONSULTANT:

kpff
412 E. Parkcenter Blvd, Suite 204
Boise, ID 83706
O: 208.336.6985
www.kpff.com

PROJECT INFORMATION:

City of Boise Fire Station 4
8485 W. Ustick Rd, Boise, ID 83704

REVISIONS:

MARK	DATE	DESCRIPTION

PROJECT PHASE	75% CD
PROJECT NUMBER	114747.01
PROJECT MANAGER	J. Chatfield
PROJECT ARCHITECT	J. Chatfield
DESIGN	J. Chatfield
DRAWN BY	Author

SHEET NAME:

ROOF FRAMING PLAN

SHEET NUMBER:

S203

11.09.15

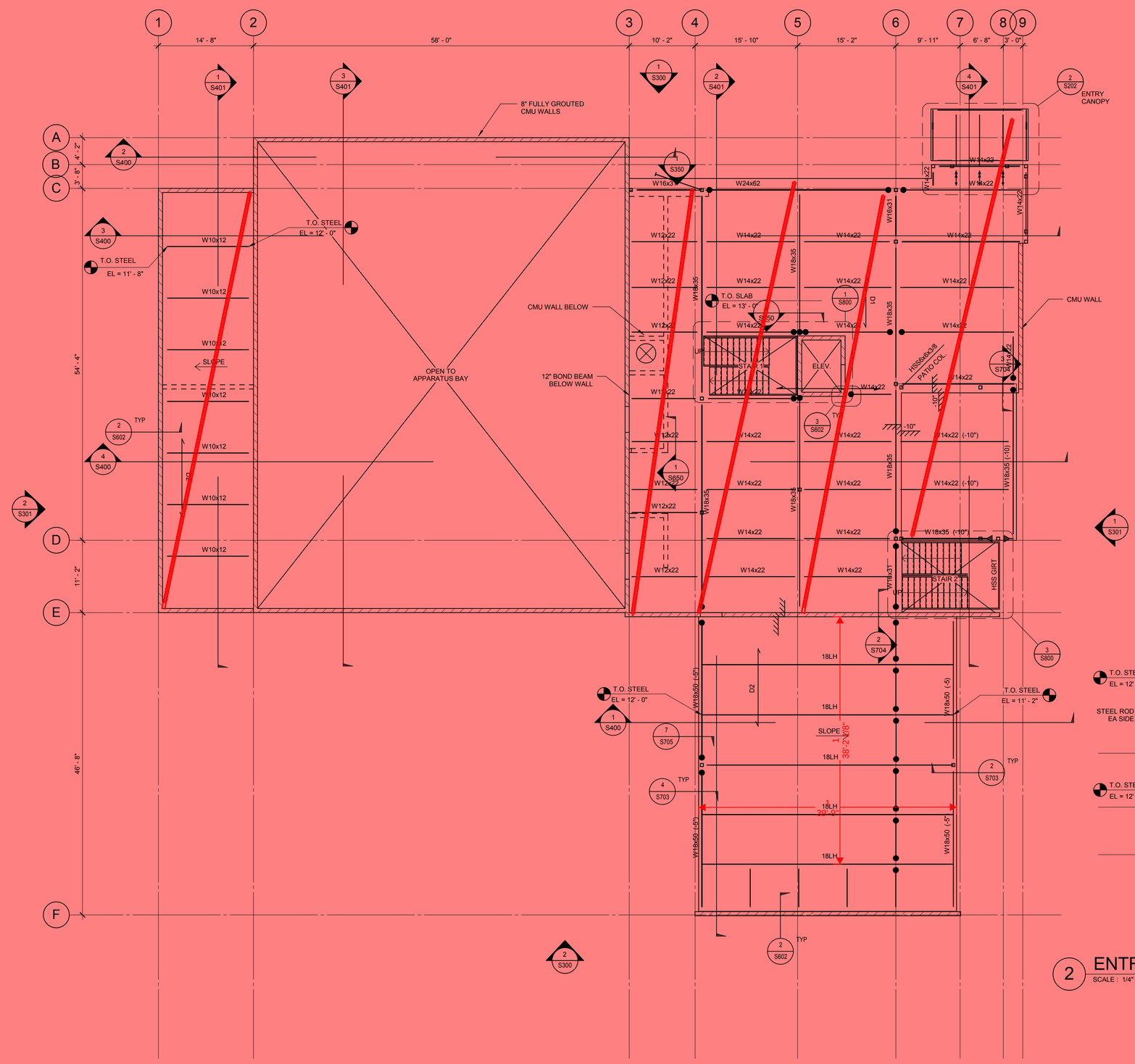

1 FRAMING PLAN - LEVEL 2

SCALE : 1/8" = 1'-0"

TYPICAL STEEL FRAMING NOTES:

1. SEE ARCH SHEETS FOR GRID DIMENSIONS & HORIZONTAL CONTROL.
2. SEE S000 SHEET SERIES FOR GENERAL NOTES.
   SEE S501 SHEET SERIES FOR TYPICAL CMU DETAILS.
   SEE S601 SHEET SERIES FOR TYPICAL STEEL DETAILS.
3. ALL BEAMS SHALL BE EQUALLY SPACED BETWEEN COLUMNS UNLESS NOTED OTHERWISE.
4. BEAMS AROUND OPENING ARE 1'-0" FROM EDGE OF OPENING, UNO. BEAMS AT EDGE OF SLAB ARE LOCATED AT 1'-0" FROM EDGE OF SLAB UNO.
5. T.O.SLAB EL = =X'-X" — INDICATES TOP OF SLAB OR DECK ELEVATION
6. (-/+X") — INDICATES TOP OF STEEL BEAM RELATIVE THE REFERENCED T.O.STEEL ELEVATION.
7. X" — INDICATES FLOOR ELEVATION CHANGE.
8. D-1 — INDICATES DECK TYPE. SEE DETAIL
9. [XX] — INDICATES NUMBER OF REQUIRED HEADED STUDS PER
10. <X-Y> — INDICATES UPWARD BEAM CAMBER AT MIDSPAN.
11. INDICATES DRAG CONNECTION SEE SCHEDULE ON DETAIL 1 / S702 FOR OWSJ SEE 5 / S703
12. INDICATES FULL HEIGHT STIFFENER PER DETAIL B ON 1 / S701
13. INDICATES MOMENT CONNECTION SEE DETAILS 2 / S702
14. INDICATES BEAM LATERAL BRACE PER DETAIL 1 / S704
15. LFRS — INDICATES LATERAL FORCE RESISTING SYSTEM MEMBERS.
16. FOR TYPICAL REINFORCING AT STRUCTURAL CMU WALLS SEE 1 / S601
17. ##LH INDICATES OPEN WEB STEEL JOIST BY CONTRACTOR. SEE GENERAL NOTES FOR LOAD CRITERIA AND DESIGN REQUIREMENTS.

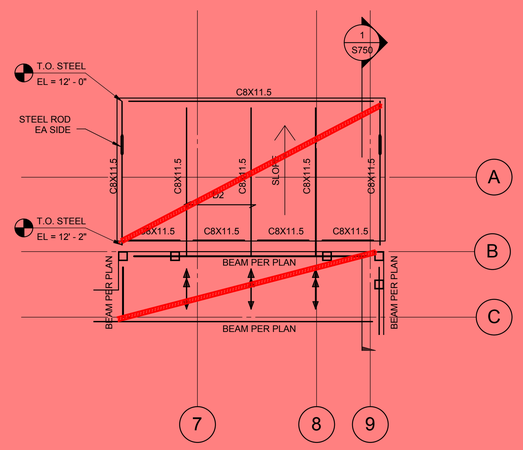

2 ENTRY CANOPY

SCALE : 1/4" = 1'-0"

ARCHITECT:

COLE ARCHITECTS

COLE ARCHITECTS | 802 W. BANNOCK SUIT 208
Boise, ID 83702 | (208) 345-1800

TCA architecture • planning

TCA | 6211 Roosevelt Way NE
Seattle, WA 98115 | (206) 522-3820

STAMP:

NOT FOR CONSTRUCTION

CONSULTANT:

kpff

412 E. Parkcenter Blvd, Suite 204
Boise, ID 83706
O: 208.336.6985
www.kpff.com

PROJECT INFORMATION:

BOISE CITY OF TREES

BOISE FIRE DEDICATION

City of Boise Fire Station 4

8485 W. Ustick Rd, Boise, ID 83704

REVISIONS:

MARK	DATE	DESCRIPTION

PROJECT PHASE	75% CD
PROJECT NUMBER	114747.01
PROJECT MANAGER	J. Chatfield
PROJECT ARCHITECT	J. Chatfield
DESIGN	J. Chatfield
DRAWN BY	Author

SHEET NAME:

LEVEL 2 FRAMING PLAN

SHEET NUMBER:

S202

11.09.15

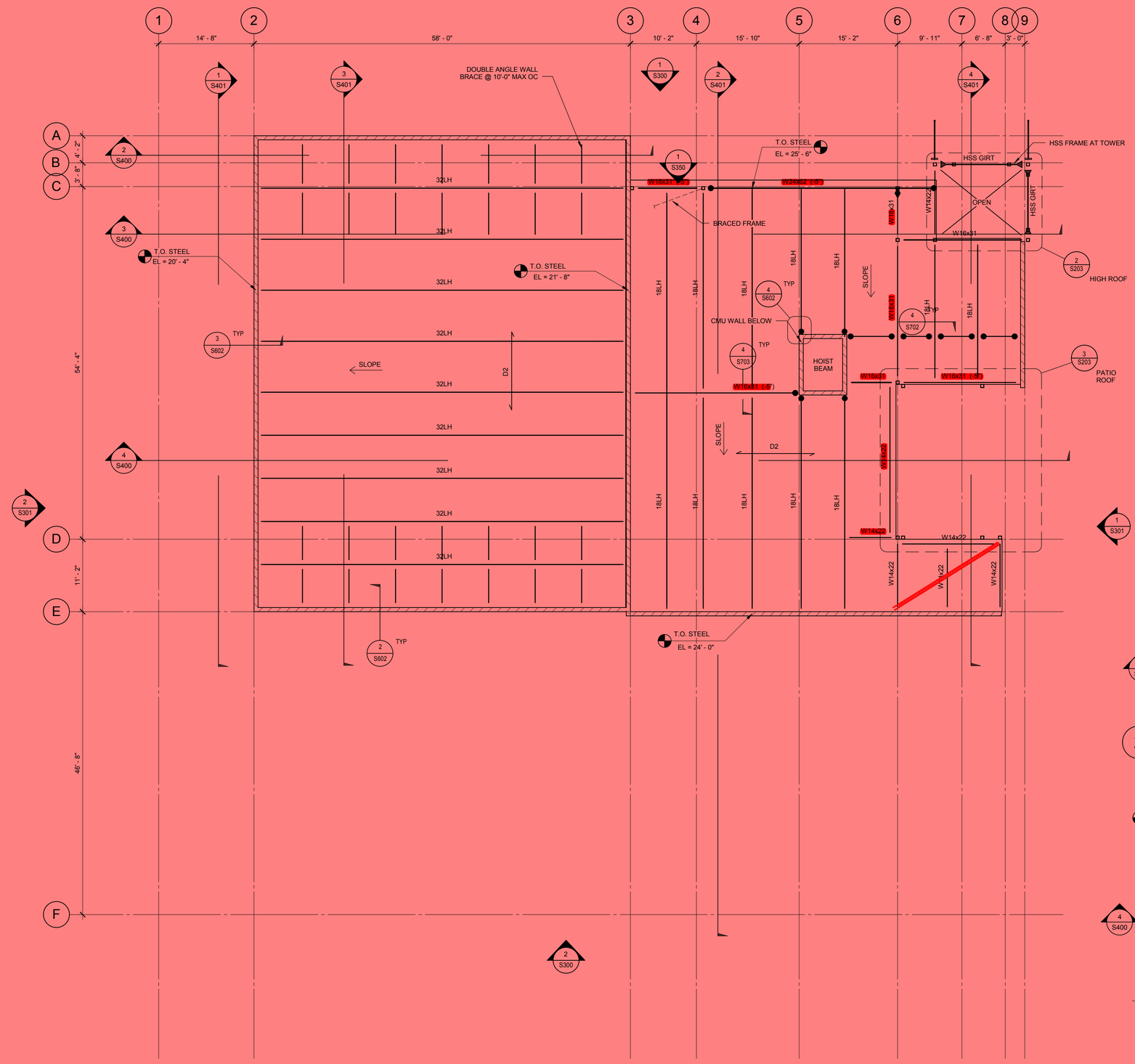

1 FRAMING PLAN - ROOF
SCALE : 1/8" = 1'-0"

TYPICAL STEEL FRAMING NOTES:

1. SEE ARCH SHEETS FOR GRID DIMENSIONS & HORIZONTAL CONTROL.
2. SEE S000 SHEET SERIES FOR GENERAL NOTES.
   SEE S501 SHEET SERIES FOR TYPICAL CMU DETAILS.
   SEE S601 SHEET SERIES FOR TYPICAL STEEL DETAILS.
3. ALL BEAMS SHALL BE EQUALLY SPACED BETWEEN COLUMNS UNLESS NOTED OTHERWISE.
4. BEAMS AROUND OPENING ARE 1'-0" FROM EDGE OF OPENING, UNO. BEAMS AT EDGE OF SLAB ARE LOCATED AT 1'-0" FROM EDGE OF SLAB UNO.
5. T.O.SLAB EL = =X'-X" — INDICATES TOP OF SLAB OR DECK ELEVATION
6. (-/+X") — INDICATES TOP OF STEEL BEAM RELATIVE THE REFERENCED T.O.STEEL ELEVATION.
7. X" — INDICATES FLOOR ELEVATION CHANGE.
8. D-1 — INDICATES DECK TYPE. SEE DETAIL
9. [XX] — INDICATES NUMBER OF REQUIRED HEADED STUDS PER
10. <X-Y> — INDICATES UPWARD BEAM CAMBER AT MIDSPAN.
11. INDICATES DRAG CONNECTION SEE SCHEDULE ON DETAIL 1 / S702 FOR OWSJ SEE 5 / S703
12. INDICATES FULL HEIGHT STIFFENER PER DETAIL B ON 1 / S701
13. INDICATES MOMENT CONNECTION SEE DETAILS 2 / S702
14. INDICATES BEAM LATERAL BRACE PER DETAIL 1 / S704
15. LFRS — INDICATES LATERAL FORCE RESISTING SYSTEM MEMBERS.
16. FOR TYPICAL REINFORCING AT STRUCTURAL CMU WALLS SEE 1 / S601
17. ##LH INDICATES OPEN WEB STEEL JOIST BY CONTRACTOR. SEE GENERAL NOTES FOR LOAD CRITERIA AND DESIGN REQUIREMENTS.

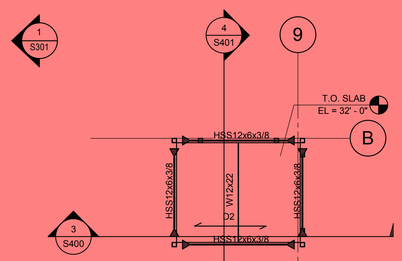

2 CLOCK TOWER ROOF
SCALE : 1/8" = 1'-0"

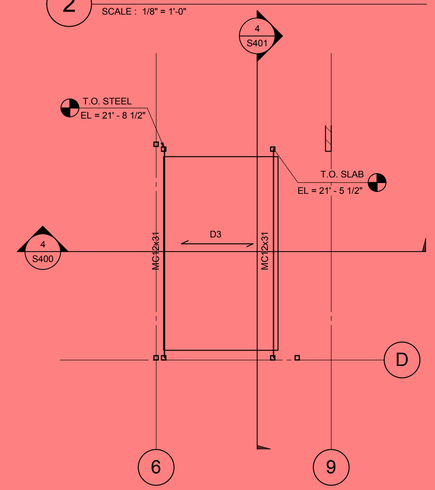

3 PATIO ROOF FRAMING
SCALE : 1/8" = 1'-0"

ARCHITECT:

COLE ARCHITECTS

COLE ARCHITECTS | 802 W. BANNOCK SUIT 208
Boise, ID 83702 | (208) 345-1800

TCA architecture • planning

TCA | 6211 Roosevelt Way NE
Seattle, WA 98115 | (206) 522-3820

STAMP:

NOT FOR CONSTRUCTION

CONSULTANT:

kpff

412 E. Parkcenter Blvd, Suite 204
Boise, ID 83706
O: 208.336.6985
www.kpff.com

PROJECT INFORMATION:

BOISE CITY OF TREES

BOISE FIRE Est. 1866 DEDICATION

City of Boise Fire Station 4

8485 W. Ustick Rd, Boise, ID 83704

REVISIONS:

MARK	DATE	DESCRIPTION

PROJECT PHASE	75% CD
PROJECT NUMBER	114747.01
PROJECT MANAGER	J. Chatfield
PROJECT ARCHITECT	J. Chatfield
DESIGN	J. Chatfield
DRAWN BY	Author

SHEET NAME:

ROOF FRAMING PLAN

SHEET NUMBER:

S203

11.09.15

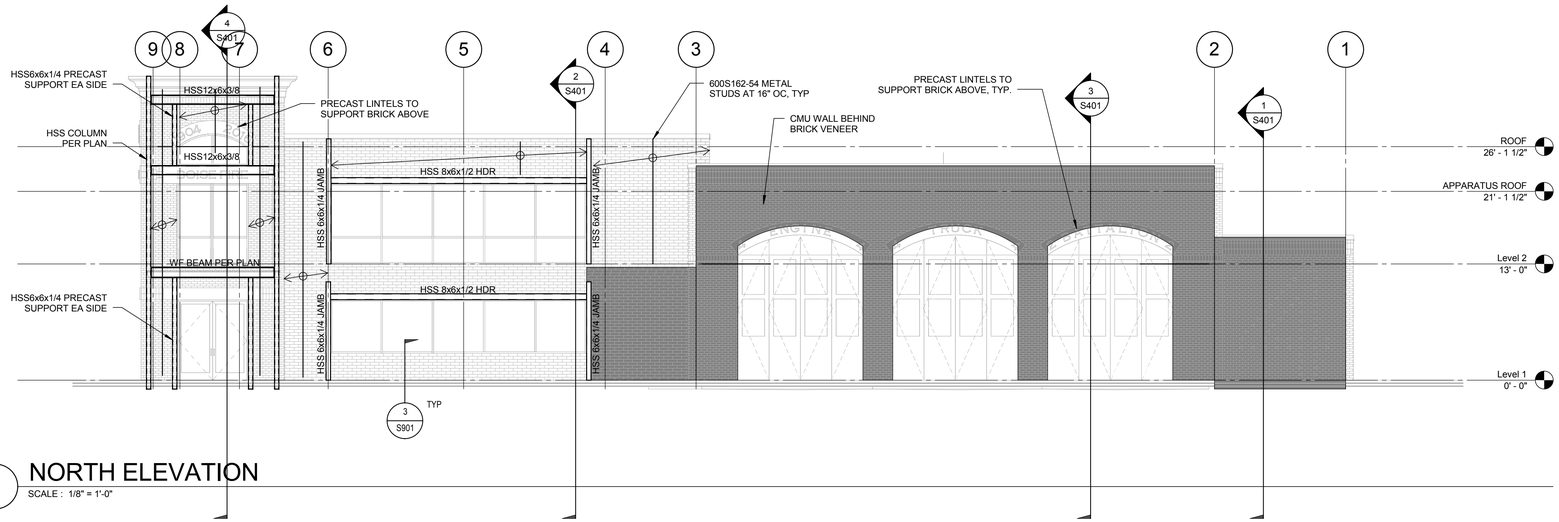

1 NORTH ELEVATION
SCALE : 1/8" = 1'-0"

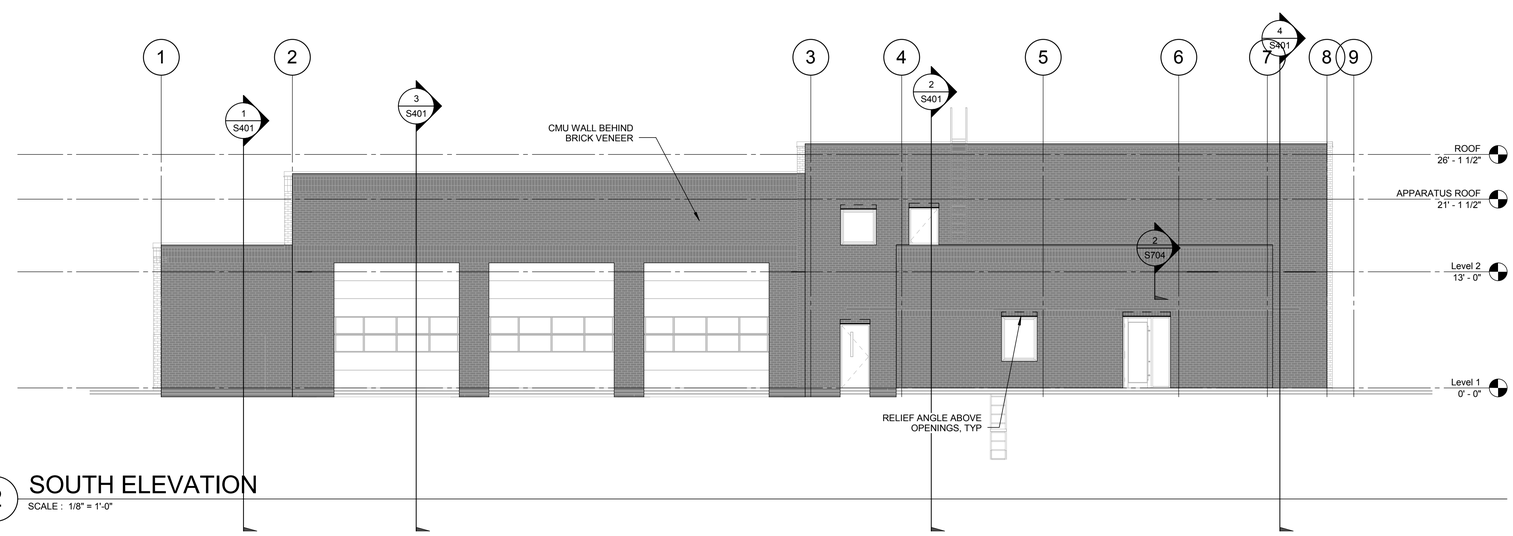

2 SOUTH ELEVATION
SCALE : 1/8" = 1'-0"

EXTERIOR WALL ELEVATION NOTES:

1. SEE ARCH DRAWINGS FOR ALL DIMENSIONS AND EXTERIOR FINISH MATERIALS.
2. SEE WALL SECTIONS FOR SIZE AND LOCATION OF CMU AND BRICK LEDGER SUPPORT ANGLE.
3. TOP OF PARAPET ELEVATION PER THE ARCH DRAWINGS.
4. SEE "COLD FORMED STEEL" ON SHEET S002 FOR METAL STUD INFORMATION.
5. ALL EXTERIOR METAL STUDS TO BE 600S162-54 STUDS @ 16" OC TYP, UNO.
6. SEE X/SXXX FOR TYPICAL EXTERIOR MEAL STUD WALL ELEVATION.

ARCHITECT:

COLE ARCHITECTS

COLE ARCHITECTS | 802 W. BANNOCK SUIT 208
Boise, ID 83702 | (208) 345-1800

TCA architecture • planning

TCA | 6211 Roosevelt Way NE
Seattle, WA 98115 | (206) 522-3820

STAMP:

NOT FOR CONSTRUCTION

CONSULTANT:

kpff

412 E. Parkcenter Blvd, Suite 204
Boise, ID 83706
O: 208.336.6985
www.kpff.com

PROJECT INFORMATION:

City of Boise Fire Station 4

8485 W. Ustick Rd, Boise, ID 83704

REVISIONS:

MARK	DATE	DESCRIPTION

PROJECT PHASE	75% CD
PROJECT NUMBER	114747.01
PROJECT MANAGER	J. Chatfield
PROJECT ARCHITECT	J. Chatfield
DESIGN	J. Chatfield
DRAWN BY	Author

SHEET NAME:

EXTERIOR ELEVATIONS

SHEET NUMBER:

S300

11.09.15

EXTERIOR WALL ELEVATION NOTES:

1. SEE ARCH DRAWINGS FOR ALL DIMENSIONS AND EXTERIOR FINISH MATERIALS.
2. SEE WALL SECTIONS FOR SIZE AND LOCATION OF CMU AND BRICK LEDGER SUPPORT ANGLE.
3. TOP OF PARAPET ELEVATION PER THE ARCH DRAWINGS.
4. SEE "COLD FORMED STEEL" ON SHEET S002 FOR METAL STUD INFORMATION.
5. ALL EXTERIOR METAL STUDS TO BE 600S162-54 STUDS @ 16" OC TYP, UNO.
6. SEE X/SXXX FOR TYPICAL EXTERIOR MEAL STUD WALL ELEVATION.

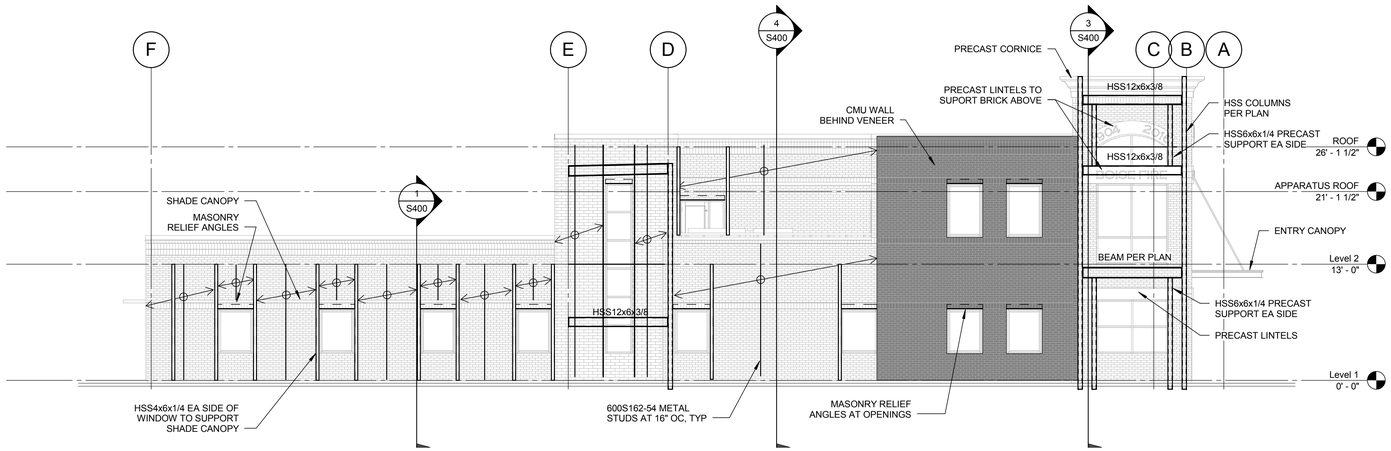

1 EAST ELEVATION
SCALE : 1/8" = 1'-0"

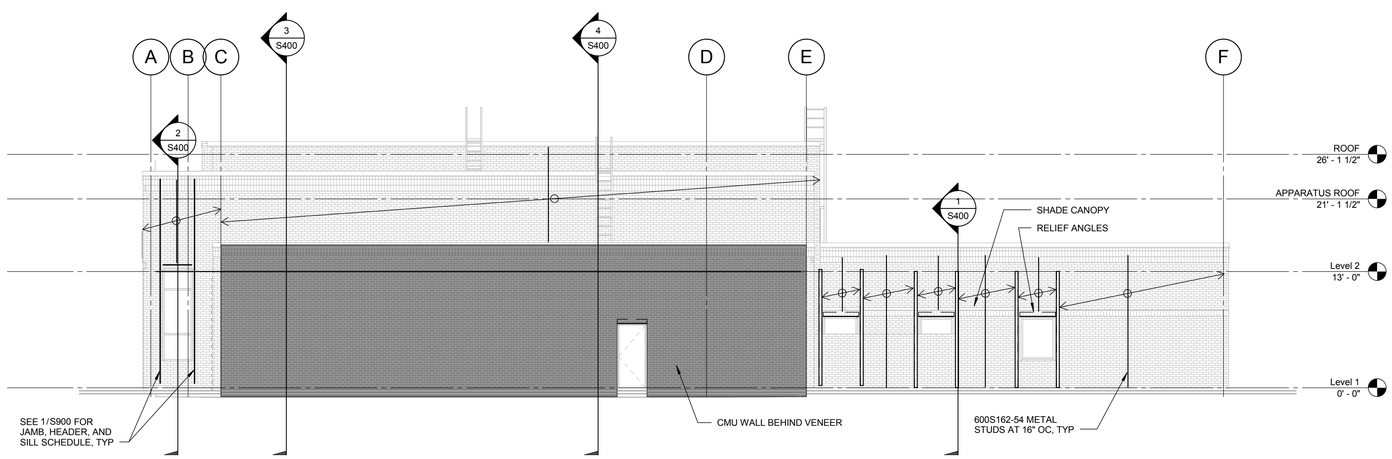

2 WEST ELEVATION
SCALE : 1/8" = 1'-0"

ARCHITECT:

COLE ARCHITECTS

COLE ARCHITECTS | 802 W. BANNOCK SUIT 208
Boise, ID 83702 | (208) 345-1800

TCA

architecture • planning

TCA | 6211 Roosevelt Way NE
Seattle, WA 98115 | (206) 522-3820

STAMP:

NOT FOR CONSTRUCTION

CONSULTANT:

kpff
412 E. Parkcenter Blvd, Suite 204
Boise, ID 83706
O: 208.336.6985
www.kpff.com

PROJECT INFORMATION:

City of Boise Fire Station 4

8485 W. Ustick Rd, Boise, ID 83704

REVISIONS:

MARK	DATE	DESCRIPTION

PROJECT PHASE	75% CD
PROJECT NUMBER	114747.01
PROJECT MANAGER	J. Chatfield
PROJECT ARCHITECT	J. Chatfield
DESIGN	J. Chatfield
DRAWN BY	Author

SHEET NAME:

EXTERIOR ELEVATIONS

SHEET NUMBER:

S301

11.09.15

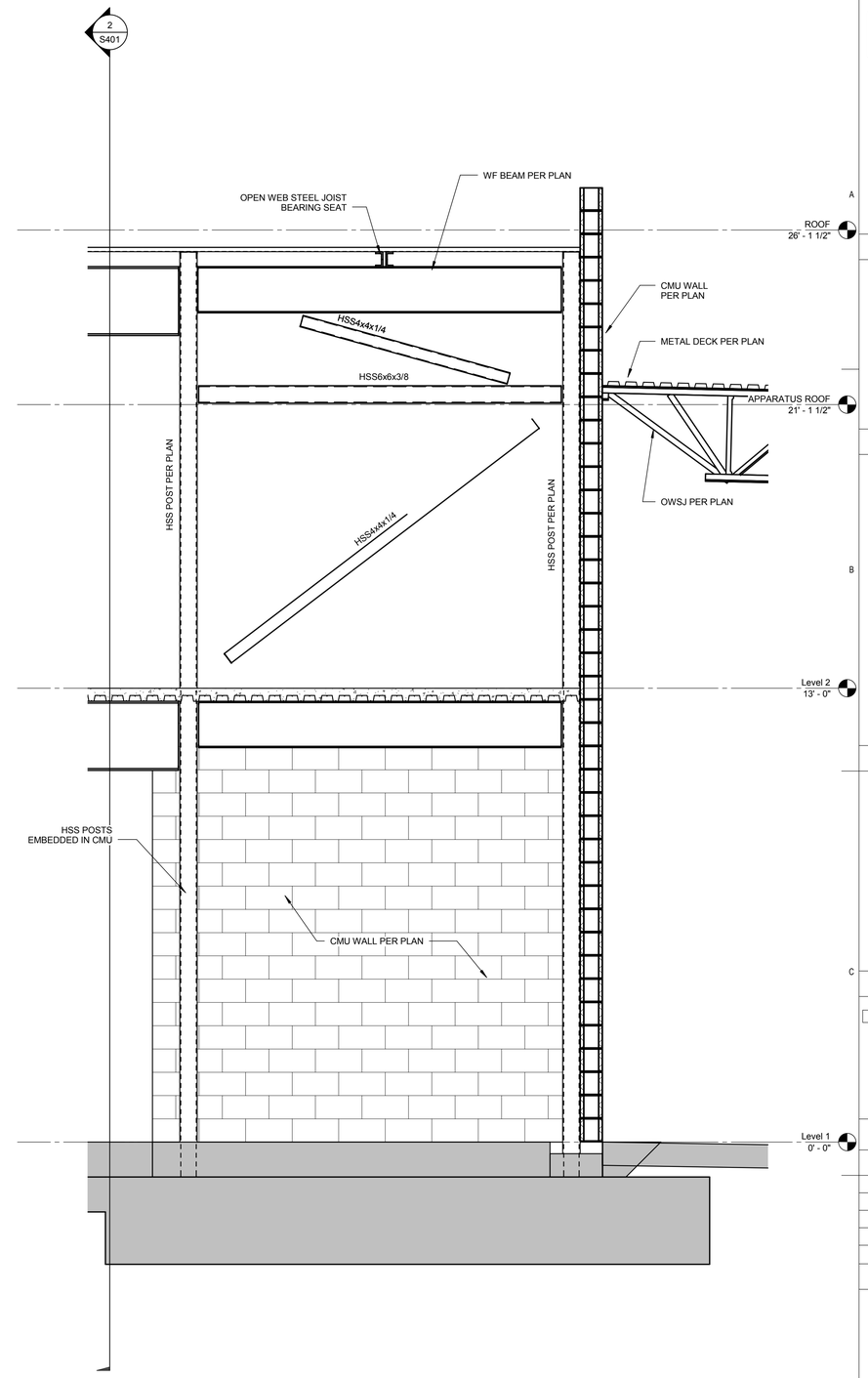

1 WALL/FRAME ELEVATION

SCALE : 1/2" = 1'-0"

ARCHITECT:

COLE ARCHITECTS

COLE ARCHITECTS | 802 W. BANNOCK SUIT 208
Boise, ID 83702 | (208) 345-1800

TCA architecture • planning

TCA | 6211 Roosevelt Way NE
Seattle, WA 98115 | (206) 522-3820

STAMP:

NOT FOR CONSTRUCTION

CONSULTANT:

kpff

412 E. Parkcenter Blvd, Suite 204
Boise, ID 83706
O: 208.336.6985
www.kpff.com

PROJECT INFORMATION:

BOISE CITY OF TREES

BOISE FIRE EST. 1891 DEDICATION

City of Boise Fire Station 4

8485 W. Ustick Rd, Boise, ID 83704

REVISIONS:

MARK	DATE	DESCRIPTION

PROJECT PHASE	75% CD
PROJECT NUMBER	114747.01
PROJECT MANAGER	J. Chatfield
PROJECT ARCHITECT	J. Chatfield
DESIGN	J. Chatfield
DRAWN BY	Author

SHEET NAME:

WALL/FRAME ELEVATIONS

SHEET NUMBER:

S350

11.09.15

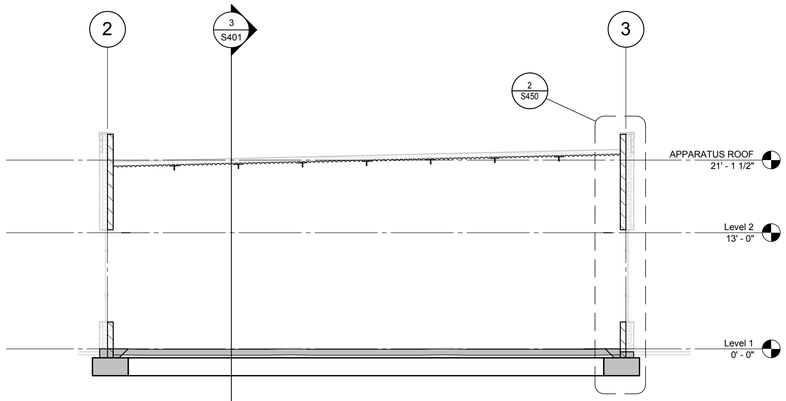

2 BUILDING SECTION
SCALE : 1/8" = 1'-0"

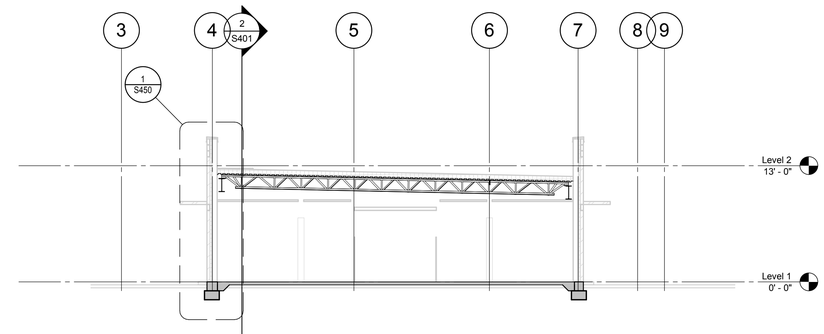

1 BUILDING SECTION
SCALE : 1/8" = 1'-0"

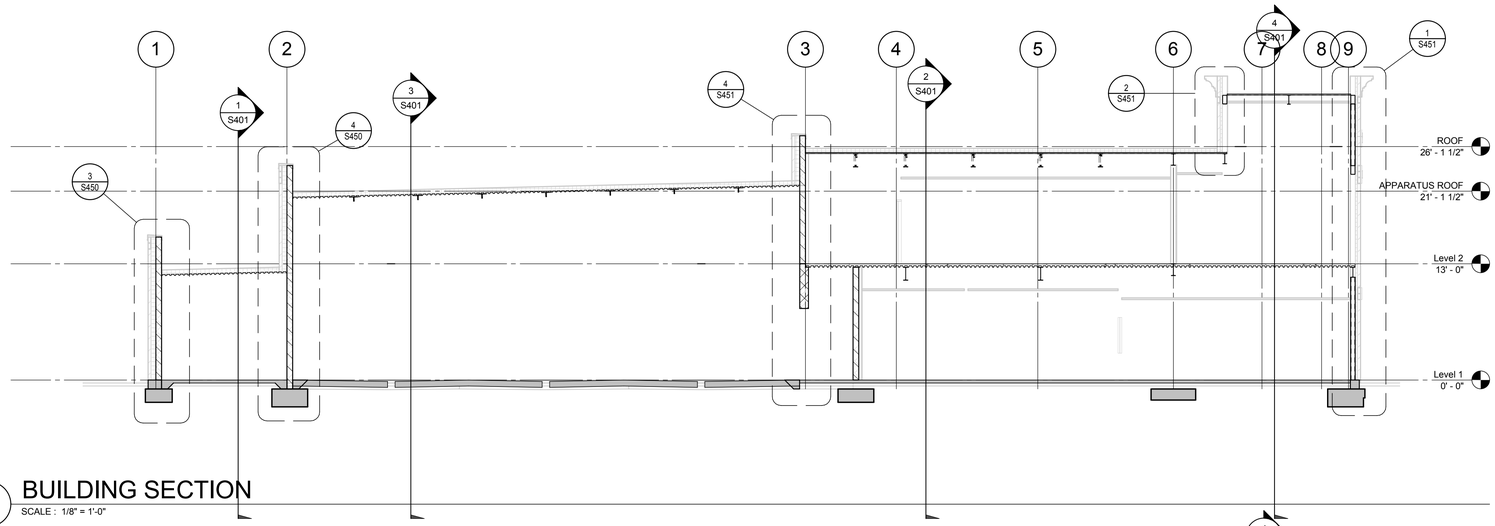

3 BUILDING SECTION
SCALE : 1/8" = 1'-0"

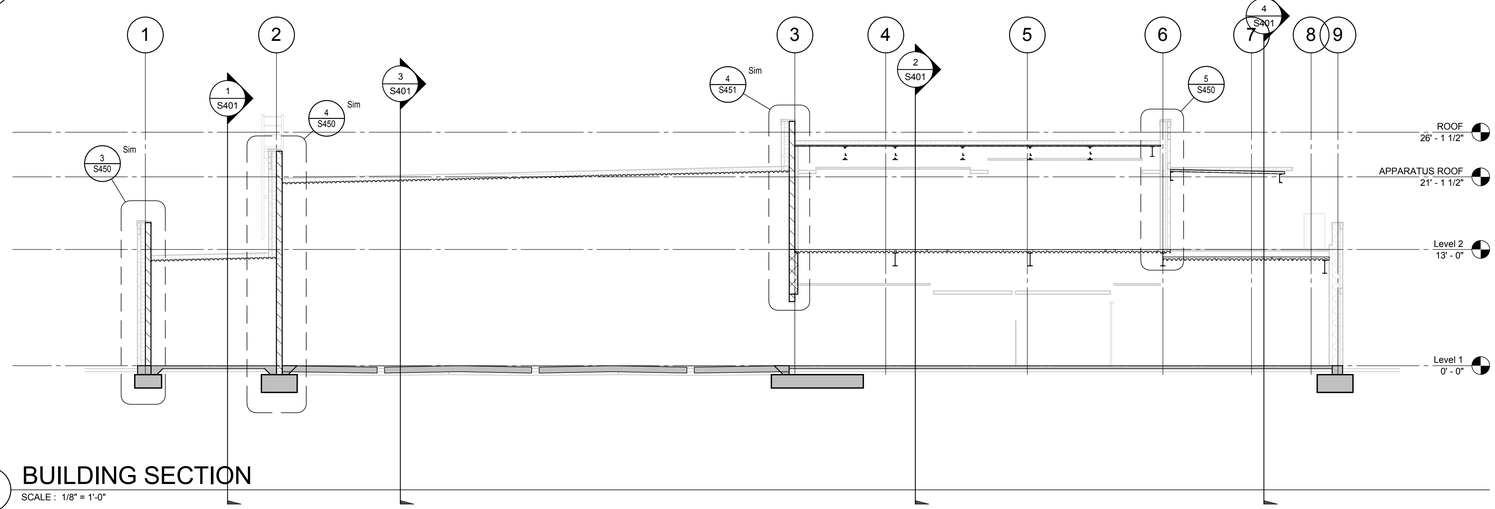

4 BUILDING SECTION
SCALE : 1/8" = 1'-0"

ARCHITECT:

COLE ARCHITECTS

COLE ARCHITECTS | 802 W. BANNOCK SUIT 208
Boise, ID 83702 | (208) 345-1800

TCA
architecture • planning

TCA | 6211 Roosevelt Way NE
Seattle, WA 98115 | (206) 522-3820

STAMP:

NOT FOR CONSTRUCTION

CONSULTANT:

kpff
412 E. Parkcenter Blvd, Suite 204
Boise, ID 83706
O: 208.336.6985
www.kpff.com

PROJECT INFORMATION:

BOISE CITY OF TREES

BOISE FIRE DEDICATION

City of Boise Fire Station 4

8485 W. Ustick Rd, Boise, ID 83704

REVISIONS:

MARK	DATE	DESCRIPTION

PROJECT PHASE	75% CD
PROJECT NUMBER	114747.01
PROJECT MANAGER	J. Chatfield
PROJECT ARCHITECT	J. Chatfield
DESIGN	J. Chatfield
DRAWN BY	Author

SHEET NAME:

BUILDING SECTIONS

SHEET NUMBER:

S400

11.09.15

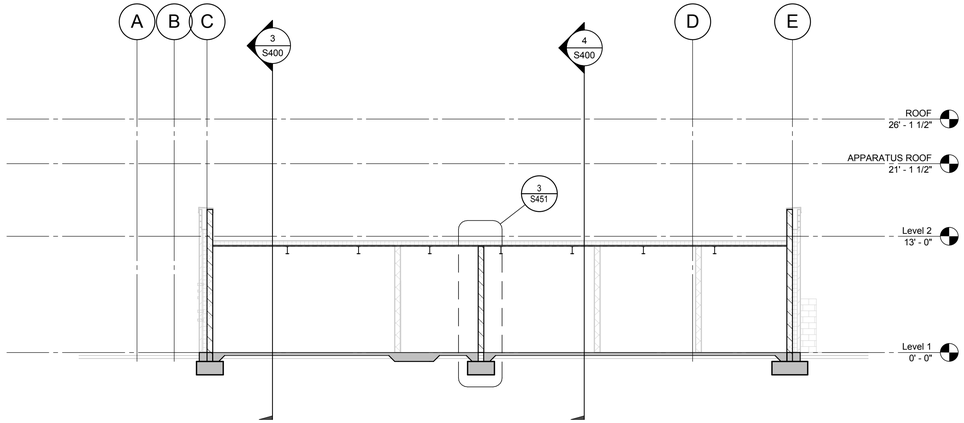

1 BUILDING SECTION

SCALE : 1/8" = 1'-0"

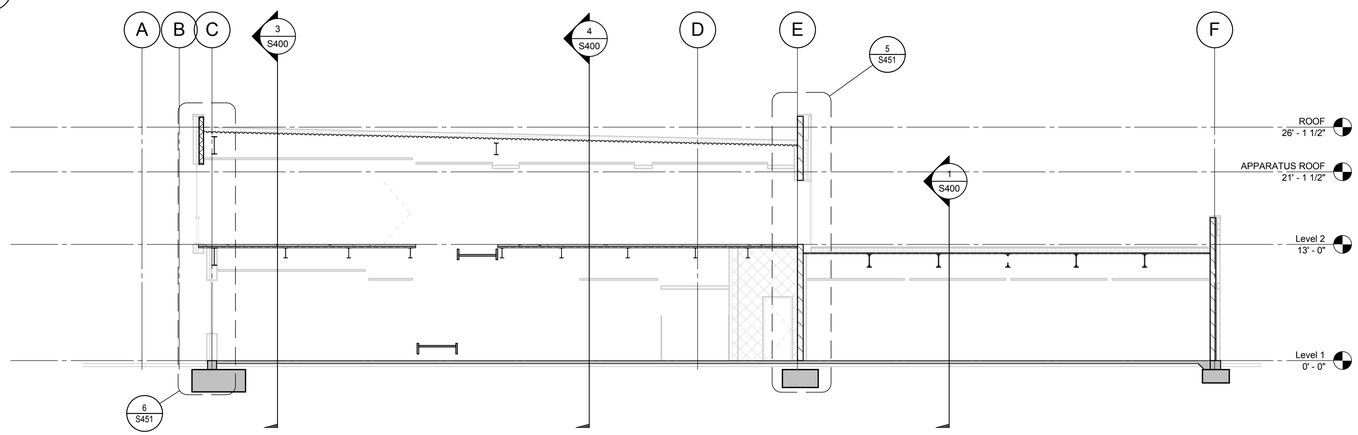

2 BUILDING SECTION

SCALE : 1/8" = 1'-0"

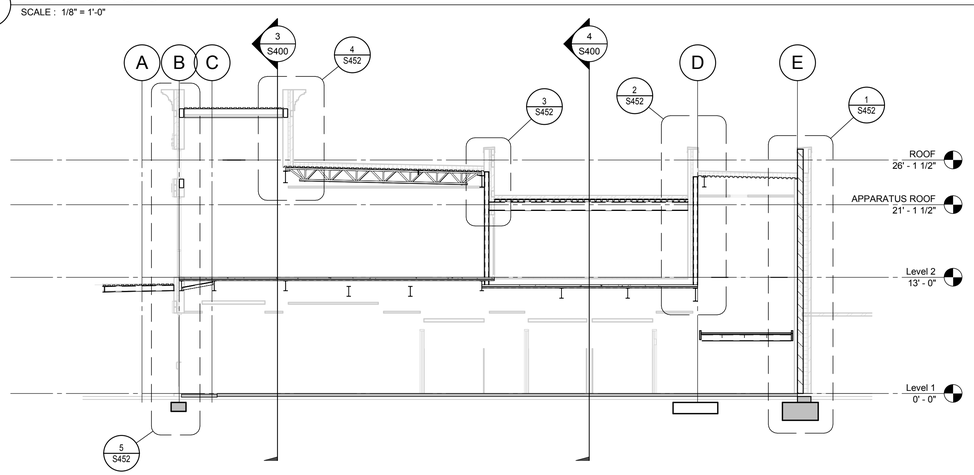

4 BUILDING SECTION

SCALE : 1/8" = 1'-0"

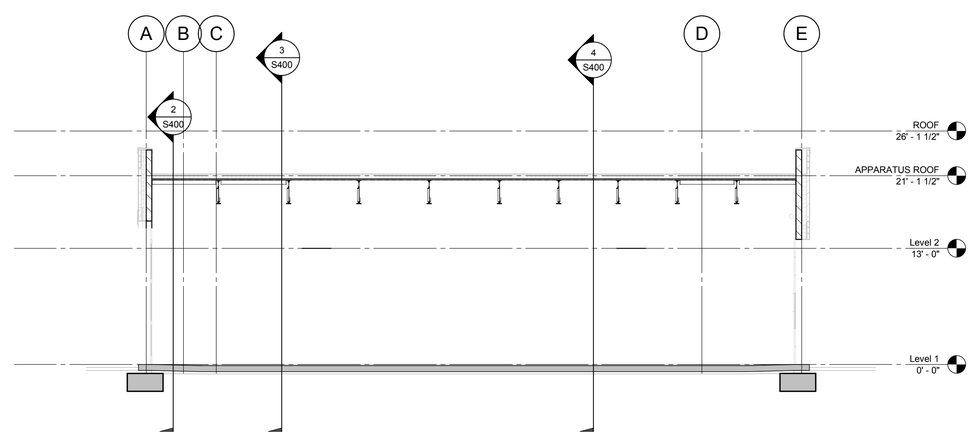

3 BUILDING SECTION

SCALE : 1/8" = 1'-0"

ARCHITECT:

COLE ARCHITECTS

COLE ARCHITECTS | 802 W. BANNOCK SUIT 208
Boise, ID 83702 | (208) 345-1800

TCA architecture • planning

TCA | 6211 Roosevelt Way NE
Seattle, WA 98115 | (206) 522-3820

STAMP:

NOT FOR CONSTRUCTION

CONSULTANT:

kpff

412 E. Parkcenter Blvd, Suite 204
Boise, ID 83706
O: 208.336.6985
www.kpff.com

PROJECT INFORMATION:

BOISE CITY OF TREES

BOISE FIRE EST. 1890 DEDICATION

City of Boise Fire Station 4

8485 W. Ustick Rd, Boise, ID 83704

REVISIONS:

MARK	DATE	DESCRIPTION

PROJECT PHASE	75% CD
PROJECT NUMBER	114747.01
PROJECT MANAGER	J. Chatfield
PROJECT ARCHITECT	J. Chatfield
DESIGN	J. Chatfield
DRAWN BY	Author

SHEET NAME:

BUILDING SECTIONS

SHEET NUMBER:

S401

11.09.15

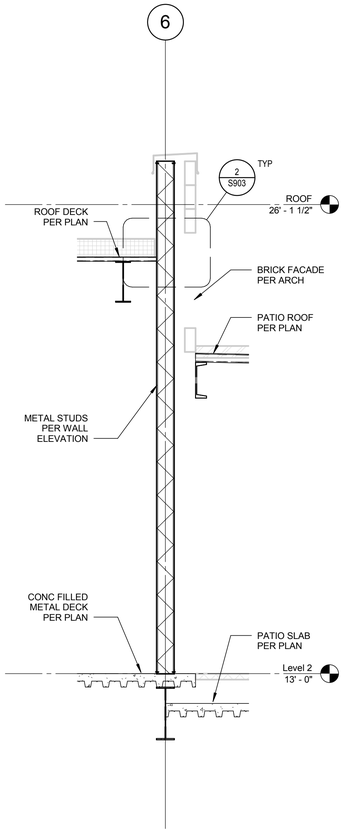

5 WALL SECTION
SCALE : 1/2" = 1'-0"

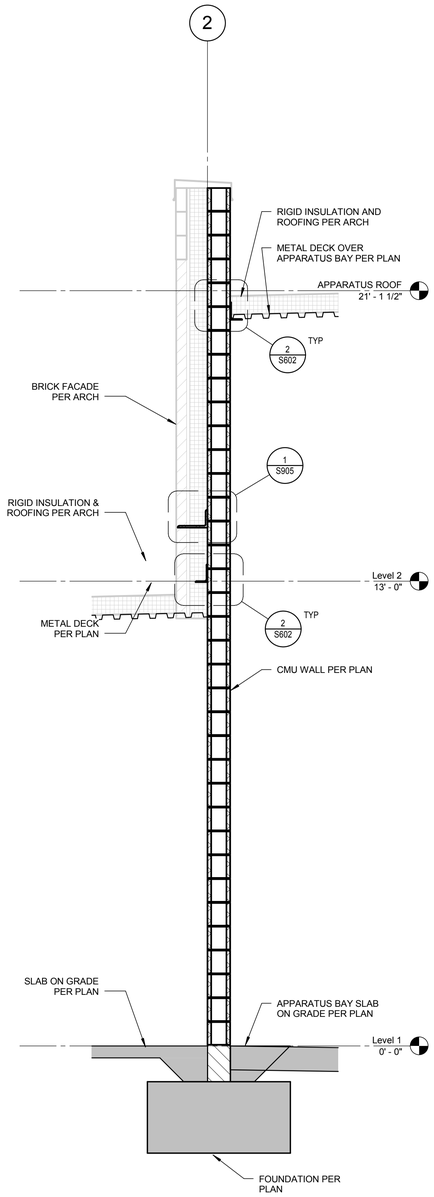

4 WALL SECTION
SCALE : 1/2" = 1'-0"

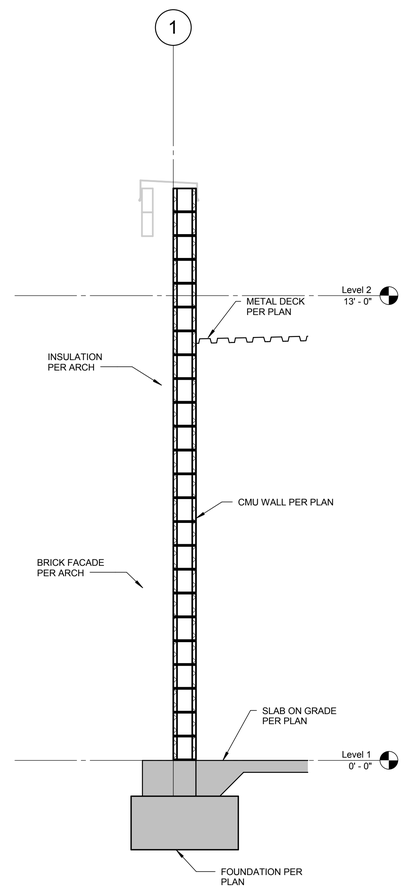

3 WALL SECTION
SCALE : 1/2" = 1'-0"

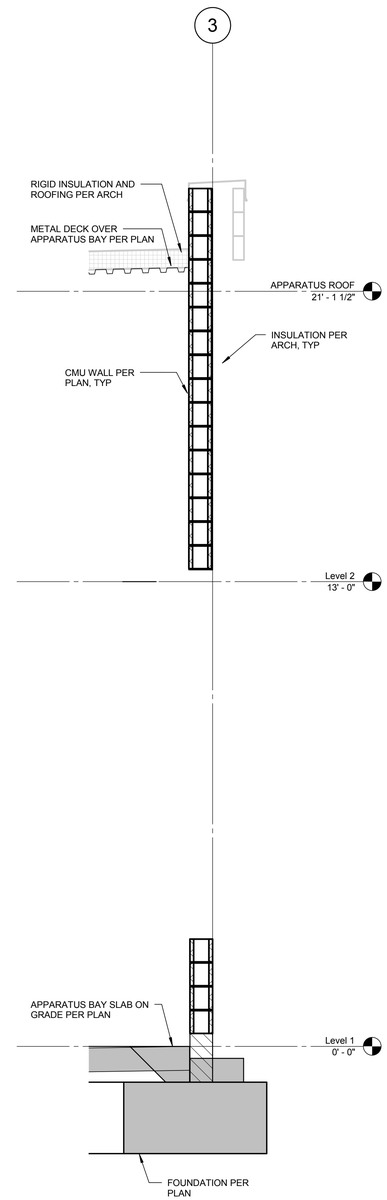

2 WALL SECTION
SCALE : 1/2" = 1'-0"

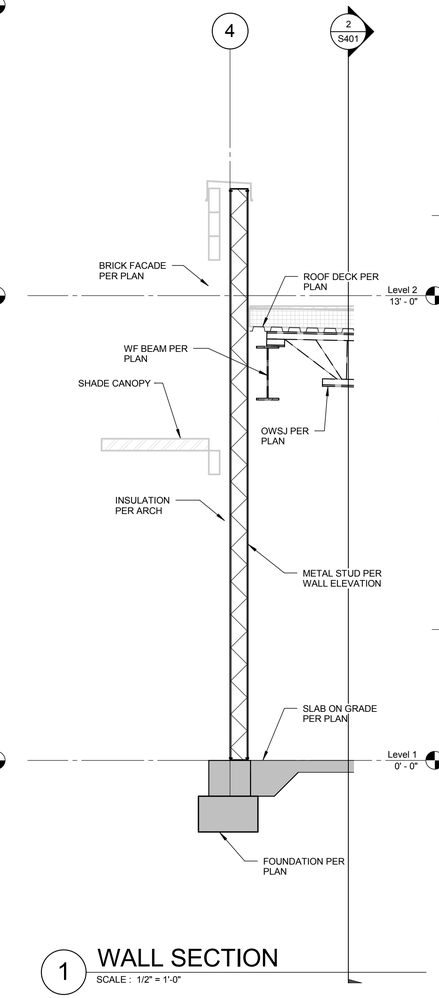

1 WALL SECTION
SCALE : 1/2" = 1'-0"

ARCHITECT:

COLE ARCHITECTS

COLE ARCHITECTS | 802 W. BANNOCK SUIT 208
Boise, ID 83702 | (208) 345-1800

TCA
architecture • planning

TCA | 6211 Roosevelt Way NE
Seattle, WA 98115 | (206) 522-3820

STAMP:

NOT FOR CONSTRUCTION

CONSULTANT:

kpff
412 E. Parkcenter Blvd, Suite 204
Boise, ID 83706
O: 208.336.6985
www.kpff.com

PROJECT INFORMATION:

City of Boise Fire Station 4

8485 W. Ustick Rd, Boise, ID 83704

REVISIONS:

MARK	DATE	DESCRIPTION

PROJECT PHASE	75% CD
PROJECT NUMBER	114747.01
PROJECT MANAGER	J. Chatfield
PROJECT ARCHITECT	J. Chatfield
DESIGN	J. Chatfield
DRAWN BY	Author

SHEET NAME:

WALL SECTIONS

SHEET NUMBER:

S450

11.09.15

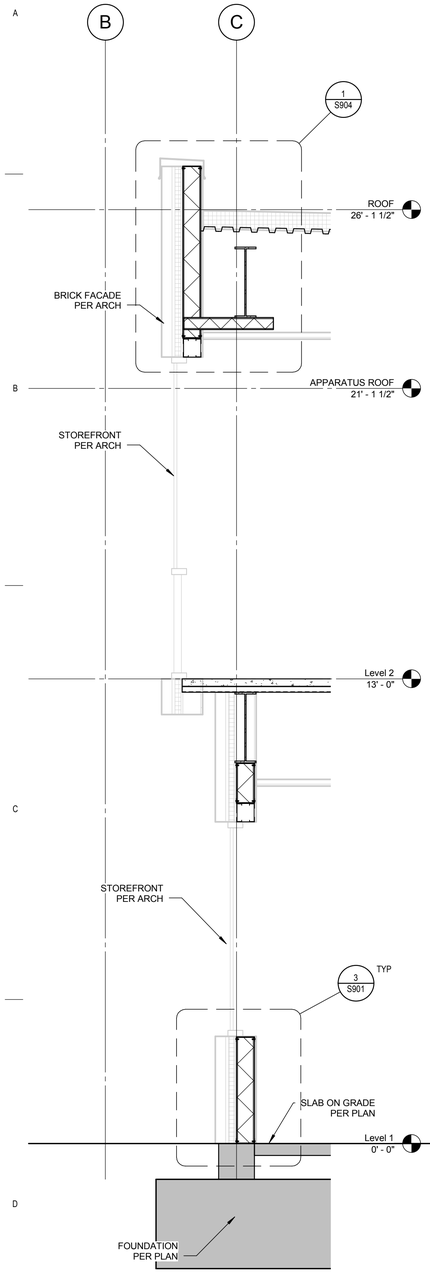

6 WALL SECTION
SCALE : 1/2" = 1'-0"

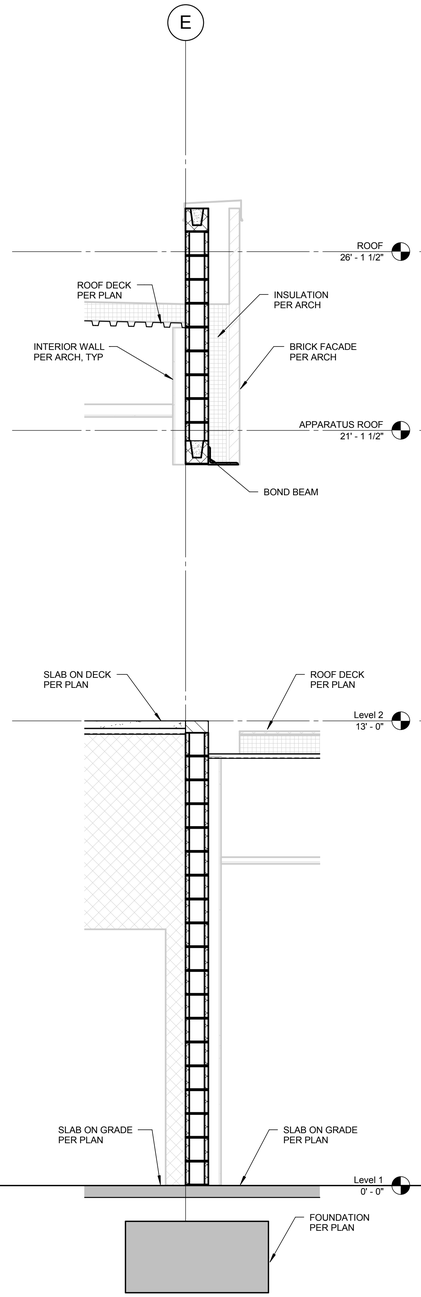

5 WALL SECTION
SCALE : 1/2" = 1'-0"

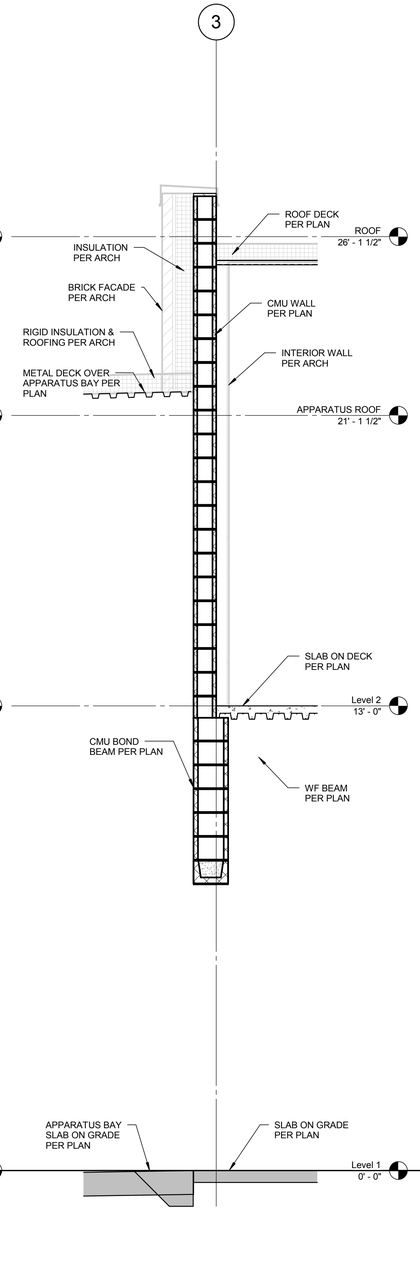

4 WALL SECTION
SCALE : 1/2" = 1'-0"

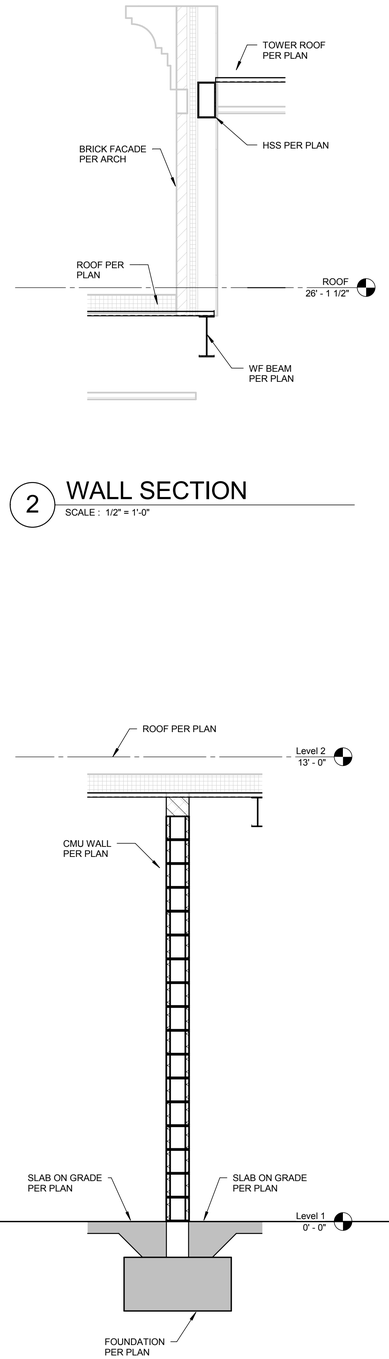

2 WALL SECTION
SCALE : 1/2" = 1'-0"

3 WALL SECTION
SCALE : 1/2" = 1'-0"

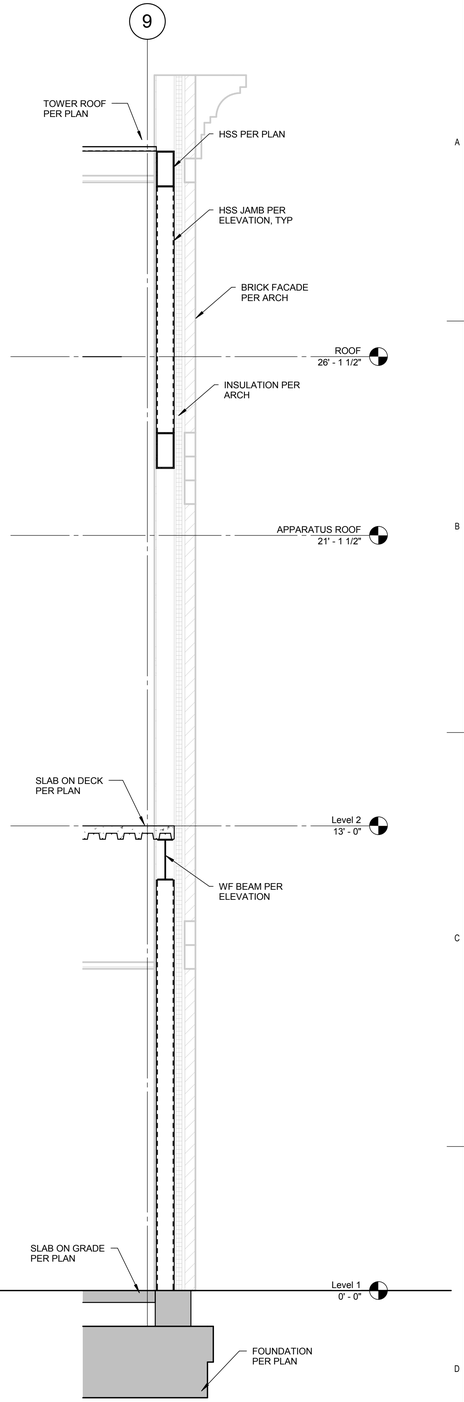

1 WALL SECTION
SCALE : 1/2" = 1'-0"

ARCHITECT:

COLE ARCHITECTS

COLE ARCHITECTS | 802 W. BANNOCK SUIT 208
Boise, ID 83702 | (208) 345-1800

TCA architecture • planning

TCA | 6211 Roosevelt Way NE
Seattle, WA 98115 | (206) 522-3820

STAMP:

NOT FOR CONSTRUCTION

CONSULTANT:

kpff

412 E. Parkcenter Blvd, Suite 204
Boise, ID 83706
O: 208.336.6985
www.kpff.com

PROJECT INFORMATION:

BOISE CITY OF TREES

BOISE FIRE EST. 1873 DEDICATION

City of Boise Fire Station 4

8485 W. Ustick Rd, Boise, ID 83704

REVISIONS:

MARK	DATE	DESCRIPTION

PROJECT PHASE	75% CD
PROJECT NUMBER	114747.01
PROJECT MANAGER	J. Chatfield
PROJECT ARCHITECT	J. Chatfield
DESIGN	J. Chatfield
DRAWN BY	Author

SHEET NAME:

WALL SECTIONS

SHEET NUMBER:

S451

11.09.15

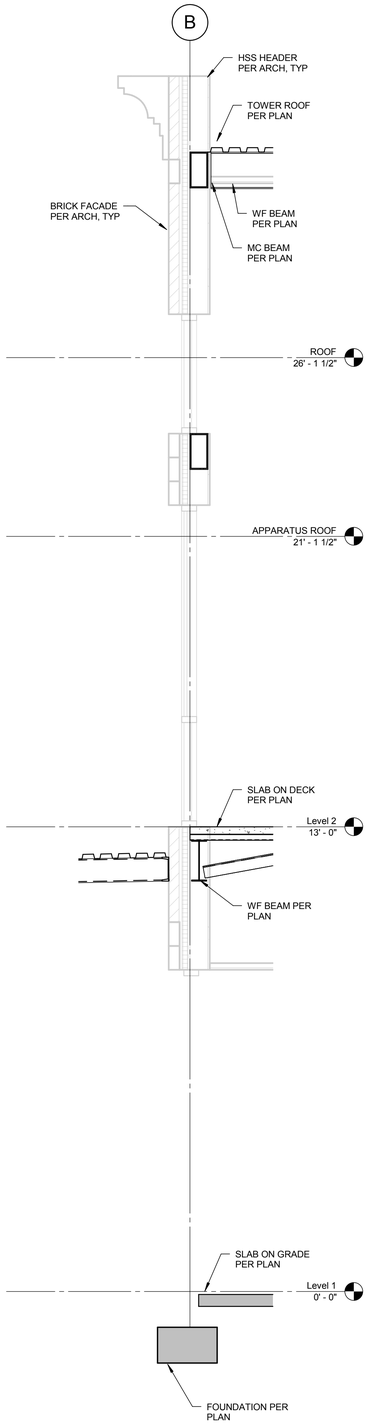

5 WALL SECTION
SCALE : 1/2" = 1'-0"

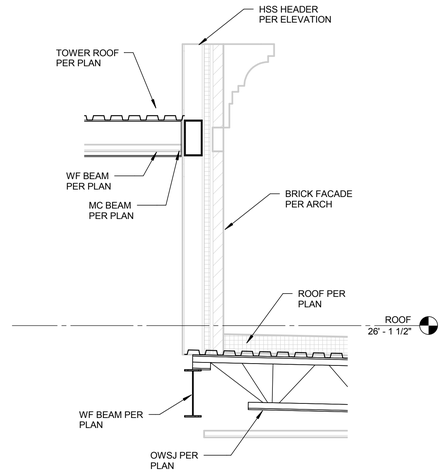

4 WALL SECTION
SCALE : 1/2" = 1'-0"

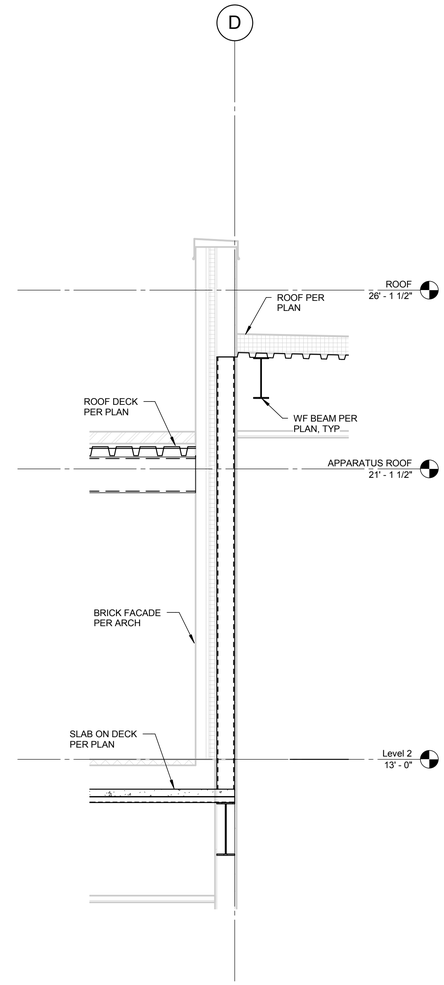

2 WALL SECTION
SCALE : 1/2" = 1'-0"

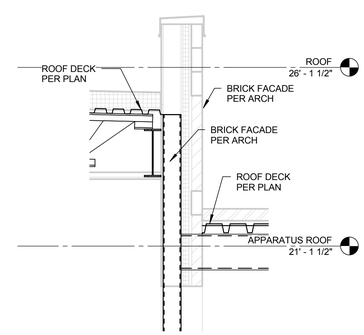

3 WALL SECTION
SCALE : 1/2" = 1'-0"

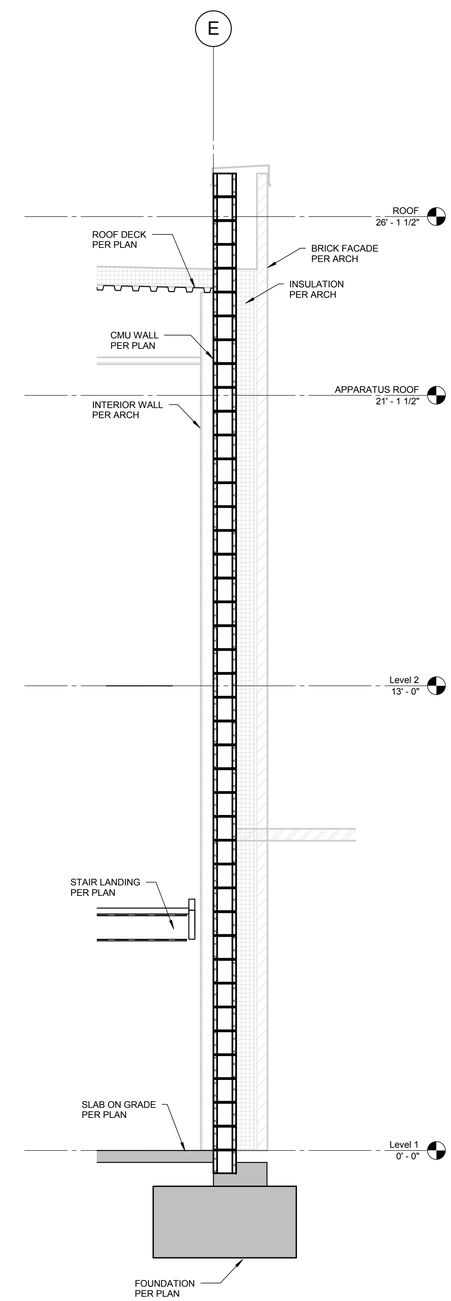

1 WALL SECTION
SCALE : 1/2" = 1'-0"

ARCHITECT:

COLE ARCHITECTS

COLE ARCHITECTS | 802 W. BANNOCK SUIT 208
Boise, ID 83702 | (208) 345-1800

TCA
architecture • planning

TCA | 6211 Roosevelt Way NE
Seattle, WA 98115 | (206) 522-3820

STAMP:

NOT FOR CONSTRUCTION

CONSULTANT:

kpff
412 E. Parkcenter Blvd, Suite 204
Boise, ID 83706
O: 208.336.6985
www.kpff.com

PROJECT INFORMATION:

City of Boise Fire Station 4

8485 W. Ustick Rd, Boise, ID 83704

REVISIONS:

MARK	DATE	DESCRIPTION

PROJECT PHASE	75% CD
PROJECT NUMBER	114747.01
PROJECT MANAGER	J. Chatfield
PROJECT ARCHITECT	J. Chatfield
DESIGN	J. Chatfield
DRAWN BY	Author

SHEET NAME:

WALL SECTIONS

SHEET NUMBER:

S452

11.09.15

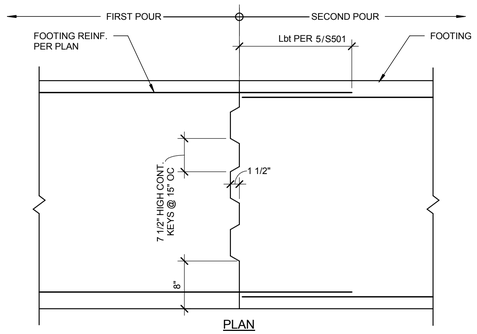

PLAN

NOTE:

WHERE CONTINUOUS FOOTING IS UNDER A WALL, LOCATE CONSTRUCTION JOINT AT 1/4 OF THE CLEAR OPENING WIDTH ABOVE FROM FACE OF OPENING, OR IN MIDDLE 1/3 OF THE DISTANCE BETWEEN COLUMNS.

6 CONT FOOTING CONSTRUCTION JOINT

SCALE : 1" = 1'-0"

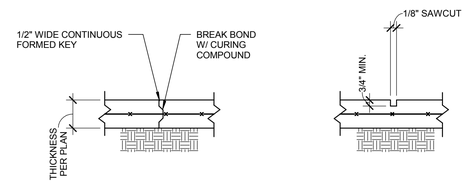

CONSTRUCTION JOINT

SAW-CUT JOINT

NOTES:

1. CONTROL JOINTS TO BE LOCATED AT COLUMN CENTER LINES AND AT 10'-0" MAX AND EVERY 400 SQUARE FEET.
2. IF SAW-CUT CONTROL JOINT TO BE USED, SAW-CUT WITHIN 24 HOURS OF POUR.
3. CONSTRUCTION JOINT TO BE LOCATED AS PER NOTE #1 UNLESS SPECIFICALLY INDICATED ON PLANS.

4 SLAB-ON-GRADE JOINTS

SCALE : 1" = 1'-0"

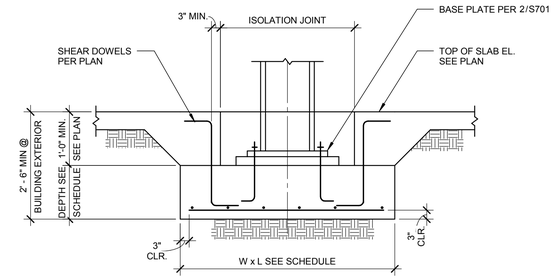

FOOTING SCHEDULE				
MARK	SIZE		REINFORCING	
	DEPTH	W x L	SHORT	LONG
F1	12"	4'-0"x4'-0"	(4) #6	(4) #6
F2	15"	5'-0"x5'-0"	(5) #6	(5) #6
F3	24"	6'-6"x6'-6"	(7) #6	(7) #6

1 TYPICAL PAD FOOTING DETAIL

SCALE : 1/2" = 1'-0"

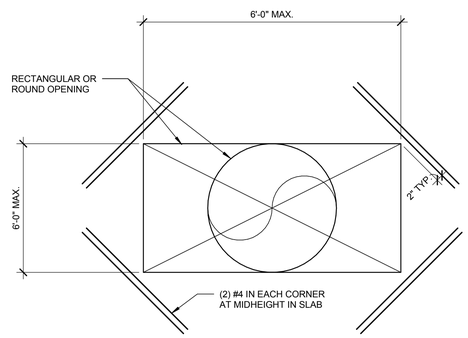

PLAN

NOTE:

ELIMINATE BARS AND KEYED JOINT IF OPENING IS LESS THAN 2'-0".

7 OPENING IN SLAB-ON-GRADE

SCALE : 1" = 1'-0"

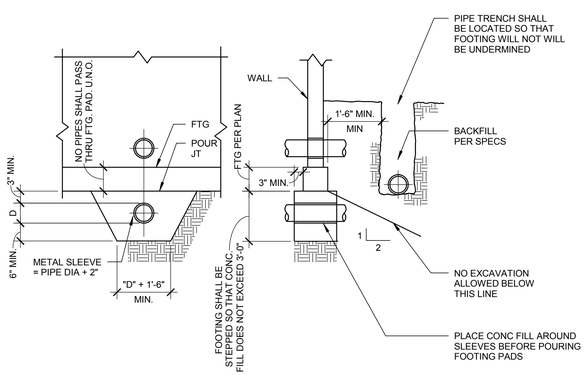

ELEVATION

SECTION

8 PIPE RENCH/FOOTING DETAIL

SCALE : 1" = 1'-0"

f'c= 3,000 psi

Size	Ld	Ldt	Lb	Lbt	Ldh
#4	22	28	28	37	11
#5	27	36	36	46	14
#6	33	43	43	56	16
#7	48	62	62	81	19
#8	55	71	71	93	22
#9	62	80	80	104	25
#10	70	90	90	118	28
#11	77	100	100	131	31

f'c= 4,000 psi
fy =60,000 psi

Size	Ld	Ldt	Lb	Lbt	Ldh
#4	19	25	25	32	9
#5	24	31	31	40	12
#6	28	37	37	48	14
#7	42	54	54	70	17
#8	47	62	62	80	19
#9	54	70	70	90	21
#10	60	78	78	102	24
#11	67	87	87	113	27

ABBREVIATIONS

db = BAR DIAMETER
Ld = TENSION DEVELOPMENT LENGTH
Ldt = TENSION DEVELOPMENT LENGTH FOR A TOP BAR
Lb = CLASS B LAP SPLICE LENGTH, 1.3 Ld
Lbt = CLASS B LAP SPLICE LENGTH FOR A TOP BAR, 1.3 Ldt
Ldh = TENSION DEVELOPMENT LENGTH FOR A STANDARD HOOK
SEE DETAIL 2/S501FOR STANDARD HOOK DETAIL REQUIREMENTS

5 DEVELOPEMENT AND SPLICE LENGTH SCHEDULE

SCALE : 1" = 1'-0"

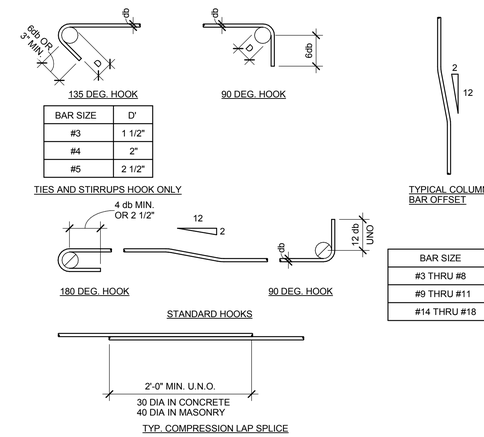

BAR SIZE	D'
#3	1 1/2"
#4	2"
#5	2 1/2"

BAR SIZE	D
#3 THRU #8	6d
#9 THRU #11	8d
#14 THRU #18	10d

2 REINFORCING BAR BENDING DETAIL

SCALE : 1" = 1'-0"

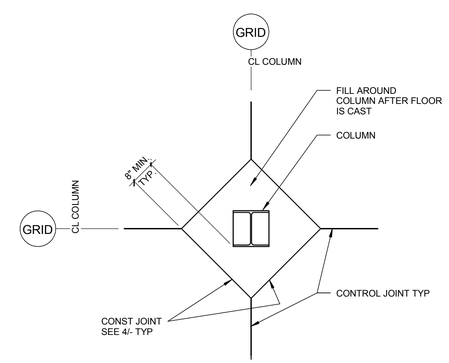

3 ISOLATION AT COLUMN AND SLAB-ON-GRADE

SCALE : 1" = 1'-0"

ARCHITECT:

COLE ARCHITECTS

COLE ARCHITECTS | 802 W. BANNOCK SUIT 208
Boise, ID 83702 | (208) 345-1800

TCA architecture • planning

TCA | 6211 Roosevelt Way NE
Seattle, WA 98115 | (206) 522-3820

STAMP:

NOT FOR CONSTRUCTION

CONSULTANT:

kpff

412 E. Parkcenter Blvd, Suite 204
Boise, ID 83706
O: 208.336.6985
www.kpff.com

PROJECT INFORMATION:

City of Boise Fire Station 4

8485 W. Ustick Rd, Boise, ID 83704

REVISIONS:

MARK	DATE	DESCRIPTION

PROJECT PHASE	75% CD
PROJECT NUMBER	114747.01
PROJECT MANAGER	J. Chatfield
PROJECT ARCHITECT	J. Chatfield
DESIGN	J. Chatfield
DRAWN BY	Author

SHEET NAME:

TYPICAL CONCRETE DETAILS

SHEET NUMBER:

S501

11.09.15

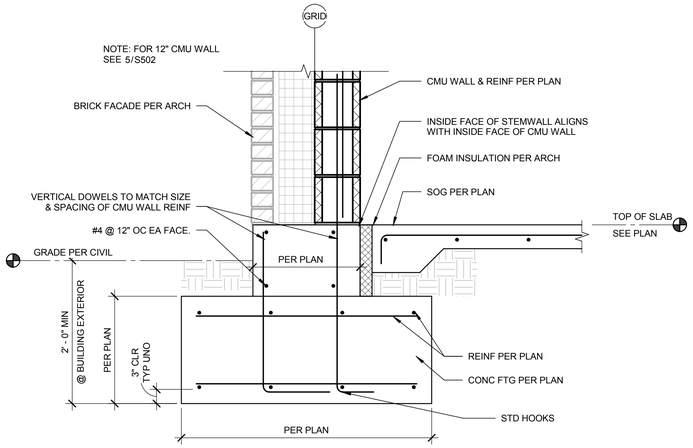

4 FOOTING AT 8" CMU WALL

SCALE : 1" = 1'-0"

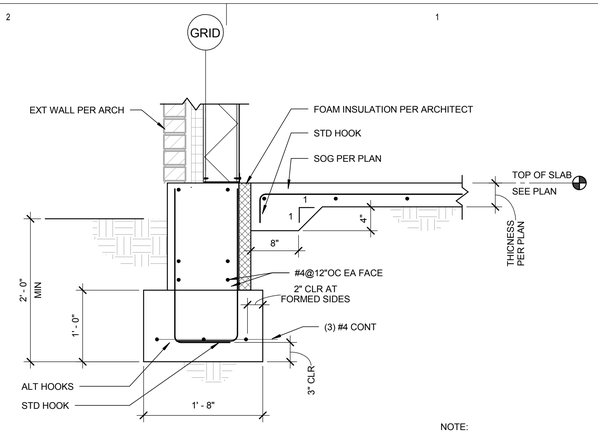

NOTE:

SEE 6/S502 AT ENDS, CORNERS, AND INTERSECTIONS OF CONCRETE STEMWALL.

1 TYPICAL EDGE-OF-SLAB

SCALE : 1" = 1'-0"

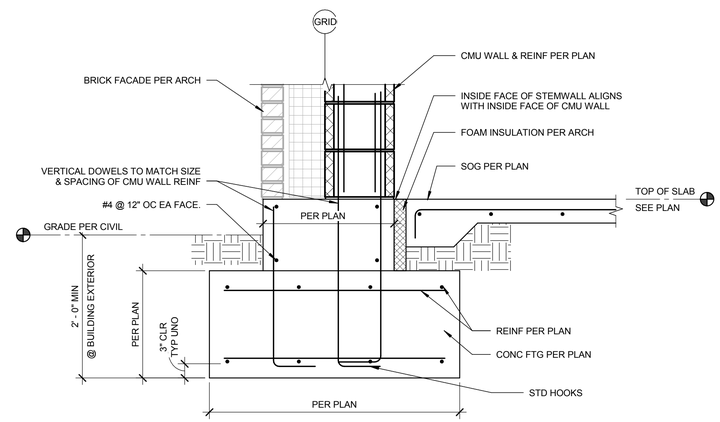

5 FOOTING AT 12" CMU WALL

SCALE : 1" = 1'-0"

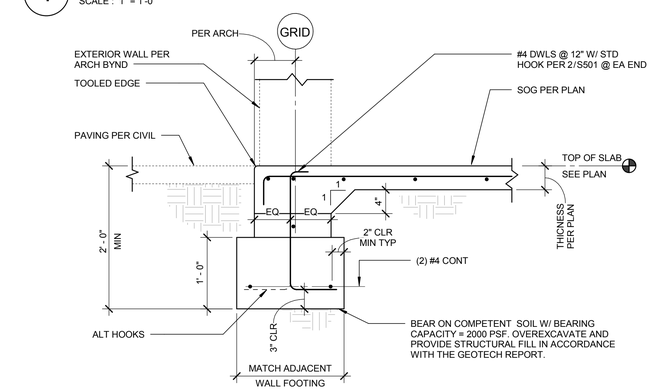

2 EDGE OF SLAB-ON-GRADE AT WALL OPENINGS

SCALE : 1" = 1'-0"

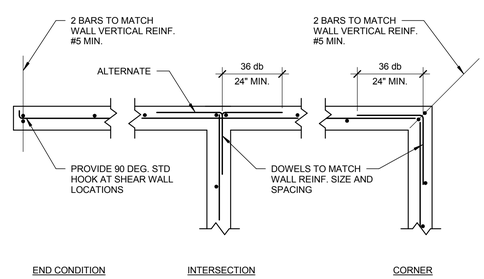

NOTE:
REINFORCEMENT SHOWN ON WALL ELEVATIONS AND OTHER SPECIFICALLY REFERENCED DETAILS TAKE PRECEDENCE OVER REINFORCEMENT SHOWN HERE.

6 WALL DETAILS/SINGL LAYER REINFORCING

SCALE : 1" = 1'-0"

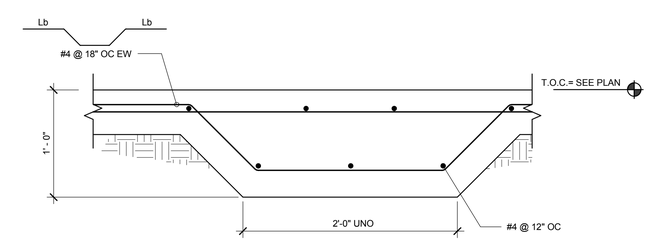

3 THICKENED SLAB-ON-GRADE

SCALE : 1 1/2" = 1'-0"

ARCHITECT:

COLE ARCHITECTS

COLE ARCHITECTS | 802 W. BANNOCK SUIT 208
Boise, ID 83702 | (208) 345-1800

TCA architecture • planning

TCA | 6211 Roosevelt Way NE
Seattle, WA 98115 | (206) 522-3820

STAMP:

NOT FOR CONSTRUCTION

CONSULTANT:

kpff

412 E. Parkcenter Blvd, Suite 204
Boise, ID 83706
O: 208.336.6985
www.kpff.com

PROJECT INFORMATION:

BOISE CITY OF TREES

BOISE FIRE Est. 1891 DEDICATION

City of Boise Fire Station 4

8485 W. Ustick Rd, Boise, ID 83704

REVISIONS:

MARK	DATE	DESCRIPTION

PROJECT PHASE	75% CD
PROJECT NUMBER	114747.01
PROJECT MANAGER	J. Chatfield
PROJECT ARCHITECT	J. Chatfield
DESIGN	J. Chatfield
DRAWN BY	NLP

SHEET NAME:

TYPICAL CONCRETE DETAILS

SHEET NUMBER:

S502

11.09.15

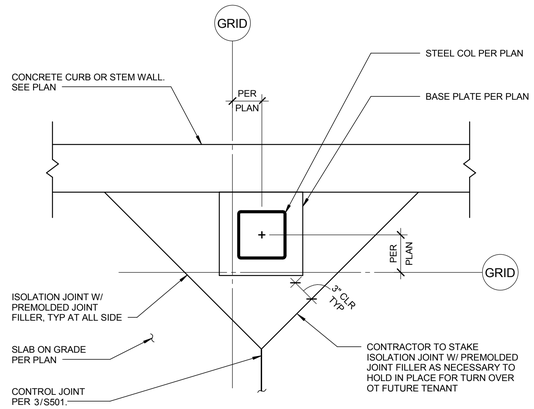

6 TYP ISOLATION JOINT - EDGE DETAIL

SCALE : 1" = 1'-0"

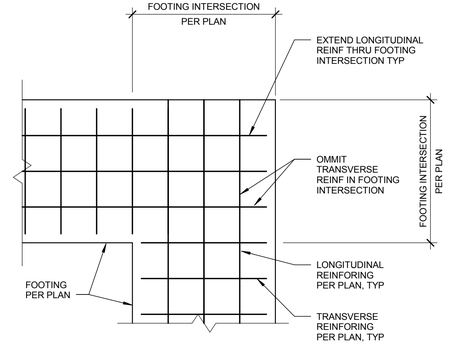

4 PARTIAL PLAN @ INTERSECTION OF CONT FOOTINGS

1/2" = 1'-0"

NOTES:

1. SEE PROJECT SPECS FOR MORE INFO.
2. CONTRACTOR IS NOT TO PUNCTURE VAPOR RETARDER DURING CONSTRUCTION OF SLAB ON GRADE. UNLESS AN APPROVED REPAIR OF THE VAPOR RETARDER IS PERFORMED PER THE MANUFACTURERS REQUIREMENTS.
3. VAPOR RETARDER TO TERMINATE AT EDGE OF BELOW GRADE FOOTINGS AND PITS.
4. VAPOR RETARDER MAY BE OMITTED AT EXTERIOR LOCATIONS WHERE APPROVED BY ARCH.
5. FOR 4" THICK SLAB PROVIDE 6" THICK LAYER OF GRAVEL. FOR 8" THICK SLAB PROVIDE 8" THICK LAYER OF GRAVEL.

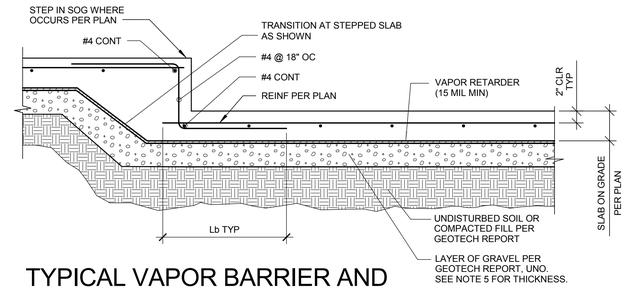

1 TYPICAL VAPOR BARRIER AND STEP AT SOG DETAIL

SCALE : 1" = 1'-0"

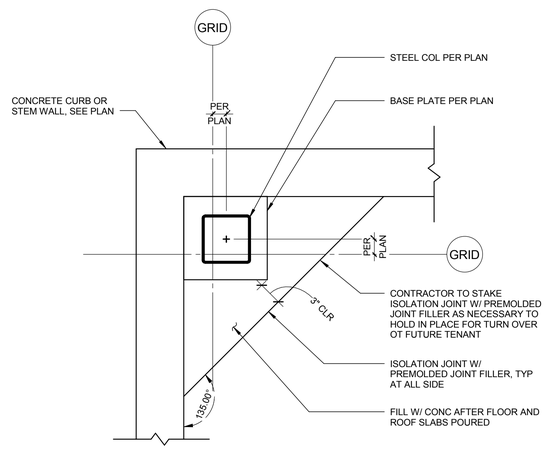

7 TYP ISOLATION JOINT - CORNER DETAIL

SCALE : 1" = 1'-0"

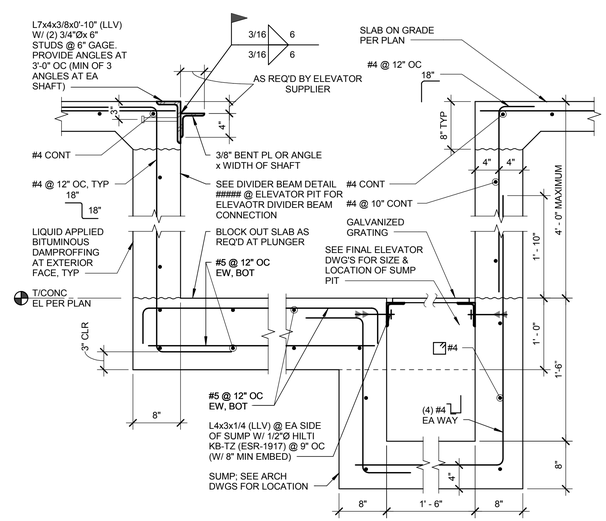

5 ELEVATOR PIT DETAIL

SCALE : 1" = 1'-0"

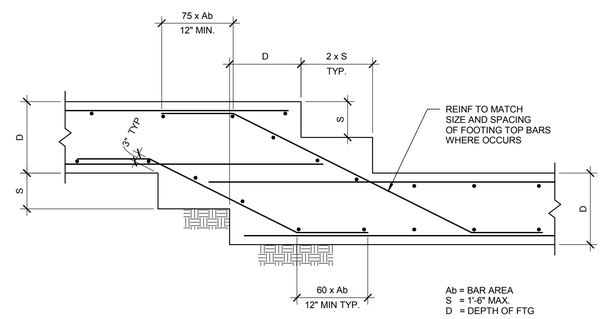

2 STEPPED FOOTING DETAIL

SCALE : 1" = 1'-0"

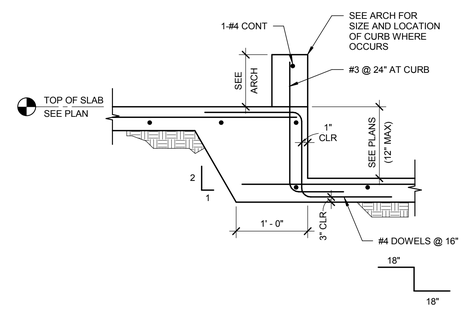

3 STEP IN SLAB ON GRADE

SCALE : 1" = 1'-0"

ARCHITECT:

COLE ARCHITECTS

COLE ARCHITECTS | 802 W. BANNOCK SUIT 208
Boise, ID 83702 | (208) 345-1800

TCA architecture • planning

TCA | 6211 Roosevelt Way NE
Seattle, WA 98115 | (206) 522-3820

STAMP:

NOT FOR CONSTRUCTION

CONSULTANT:

kpff

412 E. Parkcenter Blvd, Suite 204
Boise, ID 83706
O: 208.336.6985
www.kpff.com

PROJECT INFORMATION:

City of Boise Fire Station 4

8485 W. Ustick Rd, Boise, ID 83704

REVISIONS:

MARK	DATE	DESCRIPTION

PROJECT PHASE	75% CD
PROJECT NUMBER	114747.01
PROJECT MANAGER	J. Chatfield
PROJECT ARCHITECT	J. Chatfield
DESIGN	J. Chatfield
DRAWN BY	Author

SHEET NAME:

TYPICAL CONCRETE DETAILS

SHEET NUMBER:

S503

11.09.15

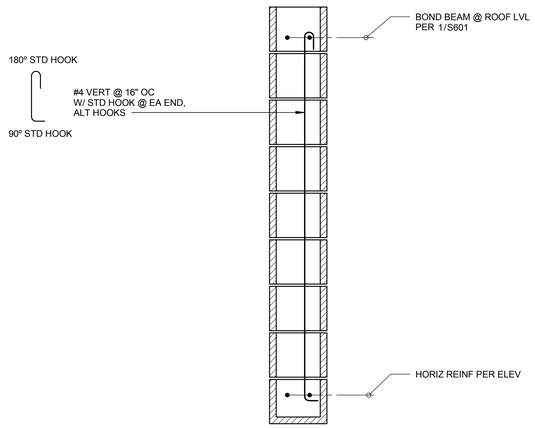

5 CMU DEEP BEAM

SCALE : 1" = 1'-0"

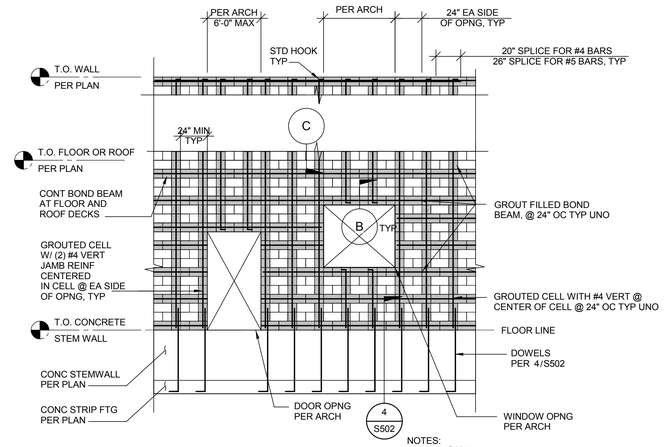

NOTES:
1. SEE 4/S601 FOR SPACING AND DETAIL OF CMU CONTROL JOINTS.
2. STANDARD HOOKS IN MASONRY, WHERE SHOWN, SHALL HAVE A TAIL LENGTH EQUAL TO 12 x BAR DIAMETER.
3. SEE 2/S601 AT WALL CORNERS AND INTERSECTIONS.

A ELEVATION

1 ELEVATION

3/16" = 1'-0"

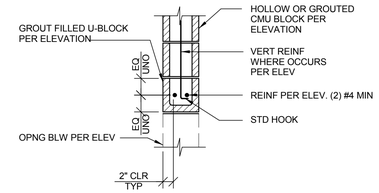

B GROUT FILLED U-BLOCK BOND BEAM @ OPENINGS

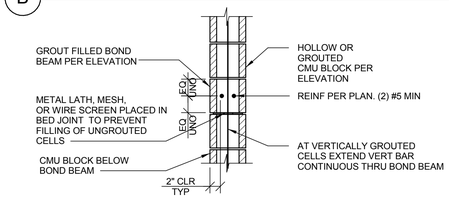

C GROUT FILLED BOND BEAM

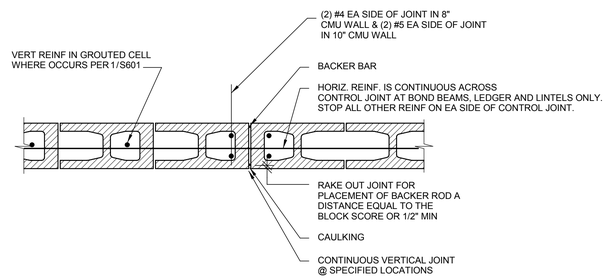

NOTE:
CONTROL JOINT LOCATION PER ARCH

4 TYPICAL CMU CONTROL JOINTS

SCALE : 1" = 1'-0"

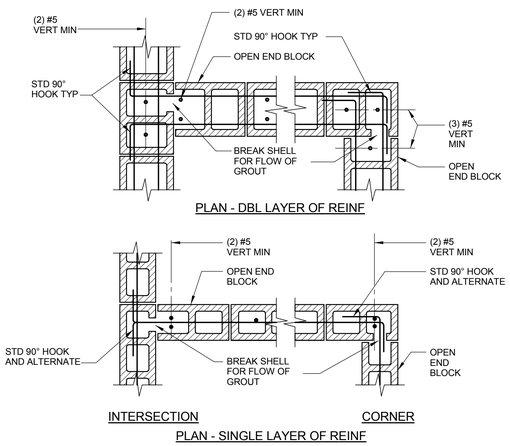

2 CMU WALL INTERSECTION AND CORNER DETAIL

SCALE : 1" = 1'-0"

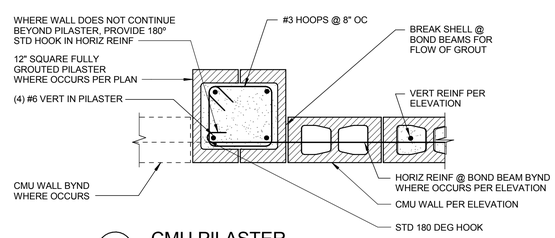

A CMU PILASTER

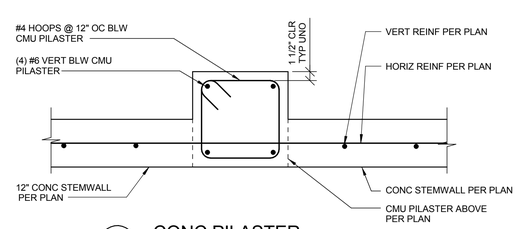

B CONC PILASTER

3 PILASTER DETAIL

SCALE : 1" = 1'-0"

ARCHITECT:

COLE ARCHITECTS

COLE ARCHITECTS | 802 W. BANNOCK SUIT 208
Boise, ID 83702 | (208) 345-1800

TCA architecture • planning

TCA | 6211 Roosevelt Way NE
Seattle, WA 98115 | (206) 522-3820

STAMP:

NOT FOR CONSTRUCTION

CONSULTANT:

kpff

412 E. Parkcenter Blvd, Suite 204
Boise, ID 83706
O: 208.336.6985
www.kpff.com

PROJECT INFORMATION:

City of Boise Fire Station 4

8485 W. Ustick Rd, Boise, ID 83704

REVISIONS:

MARK	DATE	DESCRIPTION

PROJECT PHASE	75% CD
PROJECT NUMBER	114747.01
PROJECT MANAGER	J. Chatfield
PROJECT ARCHITECT	J. Chatfield
DESIGN	J. Chatfield
DRAWN BY	Author

SHEET NAME:

TYPICAL MANSONRY DETAILS

SHEET NUMBER:

S601

11.09.15

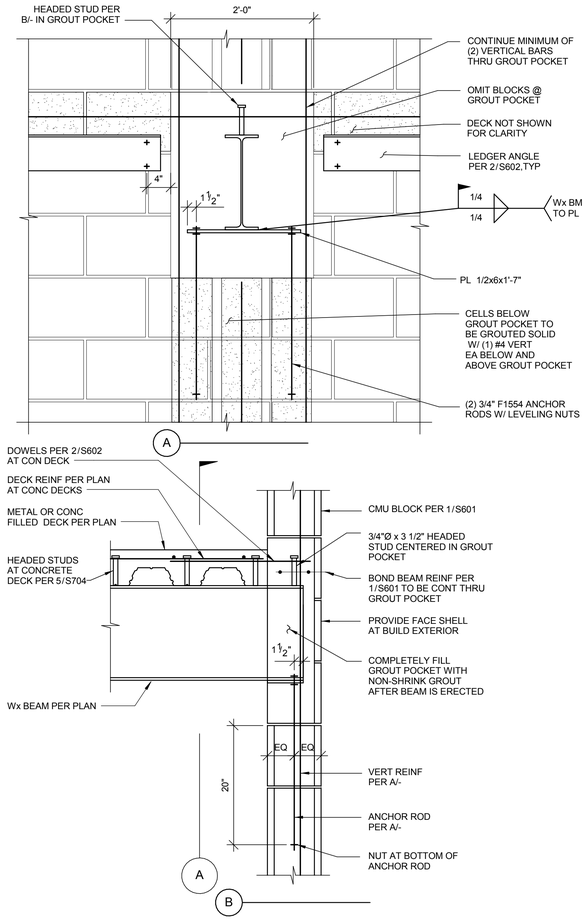

5 Wx BM TO CMU WALL GROUT POCKET DETAIL

SCALE : 1" = 1'-0"

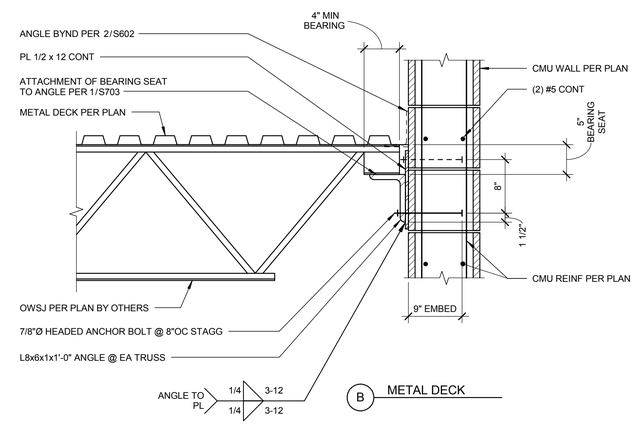

3 OWSJ TO CMU WALL CONNECTION

SCALE : 1" = 1'-0"

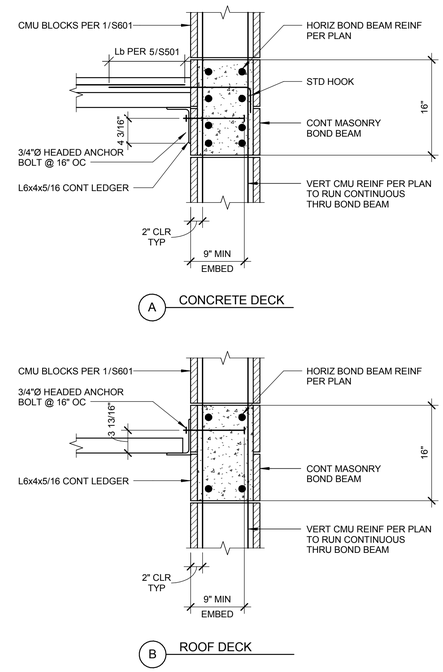

1 CONCRETE BOND BEAM

SCALE : 1" = 1'-0"

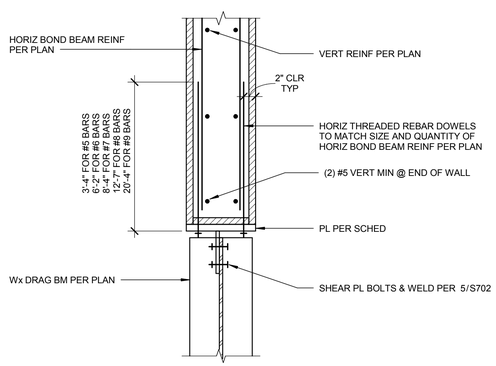

4 DRAG CONNECTION TO CMU WALL

SCALE : 1" = 1'-0"

HORIZ BOND BEAM REINF SIZE PER PLAN	PLATE THICKNESS	PLATE DEPTH	PLATE WIDTH
#5	3/4"	8"	MATCH WALL WIDTH
#7	1 1/2"	16"	MATCH WALL WIDTH
#8	1 5/8	16"	MATCH WALL WIDTH
#9	2"	16"	MATCH WALL WIDTH

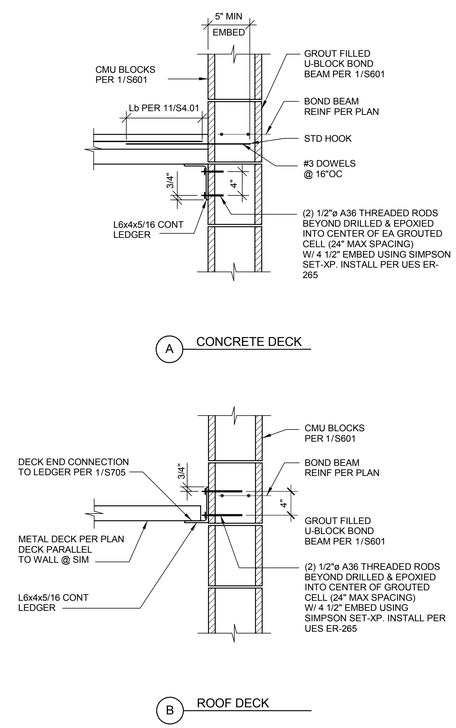

2 DECK TO CMU WALL

SCALE : 1" = 1'-0"

ARCHITECT:

COLE ARCHITECTS

COLE ARCHITECTS | 802 W. BANNOCK SUIT 208
Boise, ID 83702 | (208) 345-1800

TCA
architecture • planning

TCA | 6211 Roosevelt Way NE
Seattle, WA 98115 | (206) 522-3820

STAMP:

NOT FOR CONSTRUCTION

CONSULTANT:

kpff
412 E. Parkcenter Blvd, Suite 204
Boise, ID 83706
O: 208.336.6985
www.kpff.com

PROJECT INFORMATION:

City of Boise Fire Station 4

8485 W. Ustick Rd, Boise, ID 83704

REVISIONS:

MARK	DATE	DESCRIPTION

PROJECT PHASE	75% CD
PROJECT NUMBER	114747.01
PROJECT MANAGER	J. Chatfield
PROJECT ARCHITECT	J. Chatfield
DESIGN	J. Chatfield
DRAWN BY	AUTHOR

SHEET NAME:

TYPICAL MANSONRY DETAILS

SHEET NUMBER:

S602

11.09.15

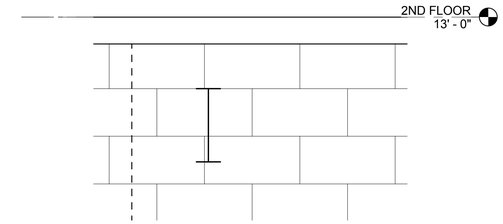

IN PROGRESS

3 WF TO CMU - IN PROGRESS 5

SCALE : 1" = 1'-0"

1 IN PROGRESS

SCALE : 1" = 1'-0"

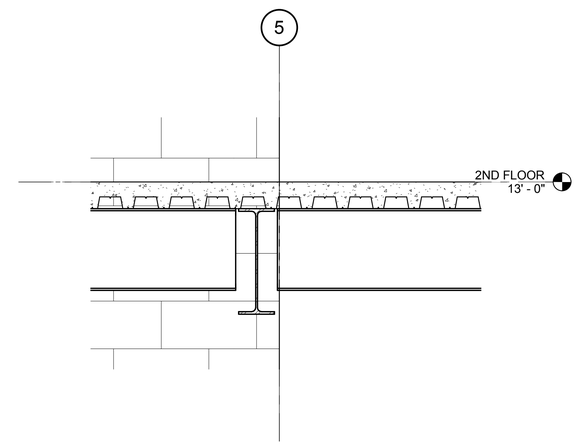

2 IN PROGRESS 2

SCALE : 1" = 1'-0"

ARCHITECT:

COLE ARCHITECTS

COLE ARCHITECTS | 802 W. BANNOCK SUIT 208
Boise, ID 83702 | (208) 345-1800

TCA architecture • planning

TCA | 6211 Roosevelt Way NE
Seattle, WA 98115 | (206) 522-3820

STAMP:

NOT FOR CONSTRUCTION

CONSULTANT:

kpff

412 E. Parkcenter Blvd, Suite 204
Boise, ID 83706
O: 208.336.6985
www.kpff.com

PROJECT INFORMATION:

BOISE CITY OF TREES

BOISE FIRE EST. 1891 DEDICATION

City of Boise Fire Station 4

8485 W. Ustick Rd, Boise, ID 83704

REVISIONS:

MARK	DATE	DESCRIPTION

PROJECT PHASE	75% CD
PROJECT NUMBER	114747.01
PROJECT MANAGER	J. Chatfield
PROJECT ARCHITECT	J. Chatfield
DESIGN	J. Chatfield
DRAWN BY	Author

SHEET NAME:

MASONRY DETAILS

SHEET NUMBER:

S650

11.09.15

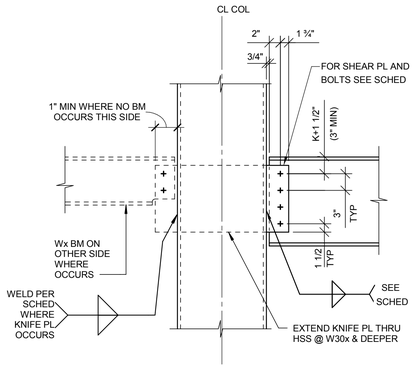

BEAM TO HSS COLUMN FLANGE (A)

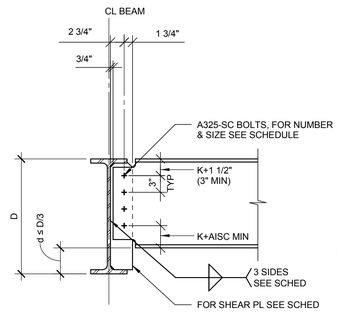

NOTES:
1. PROVIDE FULL HEIGHT STIFFENER PL WHERE INDICATED ON PLANS
2. WHERE "d" EXCEEDS D/3 SEE H/-.

BEAM TO BEAM W/ FULL-HT STIFF PLATE (B)

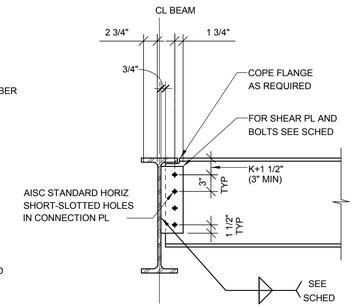

BEAM TO BEAM (C)

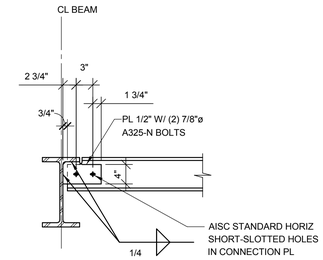

W6 OR C6 CONNECTION (D)

STANDARD BOLTED CONNECTION SCHEDULE

BEAM SIZE	NO.& SIZE OF BOLTS REQUIRED	PLATE THICKNESS	WELD SIZE
W8 C8	(2) 7/8"Ø	1/4"	1/4"
W10 C10	(2) 7/8"Ø	1/4"	1/4"
W12 C12	(3) 7/8"Ø	1/4"	1/4"
W14	(3) 7/8"Ø	1/4"	1/4"
W16	(4) 7/8"Ø	3/8"	1/4"
W18	(4) 7/8"Ø	3/8"	1/4"
W21	(5) 7/8"Ø	3/8"	1/4"
W24	(6) 7/8"Ø	3/8"	1/4"
W27	(7) 7/8"Ø	3/8"	1/4"
W30	(8) 7/8"Ø*	1/2"	5/16"
W33	(9) 7/8"Ø*	1/2"	5/16"
W36	(10) 7/8"Ø*	1/2"	3/8"

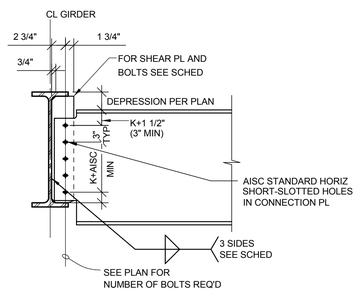

NOTE:
WHERE SIZE OF DEPRESSION DOES NOT LEAVE ADEQUATE SPACE FOR REQUIRED NUMBER OF BOLTS, SEE 3/S701 .

DEPRESED BM TO GIRDER (E)

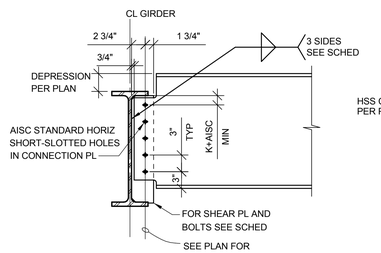

NOTE:
WHERE SIZE OF DEPRESSION DOES NOT LEAVE ADEQUATE SPACE FOR REQUIRED NUMBER OF BOLTS, SEE 3/S701 .

BM TO DEPRESSED GIRDER (F)

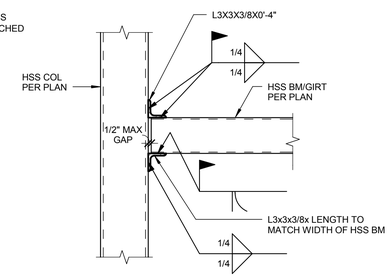

HSS BM TO HSS COL (G)

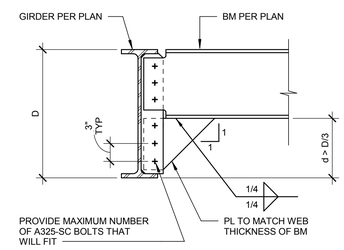

NOTE:
FOR BALANCE OF INFO SEE B/-

BM TO DEEP GIRDER W/ FULL HT STIFFENER (H)

CONNECTION NOTES:

1. ALL BOLTS TO BE ASTM A325-N AND FULLY PRETENSIONED PER AISC STANDARDS EXCEPT AS DESCRIBED IN NOTES 2 & 7.
2. BOLTS IN BEAM TO BEAM CONNECTIONS SHALL BE TIGHTENED TO AISC "SNUG TIGHT" CONDITION UNLESS NOTED OTHERWISE IN DETAILS.
3. CONNECTION PLATES TO HAVE AISC SHORT SLOTTED HOLES UNLESS NOTED OTHERWISE.
4. USE A36 STEEL FOR ALL SHEAR TABS IN THIS DETAIL UNO.
5. 'K' PER AISC, LARGER OF THE TWO CONNECTING BEAMS.
6. BOLTS IN CONNECTIONS OF MEMBERS DESIGNATED AS PART OF THE LATERAL FORCE RESISTING SYSTEM (LFRS) TO BE A325-N SLIP CRITICAL BOLTS WITH CLASS-A FAYING SURFACE UNLESS NOTED OTHERWISE.

1 STANDARD BOLTED BEAM CONNECTION DETAILS - HSS COLUMNS AND BEAMS

SCALE : 1" = 1'-0"

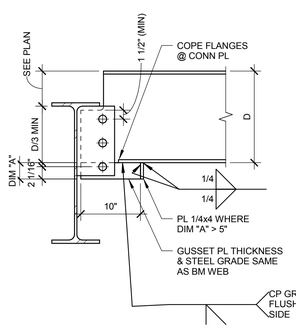

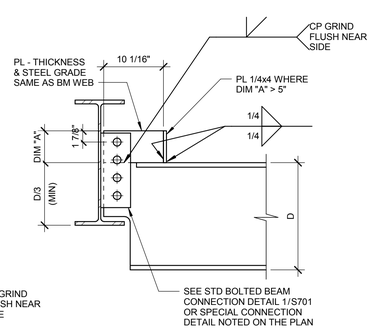

B SECTION
1" = 1'-0"

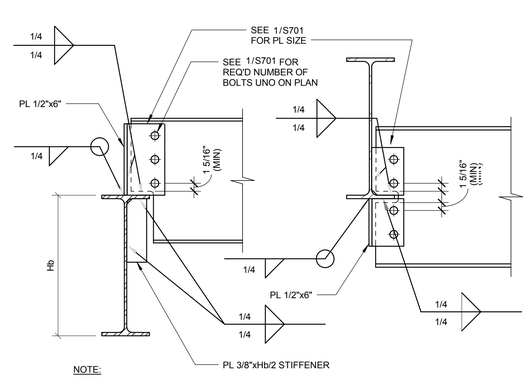

NOTE:
1. DETAIL MAY BE INVERTED WHERE TOP OF GIRDER IS LOWER THAN BEAM.

B SECTION
1" = 1'-0"

3 TYPICAL CONNECTION FOR BEAMS @ DIFFERENT ELEVATIONS

SCALE : 1" = 1'-0"

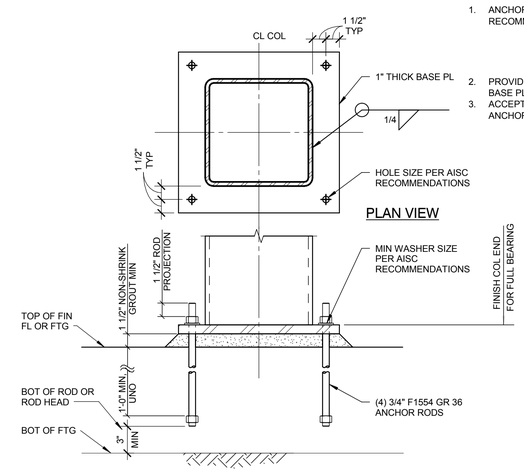

NOTES:
1. ANCHOR ROD HOLE DIAMETERS ( ) SHALL BE PER AISC RECOMMENDATION OR AS FOLLOWS:
   $d_b < 1"$: $d_h = d_b + 5/16"$
   $1" < d_b < 2"$: $d_h = d_b + 1/2"$
   $d_b \leq 2"$: $d_h = d_b + 1"$
2. PROVIDE MILL FINISH AT BOTTOM OF COLUMN AND TOP OF BASE PL.
3. ACCEPTABLE TO USE 3/4"DIAx9" EMBED HILTI KB3 EXPANSION ANCHORS AT CONTRACTOR'S OPTION.

2 TYPICAL GRAVITY COLUMN BASE PLATE

SCALE : 1 1/2" = 1'-0"

ARCHITECT:

COLE ARCHITECTS

COLE ARCHITECTS | 802 W. BANNOCK SUIT 208
Boise, ID 83702 | (208) 345-1800

TCA
architecture • planning
TCA | 6211 Roosevelt Way NE
Seattle, WA 98115 | (206) 522-3820

STAMP:

NOT FOR CONSTRUCTION

CONSULTANT:

kpff
412 E. Parkcenter Blvd, Suite 204
Boise, ID 83706
O: 208.336.6985
www.kpff.com

PROJECT INFORMATION:

City of Boise Fire Station 4

8485 W. Ustick Rd, Boise, ID 83704

REVISIONS:

MARK	DATE	DESCRIPTION

PROJECT PHASE	75% CD
PROJECT NUMBER	114747.01
PROJECT MANAGER	J. Chatfield
PROJECT ARCHITECT	J. Chatfield
DESIGN	J. Chatfield
DRAWN BY	CCH

SHEET NAME:

TYPICAL STEEL DETAILS

SHEET NUMBER:

S701

11.09.15

BOLTED DRAG CONNECTION SCHEDULE				
BEAM SIZE	TOTAL NO. OF BOLTS	PLATE "A" THICKNESS	PLATE "B" THICKNESS	WELD "a" SIZE
W8	(4)	1/2"	3/4"	5/16"
W12	(6)	1/2"	3/4"	5/16"
W14	(6)	1/2"	3/4"	5/16"
W16	(8)	1/2"	1"	5/16"
W18	(8)	1/2"	1"	5/16"
W21	(10)	5/8"	1"	1/2"
W24	(12)	5/8"	1"	1/2"
W27	(14)	5/8"	1"	1/2"
W30	(16)	3/4"	1"	1/2"
W33	(18)	3/4"	1"	1/2"

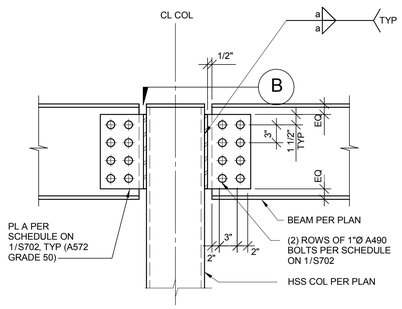

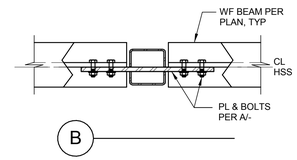

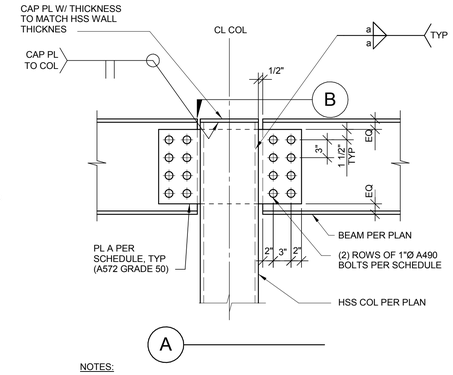

NOTES:

1. USE WHERE INDICATED BY —●□●— ON PLAN.
2. SEE DETAIL 5/S702 FOR ALTERNATE DRAG CONN DETAIL.
3. PLATE "B" IS SHOWN IN DETAIL 5/S702 .
4. SEE 3/S702 FOR DRAG CONNECTIONS THROUGH GIRDERS.
5. SEE 4/S702 FOR DRAG CONNECTIONS THROUGH OWSJ.

1 TYPICAL DRAG CONNECTION

SCALE : 1" = 1'-0"

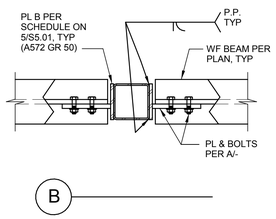

NOTES:

1. USE WHERE INDICATED BY —●□●— ON PLAN.
2. SEE DETAIL 1/S702 FOR BALANCE OF INFO.

5 ALTERNATE DRAG CONNECTION DETAIL

SCALE : 1" = 1'-0"

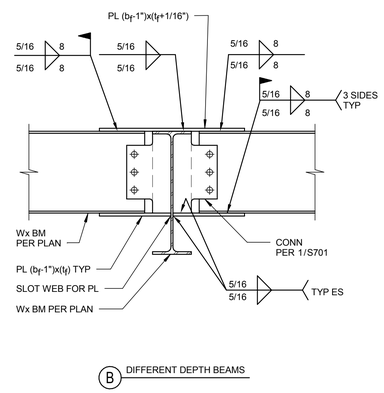

2 BEAM TO BEAM MOMENT CONNECTION

SCALE : 1" = 1'-0"

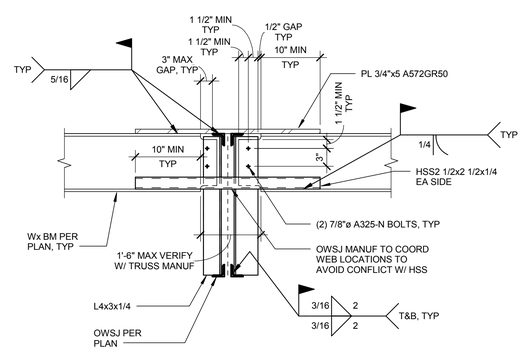

ROOF/FLOOR DECK NOT SHOWN FOR CLARITY

4 WF DRAG CONN THRU OWSJ

SCALE : 1" = 1'-0"

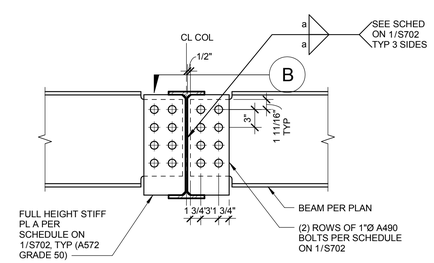

3 DRAG CONN THRU GIRDER

SCALE : 1" = 1'-0"

ARCHITECT:

COLE ARCHITECTS

COLE ARCHITECTS | 802 W. BANNOCK SUIT 208
Boise, ID 83702 | (208) 345-1800

TCA architecture • planning

TCA | 6211 Roosevelt Way NE
Seattle, WA 98115 | (206) 522-3820

STAMP:

NOT FOR CONSTRUCTION

CONSULTANT:

kpff

412 E. Parkcenter Blvd, Suite 204
Boise, ID 83706
O: 208.336.6985
www.kpff.com

PROJECT INFORMATION:

City of Boise Fire Station 4

8485 W. Ustick Rd, Boise, ID 83704

REVISIONS:

MARK	DATE	DESCRIPTION

PROJECT PHASE	75% CD
PROJECT NUMBER	114747.01
PROJECT MANAGER	J. Chatfield
PROJECT ARCHITECT	J. Chatfield
DESIGN	J. Chatfield
DRAWN BY	Author

SHEET NAME:

TYPICAL STEEL DETAILS

SHEET NUMBER:

S702

11.09.15

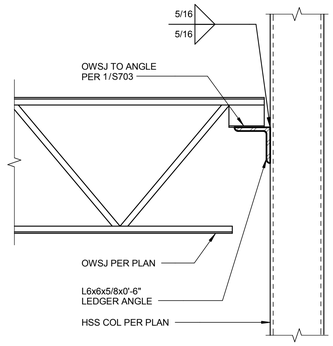

7 OWSJ TO CONT COL CONN

SCALE : 1" = 1'-0"

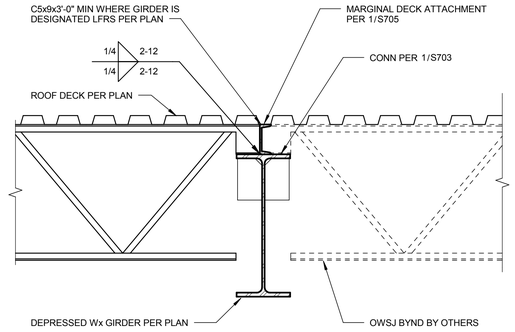

4 CHANNEL AT DEPRESSED LFRS GIRDERS

SCALE : 1" = 1'-0"

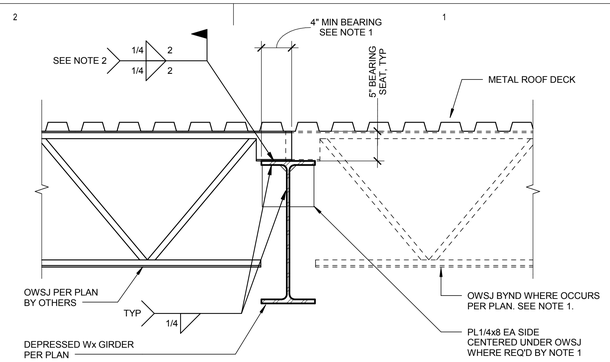

NOTES:
1. WHERE OWSJ OCCURS ON BOTH SIDES OF GIRDER, STAGGER OWSJ TO ALLOW FOR THE NOTED MINIMUM BEARING LENGTH. WHERE JOISTS MUST BUTT ON OPPOSITE SIDES & MIN BEARING CANNOT BE ACHIEVED PROVIDE 2" MIN BEARING & STIFFENER PLATES PER DETAIL B ON 1/S701 EA SIDE.
2. (2) 3/4" Ø a307 BOLTS MAY BE USED IN LIUE OF FIELD WELD UNLESS GIRDER IS NOTED "LFRS".

1 TYPICAL JOIST TO GIRDER

SCALE : 1" = 1'-0"

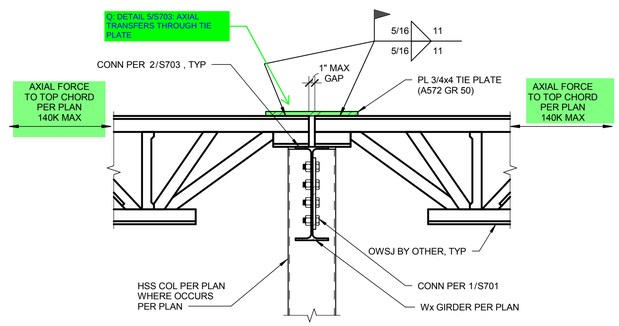

5 CONN BTWN OWSJ COLLECTORS

SCALE : 1" = 1'-0"

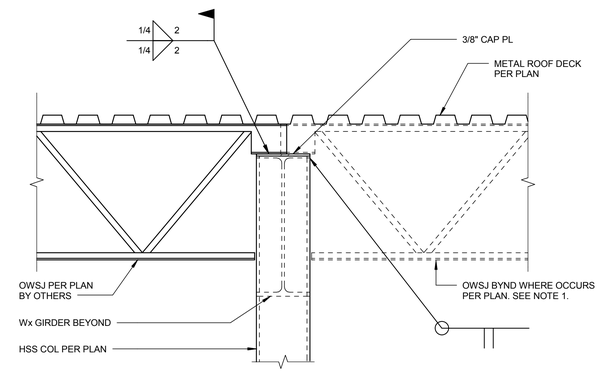

NOTE:
WHERE OWSJ OCCURS ON BOTH SIDES OF GIRDER, STAGGER OWSJ TO ALLOW FOR THE NOTED MINIMUM BEARING LENGTH. WHERE JOISTS MUST BUTT ON OPPOSITE SIDES & MIN BEARING CANNOT BE ACHIEVED PROVIDE 2" MIN BEARING & STIFFENER PLATES PER DETAIL B ON 1/S701 EA SIDE.

2 TYPICAL JOIST TO COLUMN

SCALE : 1" = 1'-0"

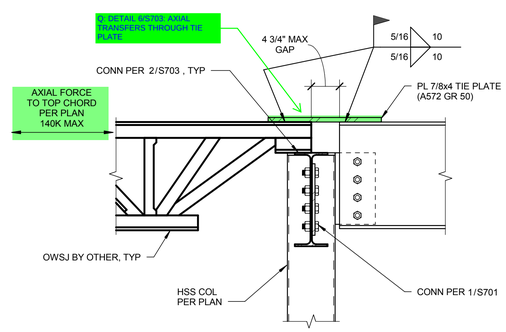

6 CONN BTWN OWSJ & Wx COLLECTOR

SCALE : 1" = 1'-0"

ARCHITECT:

COLE ARCHITECTS

COLE ARCHITECTS | 802 W. BANNOCK SUIT 208
Boise, ID 83702 | (208) 345-1800

TCA architecture • planning

TCA | 6211 Roosevelt Way NE
Seattle, WA 98115 | (206) 522-3820

STAMP:

NOT FOR CONSTRUCTION

CONSULTANT:

kpff

412 E. Parkcenter Blvd, Suite 204
Boise, ID 83706
O: 208.336.6985
www.kpff.com

PROJECT INFORMATION:

City of Boise Fire Station 4

8485 W. Ustick Rd, Boise, ID 83704

REVISIONS:

MARK	DATE	DESCRIPTION

PROJECT PHASE	75% CD
PROJECT NUMBER	114747.01
PROJECT MANAGER	J. Chatfield
PROJECT ARCHITECT	J. Chatfield
DESIGN	J. Chatfield
DRAWN BY	Author

SHEET NAME:

TYPICAL STEEL DETAILS

SHEET NUMBER:

S703

11.09.15

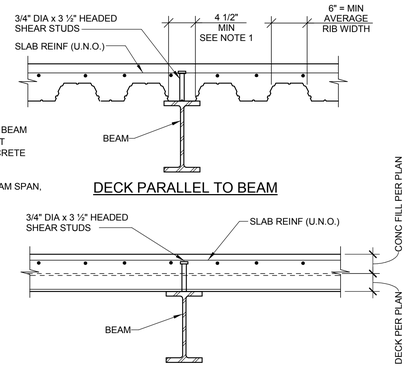

NOTES:

1. DECK RIB VALLEY TO BE CENTERED OVER BEAM WHERE POSSIBLE OR DECK MUST BE SPLIT FULL LENGTH OF BEAM TO PROVIDE CONCRETE HAUNCH WITH MIN. WIDTH OF 4 1/2"
2. AT DEPRESSIONS THAT OCCUR ALONG BEAM SPAN, SEE DETAIL 3/S701.
3. STUD SPACING PER 4/S704.

5 COMPOSITE BEAM TO COMPOSITE SLAB

SCALE : 1" = 1'-0"

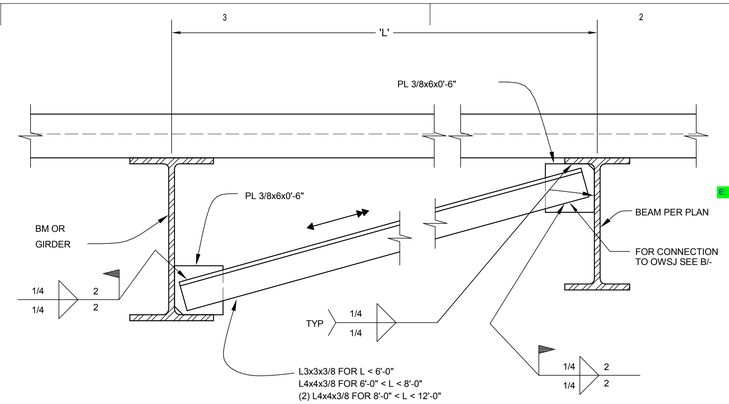

NOTES:

1. LOCATE BRACING AT MID-SPAN OF GIRDERS, UNO.
2. ◄——► DESIGNATION ON PLAN. SINGLE ARROW POINTS TO BEAM WITH BOTTOM FLANGE BRACE CONNECTION.

B **TYPICAL DIAGONAL ANGLE BRACING**

1" = 1'-0"

1 TYP DIAGONAL ANGLE BRACING

SCALE : 1" = 1'-0"

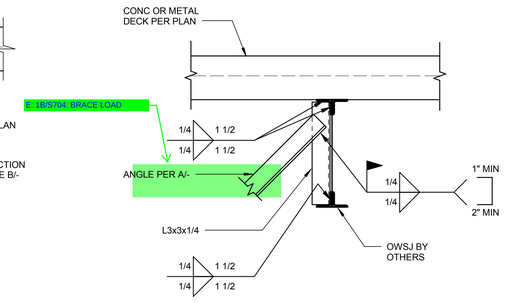

B **CONN TO OWSJ**

1" = 1'-0"

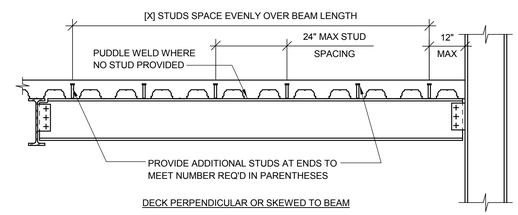

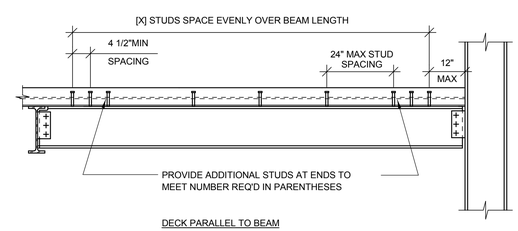

NOTES:

1. THE MINIMUM NUMBER OF STUDS REQUIRED IS SHOWN AS [X] ON FRAMING PLANS OR 24" O.C. WHERE SUTDS ARE REQUIRED, ADDITIONAL SUTDS MAY BE REQUIRED TO MEET THE ABOVE MAXIMUM SPACING REQUIREDMENTS.
2. IF TWO STUDS ARE REQUIRED IN ONE FLUTE THE TRANSVERSE SPACING SHALL BE 3" MINIMUM

4 COMPOSITE BEAM STUD SPACING

SCALE : 1" = 1'-0"

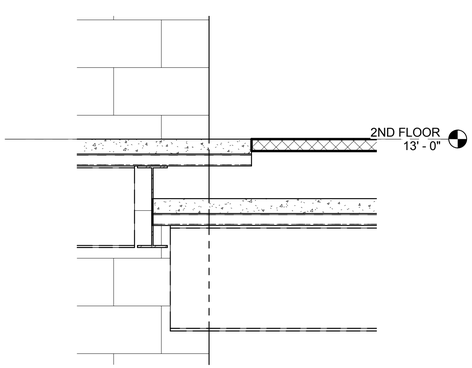

3 IN PROGRESS 4

SCALE : 1" = 1'-0"

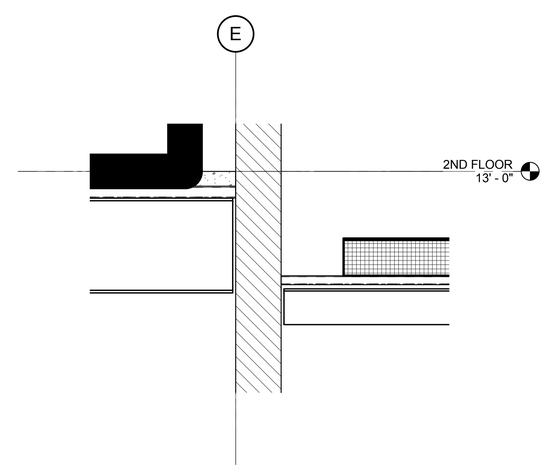

2 IN PROGRESS 3

SCALE : 1" = 1'-0"

ARCHITECT:

COLE ARCHITECTS

COLE ARCHITECTS | 802 W. BANNOCK SUIT 208
Boise, ID 83702 | (208) 345-1800

TCA architecture • planning

TCA | 6211 Roosevelt Way NE
Seattle, WA 98115 | (206) 522-3820

STAMP:

NOT FOR CONSTRUCTION

CONSULTANT:

kpff

412 E. Parkcenter Blvd, Suite 204
Boise, ID 83706
O: 208.336.6985
www.kpff.com

PROJECT INFORMATION:

City of Boise Fire Station 4

8485 W. Ustick Rd, Boise, ID 83704

REVISIONS:

MARK	DATE	DESCRIPTION

PROJECT PHASE	75% CD
PROJECT NUMBER	114747.01
PROJECT MANAGER	J. Chatfield
PROJECT ARCHITECT	J. Chatfield
DESIGN	J. Chatfield
DRAWN BY	NLP

SHEET NAME:

TYPICAL STEEL DETAILS

SHEET NUMBER:

S704

11.09.15

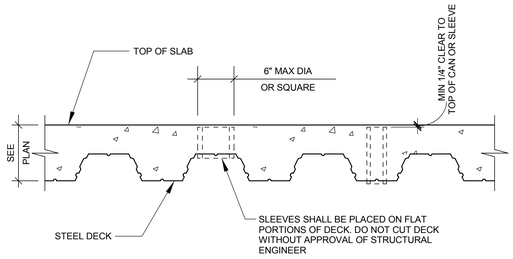

5 TYPICAL UNSTIFFENED DECK SLEEVE DETAIL

SCALE : 1 1/2" = 1'-0"

MARK	STEEL DECK TYPE.	GAGE	TOTAL THICKNESS (t)	CONC. TYPE	REINFORCING	STEEL DECK ATTACHMENT PATTERN				MAX. UNSHORED SPAN		
						END	INT.	SEAM	MARGINAL	SINGLE SPAN	DOUBLE SPAN	TRIPLE SPAN
D1	VERCO W2 FORLOK	20	4 1/2"	f'c=4000 psi NORMAL WT	#3 @ 16" O.C. EW	3/4"ø PUDDLE WELD@ 36/4 PATTERN	3/4"ø PUDDLE WELD@12"O.C	BUTTON PUNCH @ 36"O.C.	3/4"ø PUDDLE WELD@ 36/4 PATTERN	7'-6"	8'-6"	9'-6"
D2	PLB-36	18	1 1/2"	N/A	N/A	3/4"ø PUDDLE WELD@ 36/5 PATTERN	3/4"ø PUDDLE WELD@12"O.C	VERCO SIDECAP @ 12" OC	3/4"ø PUDDLE WELD@ 36/5 PATTERN	N/A	N/A	N/A
D3	PLN-24	16	3"	N/A	N/A	3/4"ø PUDDLE WELD@ 24/4 PATTERN	3/4"ø PUDDLE WELD@12"O.C	VERCO SIDECAP @ 12" OC	3/4"ø PUDDLE WELD@ 24/4 PATTERN	N/A	N/A	N/A

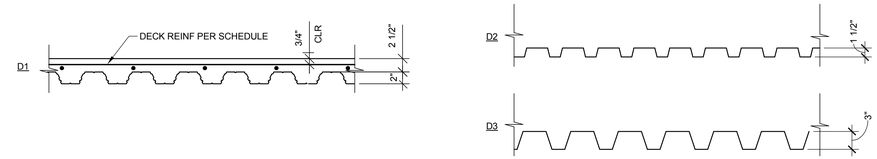

1 STEEL DECK SCHEDULE

SCALE : 1" = 1'-0"

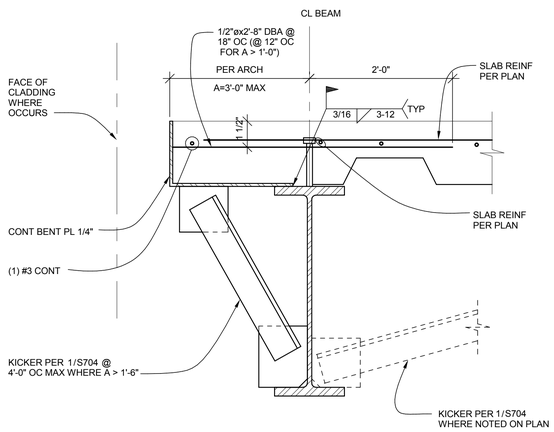

6 TYP EXTERIOR EDGE OF CONCRETE DECK

SCALE : 1" = 1'-0"

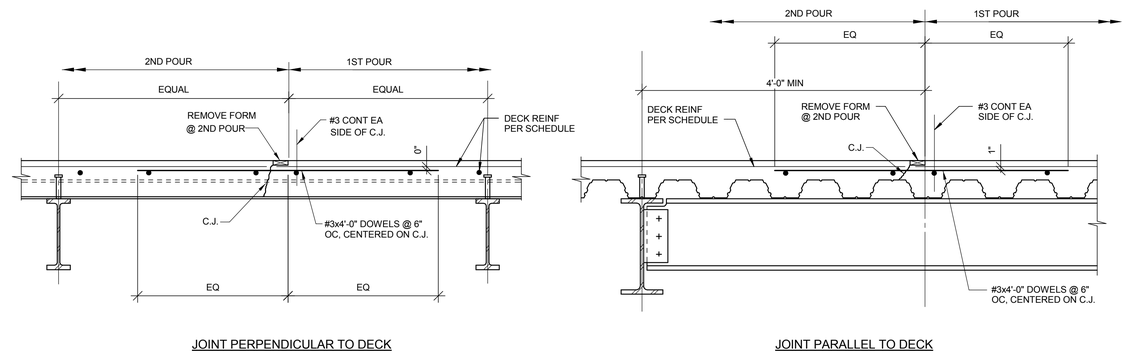

2 CONSTRUCTION JOINT FOR SLAB

SCALE : 1" = 1'-0"

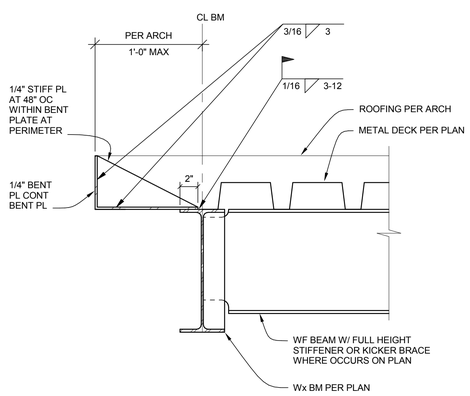

7 EDGE OF BARE METAL DECK

SCALE : 1" = 1'-0"

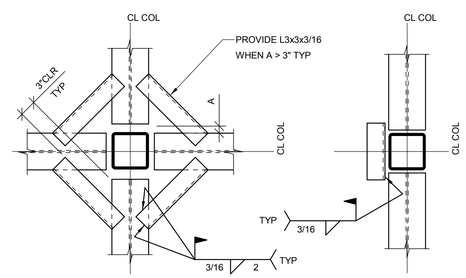

NOTE:
DECK SUPPLIER SHALL PROVIDE REQUIRED DECK SUPPORTS AND CLOSURES AROUND COLUMN.

4 METAL DECK SUPPORT AT COLUMN

SCALE : 1" = 1'-0"

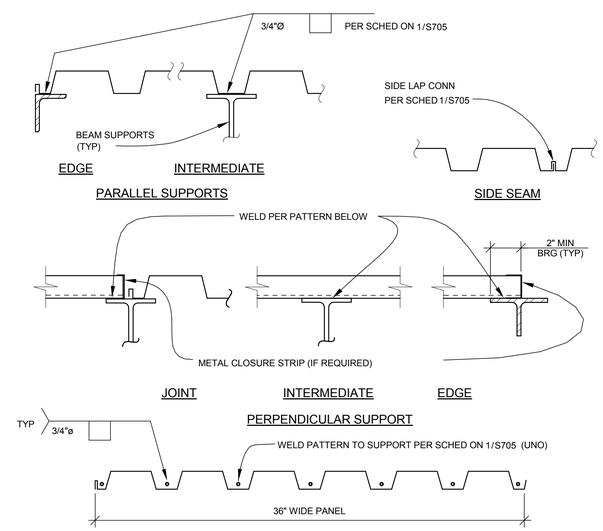

3 TYP ROOF DECK WELDING

SCALE : 1" = 1'-0"

ARCHITECT:

COLE ARCHITECTS

COLE ARCHITECTS | 802 W. BANNOCK SUIT 208
Boise, ID 83702 | (208) 345-1800

TCA architecture • planning

TCA | 6211 Roosevelt Way NE
Seattle, WA 98115 | (206) 522-3820

STAMP:

NOT FOR CONSTRUCTION

CONSULTANT:

kpff
412 E. Parkcenter Blvd, Suite 204
Boise, ID 83706
O: 208.336.6985
www.kpff.com

PROJECT INFORMATION:

City of Boise Fire Station 4

8485 W. Ustick Rd, Boise, ID 83704

REVISIONS:

MARK	DATE	DESCRIPTION

PROJECT PHASE	75% CD
PROJECT NUMBER	114747.01
PROJECT MANAGER	J. Chatfield
PROJECT ARCHITECT	J. Chatfield
DESIGN	J. Chatfield
DRAWN BY	NLP

SHEET NAME:

TYPICAL STEEL DECK DETAILS

SHEET NUMBER:

S705

11.09.15

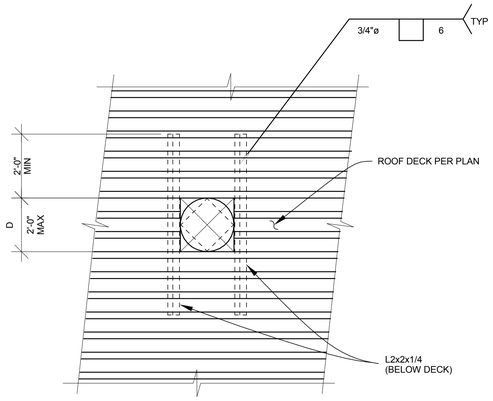

FOR D=6" TO 24"

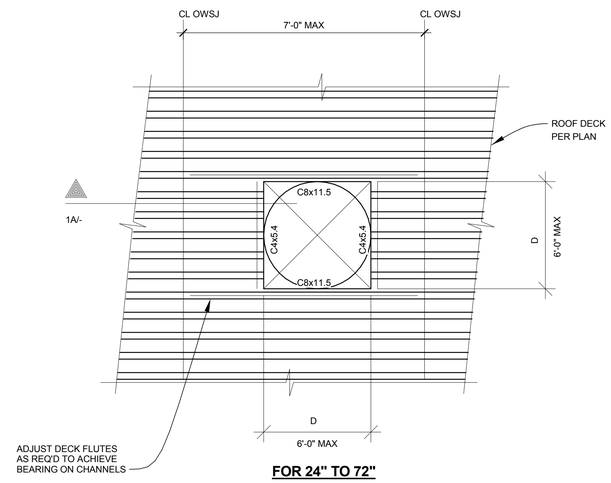

FOR 24" TO 72"

NOTES:

1. HOLES LESS THAN 6"Ø AND CUTTING NO MORE THAN 1 WEB REQUIRE NO REINFORCEMENT.
2. ALL METAL DECK OPENINGS SHOWN ABOVE APPLY ONLY TO DUCTWORK, PIPING, ROOF HATCHES AND SMALL AIR SHAFTS.
3. THESE REINFORCED OPENINGS ARE NOT INTENDED TO SUPPORT MECHANICAL EQUIPMENT.

1 TYPICAL OPENING DETAILS FOR METAL DECKS

SCALE : 1 1/2" = 1'-0"

ARCHITECT:

COLE ARCHITECTS

COLE ARCHITECTS | 802 W. BANNOCK SUIT 208
Boise, ID 83702 | (208) 345-1800

TCA

architecture • planning

TCA | 6211 Roosevelt Way NE
Seattle, WA 98115 | (206) 522-3820

STAMP:

NOT FOR CONSTRUCTION

CONSULTANT:

kpff

412 E. Parkcenter Blvd, Suite 204
Boise, ID 83706
O: 208.336.6985
www.kpff.com

PROJECT INFORMATION:

City of Boise Fire Station 4

8485 W. Ustick Rd, Boise, ID 83704

REVISIONS:

MARK	DATE	DESCRIPTION

PROJECT PHASE	75% CD
PROJECT NUMBER	114747.01
PROJECT MANAGER	J. Chatfield
PROJECT ARCHITECT	J. Chatfield
DESIGN	J. Chatfield
DRAWN BY	Author

SHEET NAME:

TYPICAL STEEL DECK DETAILS

SHEET NUMBER:

S706

11.09.15

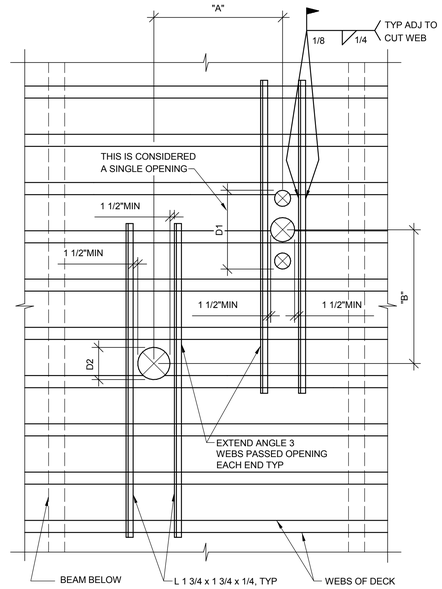

NOTES:

1. DO NOT CUT MORE THAN 2 ADJACENT WEBS.
2. HOLES LESS THAN 6" IN DIAMETER AND CUTTING NO MORE THAN 1 WEB NEED NO REINFORCING.
3. ANGLES SHALL BE PLACED ON TOP OF DECK.
4. IF DIMENSION "A" IS GREATER THAN 4D1, 4D2, OR 32" WHICHEVER IS LARGER, THEN THERE IS NO RESTRICTION ON DIMENSION "B".
5. IF DIMENSION "B" IS GREATER THAN 4D1, 4D2, OR 32" WHICHEVER IS LARGER, THEN THERE IS NO RESTRICTION ON DIMENSION "A".
6. IF DIMENSIONS "A" AND "B" ARE LESS THAN 4D1, 4D2, OR 32" WHICHEVER IS LARGER, THE OPENING GROUP WILL BE CONSIDERED AS A SINGLE HOLE, AND MUST BE REINFORCED AS REQUIRED FOR THE LARGER OPENING.
7. MAXIMUM DIMENSION FOR D1 AND D2 IS 12". HOLES CAN CUT NO MORE THAN TWO ADJACENT WEBS.
8. ALL OPENINGS ADJACENT TO BRACED FRAME BEAMS, DRAG BEAMS, AND CHORD BEAMS CAN ONLY BE DONE WITH THE STRUCTURAL ENGINEER'S APPROVAL.
9. INSTALL ALL CANS OR SLEEVES TO MAINTAIN MIN 1/4" CLEAR BELOW TOP OF CONCRETE.

2 DECK SLEEVE DETAIL

SCALE : 1" = 1'-0"

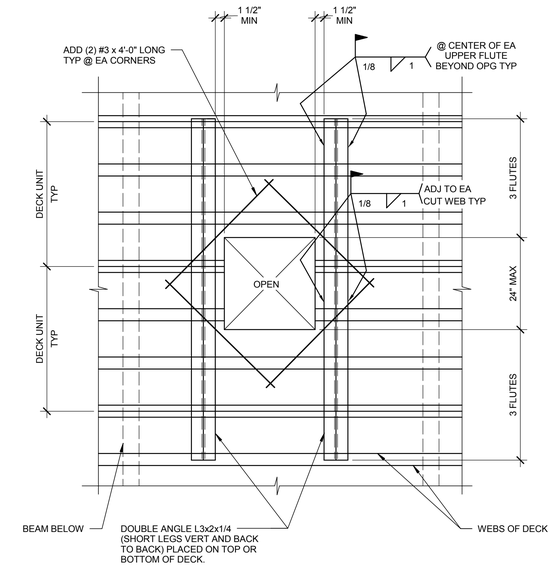

NOTE:

1. IF THE OPENING OR GROUP OF OPENINGS OCCUR IN ONE DECKING UNIT, THE OPENING OR OPENING GROUP MAY BE CUT PRIOR TO POURING OF CONCRETE.
2. IF, AS SHOWN IN THE DETAIL ABOVE, THE OPENING OR OPENING GROUP CUTS THROUGH TWO DECKING UNITS, THE DECKING SHALL NOT BE CUT UNTIL CONCRETE HAS BEEN PLACED AND CURED. AT THE TIME OF POURING, SUITABLE SLEEVES OR BULKHEADS SHALL BE PLACED AROUND THE OPENING.
3. ADD REBAR AT CORNERS OF OPENING.
4. WHEN THE MAXIMUM DIMENSION OF AN OPENING OR OPENING GROUP EXCEEDS 24", PLACE HEADER BEAM AROUND OPENING PER PLANS.
5. ALL OPENINGS ADJACENT TO BRACED FRAME BEAMS, DRAG BEAMS, AND CHORD BEAMS CAN ONLY BE DONE WITH THE STRUCTURAL ENGINEER'S.

1 DECK BLOCK OUT DETAIL

SCALE : 1" = 1'-0"

ARCHITECT:

COLE ARCHITECTS

COLE ARCHITECTS | 802 W. BANNOCK SUIT 208
Boise, ID 83702 | (208) 345-1800

TCA

architecture • planning

TCA | 6211 Roosevelt Way NE
Seattle, WA 98115 | (206) 522-3820

STAMP:

NOT FOR CONSTRUCTION

CONSULTANT:

kpff

412 E. Parkcenter Blvd, Suite 204
Boise, ID 83706
O: 208.336.6985
www.kpff.com

PROJECT INFORMATION:

City of Boise Fire Station 4

8485 W. Ustick Rd, Boise, ID 83704

REVISIONS:

MARK	DATE	DESCRIPTION

PROJECT PHASE	75% CD
PROJECT NUMBER	114747.01
PROJECT MANAGER	J. Chatfield
PROJECT ARCHITECT	J. Chatfield
DESIGN	J. Chatfield
DRAWN BY	Author

SHEET NAME:

TYPICAL STEEL DECK DETAILS

SHEET NUMBER:

S707

11.09.15

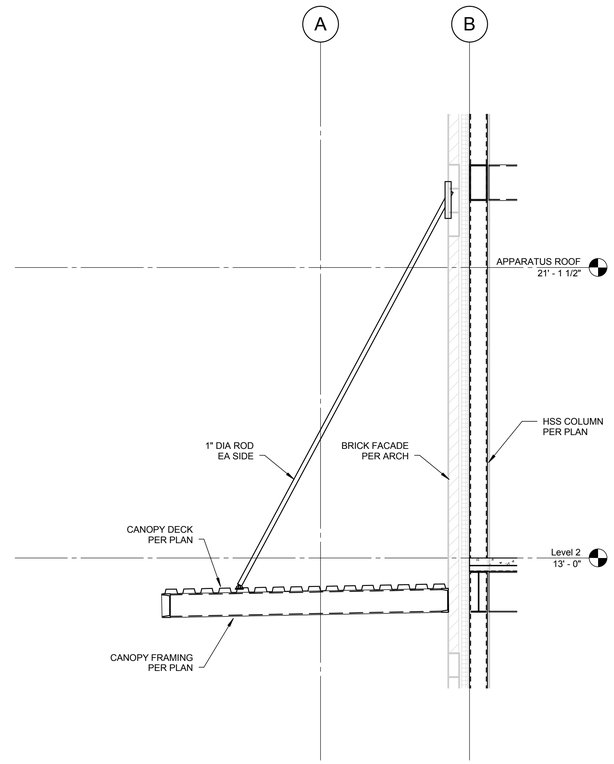

1 CANOPY SECTION

SCALE : 1/2" = 1'-0"

ARCHITECT:

COLE ARCHITECTS

COLE ARCHITECTS | 802 W. BANNOCK SUIT 208
Boise, ID 83702 | (208) 345-1800

TCA

architecture • planning

TCA | 6211 Roosevelt Way NE
Seattle, WA 98115 | (206) 522-3820

STAMP:

NOT FOR CONSTRUCTION

CONSULTANT:

kpff

412 E. Parkcenter Blvd, Suite 204
Boise, ID 83706
O: 208.336.6985
www.kpff.com

PROJECT INFORMATION:

BOISE CITY OF TREES

BOISE FIRE EST. 1910 DEDICATION

City of Boise Fire Station 4

8485 W. Ustick Rd, Boise, ID 83704

REVISIONS:

MARK	DATE	DESCRIPTION

PROJECT PHASE	75% CD
PROJECT NUMBER	114747.01
PROJECT MANAGER	J. Chatfield
PROJECT ARCHITECT	J. Chatfield
DESIGN	J. Chatfield
DRAWN BY	Author

SHEET NAME:

STEEL DETAILS

SHEET NUMBER:

S750

11.09.15

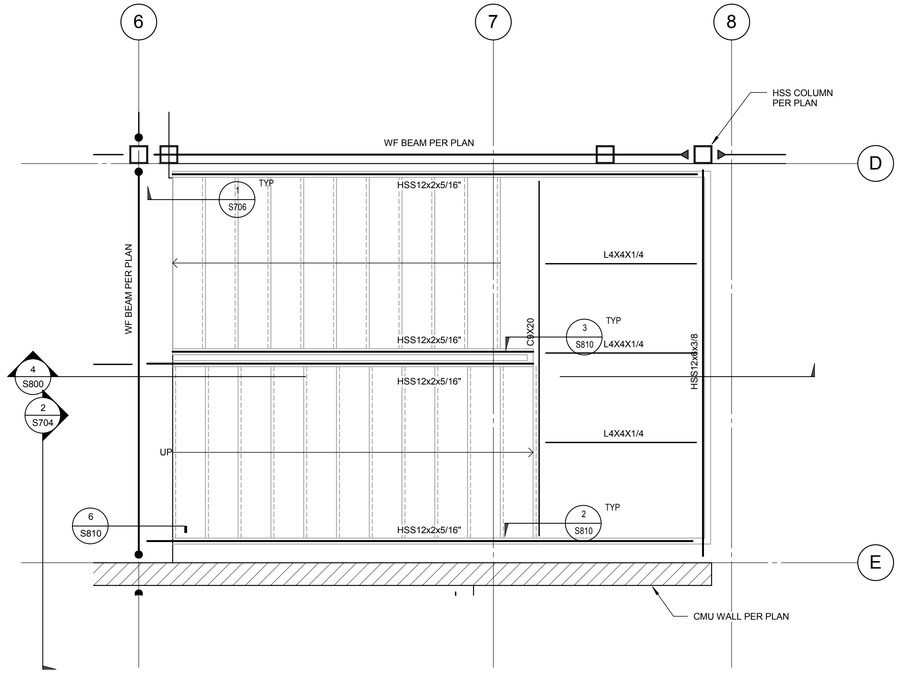

3 STAIR 2 PARTIAL PLAN

SCALE : 1/2" = 1'-0"

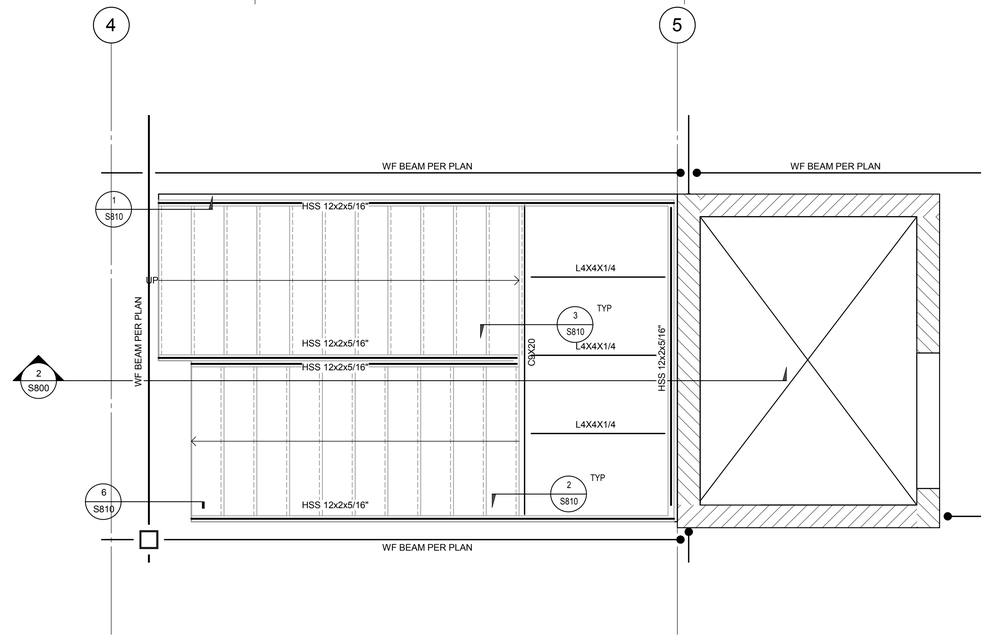

1 STAIR 1 PARTIAL PLAN

SCALE : 1/2" = 1'-0"

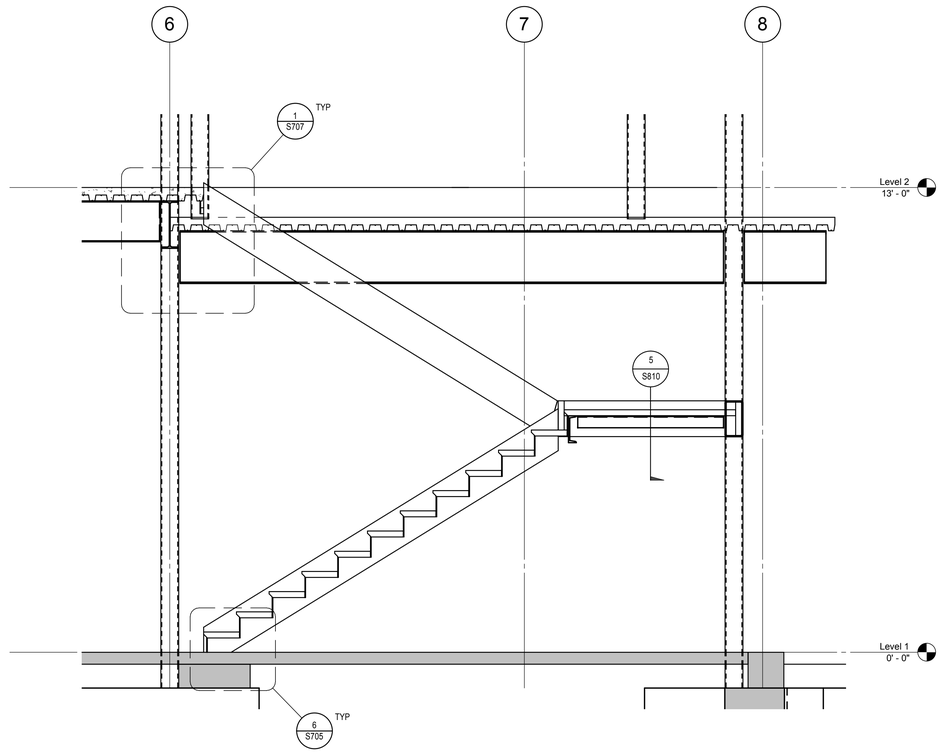

4 STAIR 2 SECTION

SCALE : 1/2" = 1'-0"

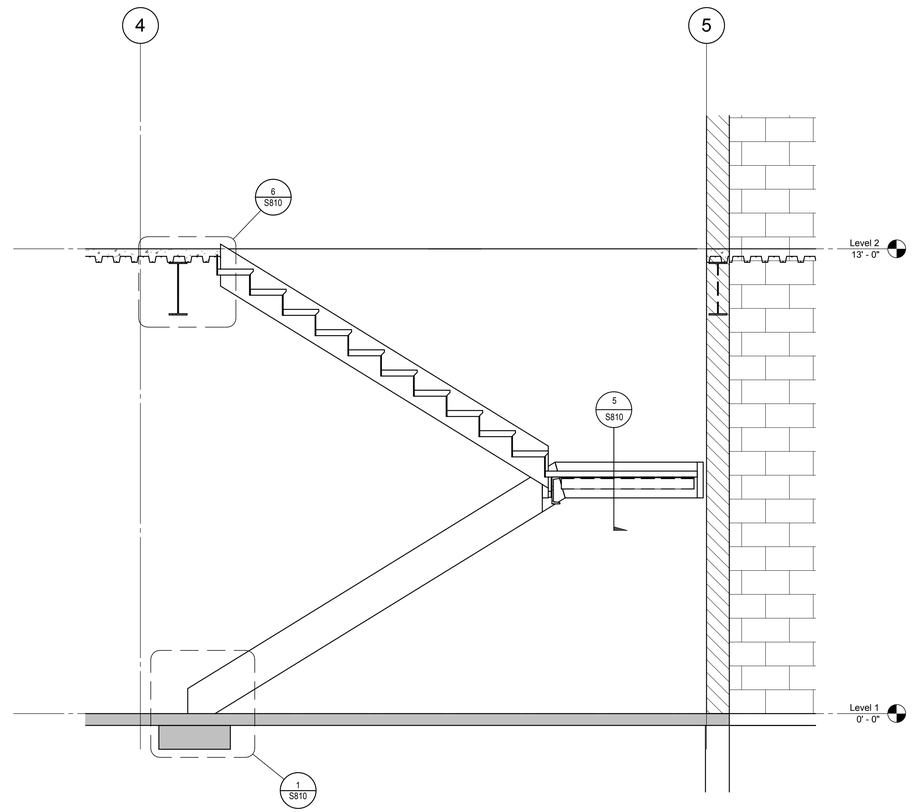

2 STAIR 1 SECTION

SCALE : 1/2" = 1'-0"

ARCHITECT:

COLE ARCHITECTS

COLE ARCHITECTS | 802 W. BANNOCK SUIT 208
Boise, ID 83702 | (208) 345-1800

TCA architecture • planning

TCA | 6211 Roosevelt Way NE
Seattle, WA 98115 | (206) 522-3820

STAMP:

NOT FOR CONSTRUCTION

CONSULTANT:

kpff

412 E. Parkcenter Blvd, Suite 204
Boise, ID 83706
O: 208.336.6985
www.kpff.com

PROJECT INFORMATION:

BOISE CITY OF TREES

BOISE FIRE Est. 1873 DEDICATION

City of Boise Fire Station 4

8485 W. Ustick Rd, Boise, ID 83704

REVISIONS:

MARK	DATE	DESCRIPTION

PROJECT PHASE	75% CD
PROJECT NUMBER	114747.01
PROJECT MANAGER	J. Chatfield
PROJECT ARCHITECT	J. Chatfield
DESIGN	J. Chatfield
DRAWN BY	Author

SHEET NAME:

STAIR PLANS AND SECTIONS

SHEET NUMBER:

S800

11.09.15

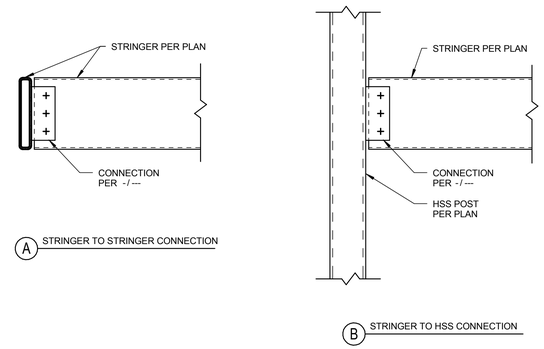

4 STRINGER CONNECTION DETAIL

SCALE : 1" = 1'-0"

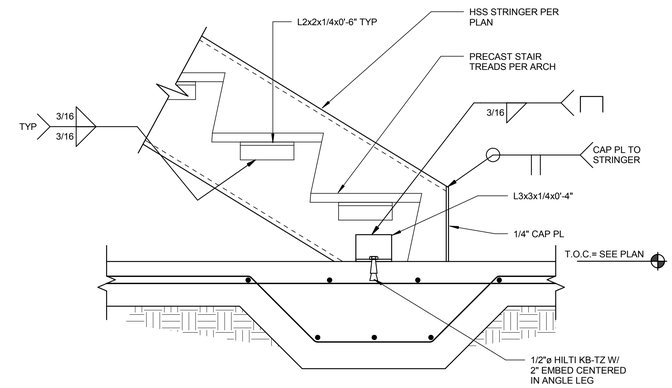

1 STAIR BASE DETAIL

SCALE : 1 1/2" = 1'-0"

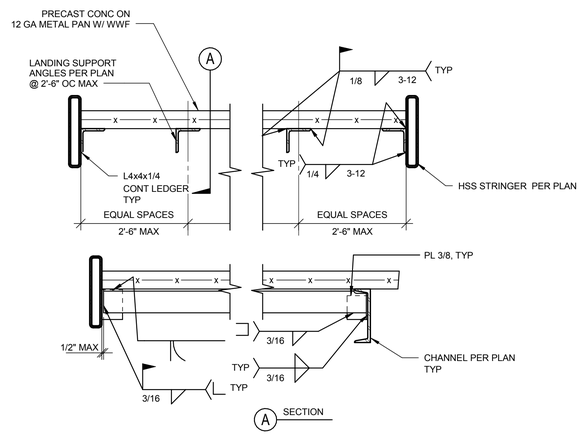

5 LANDING SECTION

SCALE : 1" = 1'-0"

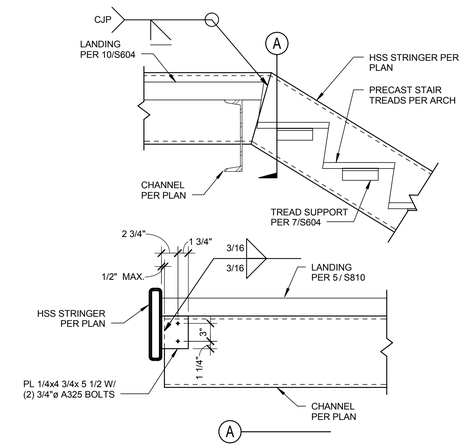

2 STRINGER DETAIL

SCALE : 1" = 1'-0"

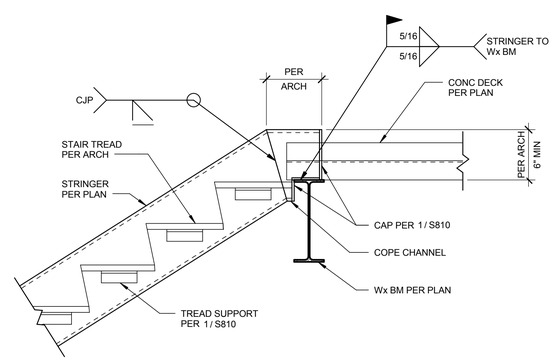

6 STRINGER TO Wx BEAM

SCALE : 1" = 1'-0"

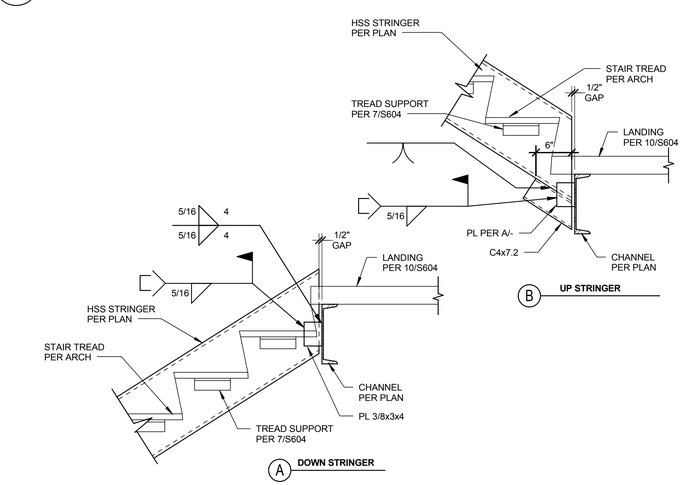

3 STRINGER CONNECTION DETAIL

SCALE : 1" = 1'-0"

ARCHITECT:

COLE ARCHITECTS

COLE ARCHITECTS | 802 W. BANNOCK SUIT 208
Boise, ID 83702 | (208) 345-1800

TCA architecture • planning

TCA | 6211 Roosevelt Way NE
Seattle, WA 98115 | (206) 522-3820

STAMP:

NOT FOR CONSTRUCTION

CONSULTANT:

kpff

412 E. Parkcenter Blvd, Suite 204
Boise, ID 83706
O: 208.336.6985
www.kpff.com

PROJECT INFORMATION:

BOISE CITY OF TREES

BOISE FIRE EST. 1870 DEDICATION

City of Boise Fire Station 4

8485 W. Ustick Rd, Boise, ID 83704

REVISIONS:

MARK	DATE	DESCRIPTION

PROJECT PHASE	75% CD
PROJECT NUMBER	114747.01
PROJECT MANAGER	J. Chatfield
PROJECT ARCHITECT	J. Chatfield
DESIGN	J. Chatfield
DRAWN BY	Author

SHEET NAME:

STAIR DETAILS

SHEET NUMBER:

S810

11.09.15

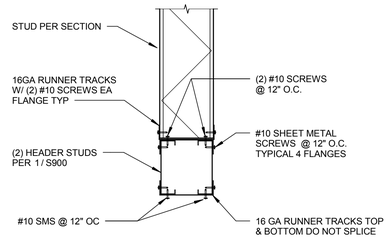

3A BUILT UP HEADERS

SCALE : 1 1/2" = 1'-0"

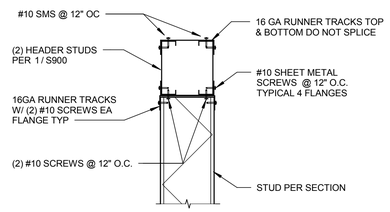

3B BUILT-UP SILL

SCALE : 1 1/2" = 1'-0"

3 HEADER AND SILL DETAILS

SCALE : 1 1/2" = 1'-0"

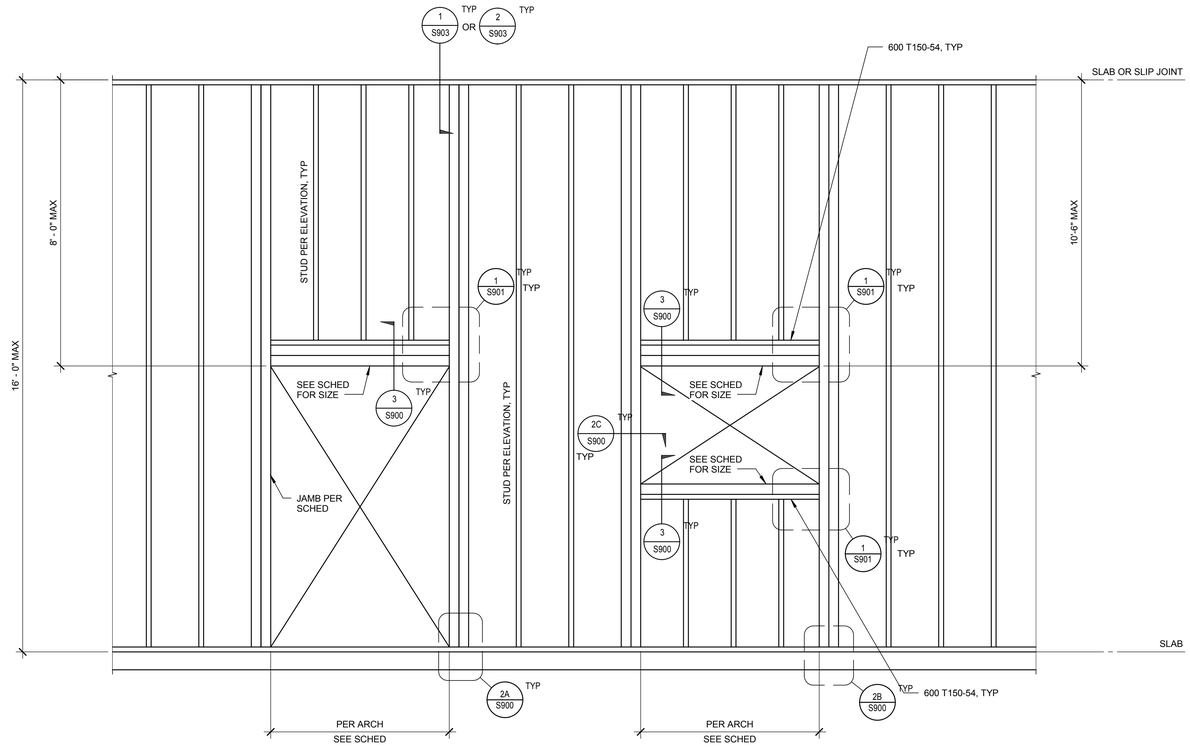

SCHEDULE			
WIDTH OF OPENING	JAMB SIZE	HEADER SIZE	SILL SIZE
3'-4" MAX	(2) 600S162-54	(2) 600S162-54	N/A, DOORS ONLY
6'-4" MAX	(2) 600S200-54	(2) 600S162-54	(2) 600S162-54
12'-4" MAX	(2) 600S350-54	(2) 600S300-54	(2) 600S300-54
14'-4" MAX	(2) 600S350-54	(2) 600S300-54	(2) 600S300-54

1 EXTERIOR WALL ELEVATION AT OPENINGS

SCALE : 1/2" = 1'-0"

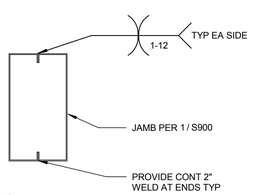

DOUBLE JAMB

NOTE:
1. SHOWN WELD TYP AT ALL BOXED JAMB SECTIONS.

2C TYPICAL JAM STUD DETAIL

SCALE : 3" = 1'-0"

2 JAMB DETAILS

SCALE : 1 1/2" = 1'-0"

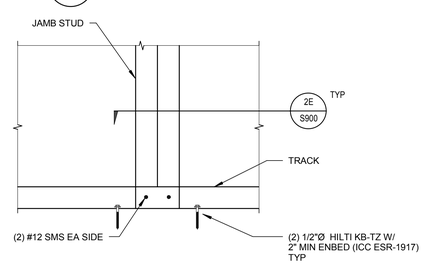

2B ANCHORAGE DETAIL - CENTER CONDITION

SCALE : 1 1/2" = 1'-0"

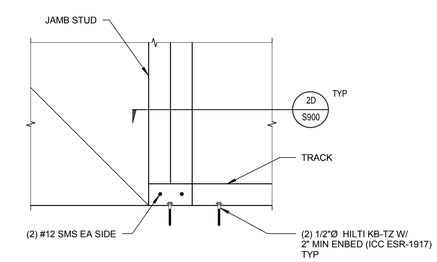

2A ANCHORAGE DETAIL - EDGE CONDITION

SCALE : 1 1/2" = 1'-0"

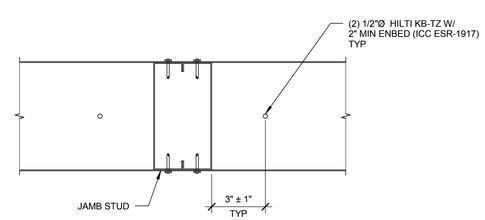

2E SECTION

SCALE : 3" = 1'-0"

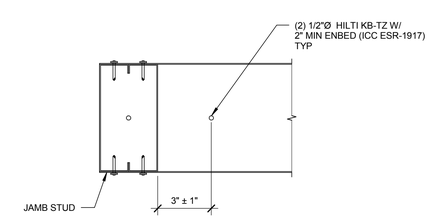

2D SECTION

SCALE : 3" = 1'-0"

ARCHITECT:

COLE ARCHITECTS

COLE ARCHITECTS | 802 W. BANNOCK SUIT 208
Boise, ID 83702 | (208) 345-1800

TCA architecture • planning

TCA | 6211 Roosevelt Way NE
Seattle, WA 98115 | (206) 522-3820

STAMP:

NOT FOR CONSTRUCTION

CONSULTANT:

kpff

412 E. Parkcenter Blvd, Suite 204
Boise, ID 83706
O: 208.336.6985
www.kpff.com

PROJECT INFORMATION:

BOISE CITY OF TREES

BOISE FIRE EST. 1891 DEDICATION

City of Boise Fire Station 4

8485 W. Ustick Rd, Boise, ID 83704

REVISIONS:

MARK	DATE	DESCRIPTION

PROJECT PHASE	75% CD
PROJECT NUMBER	114747.01
PROJECT MANAGER	J. Chatfield
PROJECT ARCHITECT	J. Chatfield
DESIGN	J. Chatfield
DRAWN BY	Author

SHEET NAME:

EXTERIOR WALL TYPICAL DETAILS

SHEET NUMBER:

S900

11.09.15

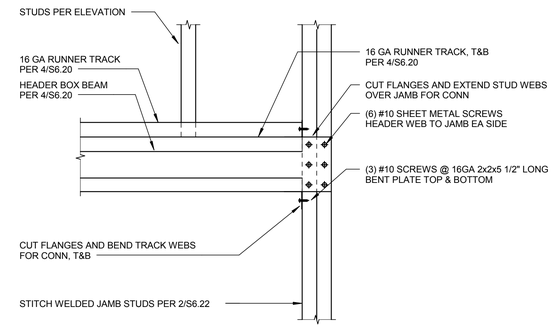

1 TYPICAL HEADER/SILL TO JAMB CONNECTION

SCALE : 1 1/2" = 1'-0"

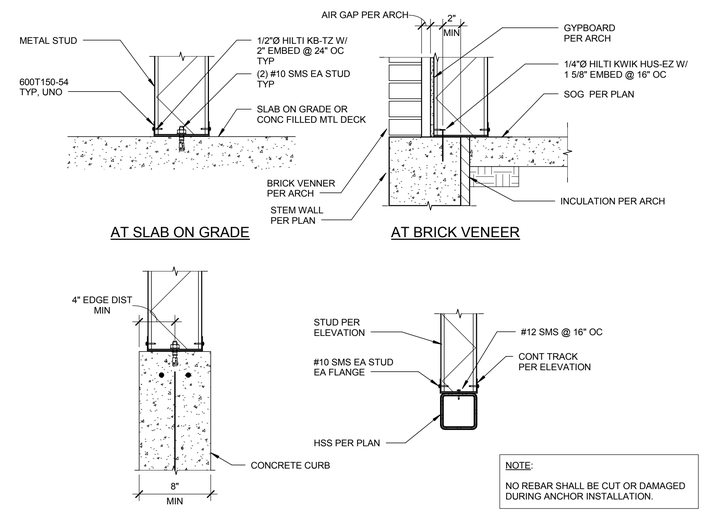

AT SLAB ON GRADE

AT BRICK VENEER

AT CURB

AT STEEL BEAM

NOTE:

NO REBAR SHALL BE CUT OR DAMAGED DURING ANCHOR INSTALLATION.

2 WALL SILL ATTACHMENT DETAIL

SCALE : 1 1/2" = 1'-0"

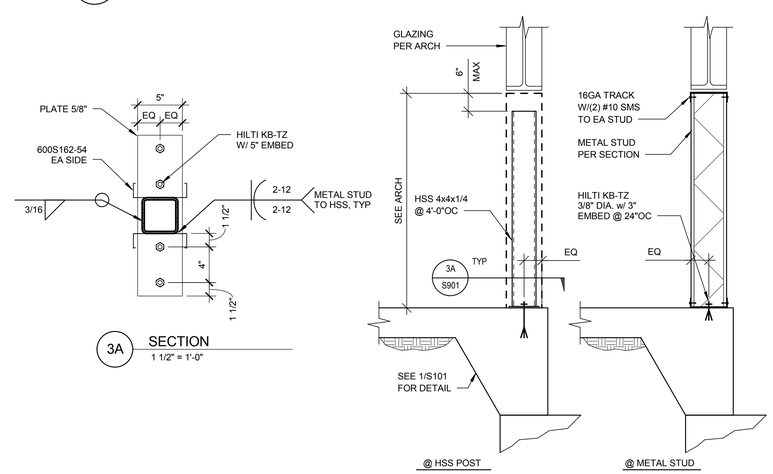

3 WINDOW SILL DETAIL

SCALE : 1" = 1'-0"

ARCHITECT:

COLE ARCHITECTS

COLE ARCHITECTS | 802 W. BANNOCK SUIT 208
Boise, ID 83702 | (208) 345-1800

TCA architecture • planning

TCA | 6211 Roosevelt Way NE
Seattle, WA 98115 | (206) 522-3820

STAMP:

NOT FOR CONSTRUCTION

CONSULTANT:

kpff

412 E. Parkcenter Blvd, Suite 204
Boise, ID 83706
O: 208.336.6985
www.kpff.com

PROJECT INFORMATION:

City of Boise Fire Station 4

8485 W. Ustick Rd, Boise, ID 83704

REVISIONS:

MARK	DATE	DESCRIPTION

PROJECT PHASE	75% CD
PROJECT NUMBER	114747.01
PROJECT MANAGER	J. Chatfield
PROJECT ARCHITECT	J. Chatfield
DESIGN	J. Chatfield
DRAWN BY	Author

SHEET NAME:

EXTERIOR WALL
TYPICAL DETAILS

SHEET NUMBER:

S901

11.09.15

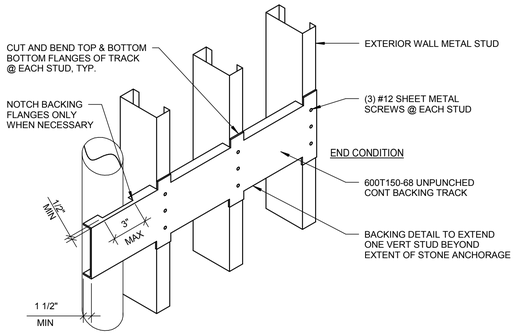

3 STEEL STUD BACKING DETAIL

SCALE : 1" = 1'-0"

NOTES:

1. LATERAL BRACING OF METAL STUDS REQUIRED WHEN GYP BOARD IS NOT PROVIDED ON BOTH SIDES OF METAL STUD.
2. BRIDGING/BRACING TO BE SPACED AT 4'-0"OC MAX VERTICALLY.
3. WHERE ARCHITECTURAL DRAWINGS DO NOT REQUIRE GYP BOARD TO EXTEND THE FULL WALL HEIGHT, LATERAL BRACING IS REQUIRED WHERE 'X' EXCEEDS 4'-0".
4. SEE DETAIL 2 / S902 FOR ALTERNATE BRACING OPTIONS.
5. #12 SMS MAY BE USED IN LIEU OF #10 SMS SHOWN.

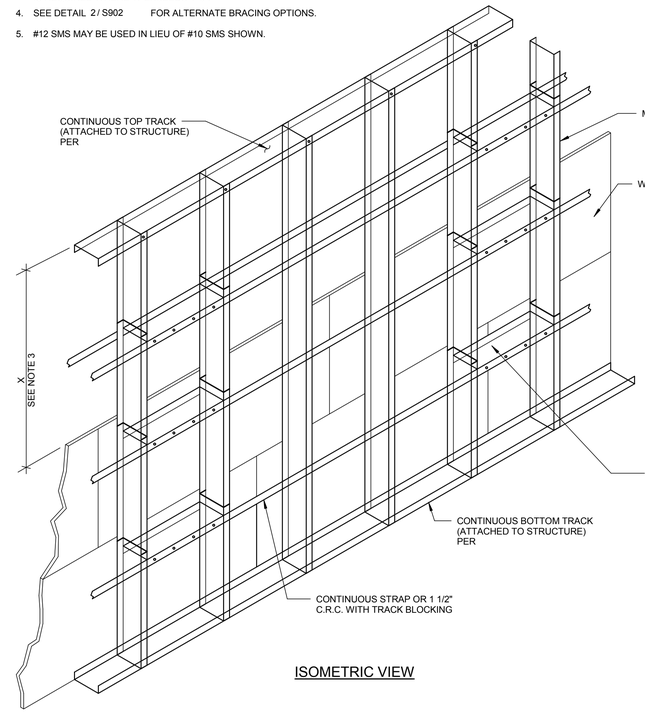

ISOMETRIC VIEW

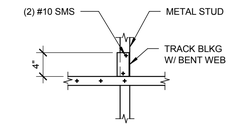

SIDE VIEW

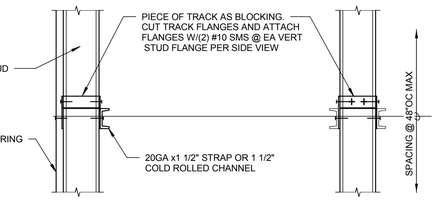

SECTION THROUGH STRAP BRACING

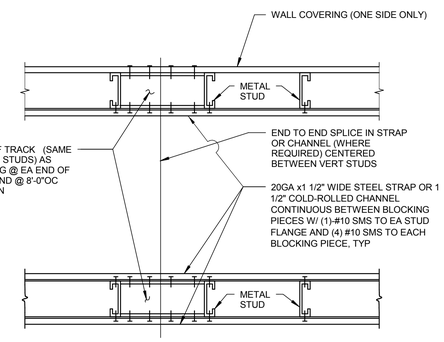

PLAN VIEW

1 METAL STUD BRACING DETAIL

SCALE : 1" = 1'-0"

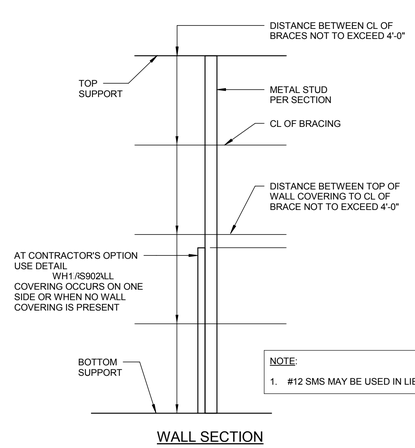

NOTE:

1. #12 SMS MAY BE USED IN LIEU OF #10 SMS SHOWN.

WALL SECTION

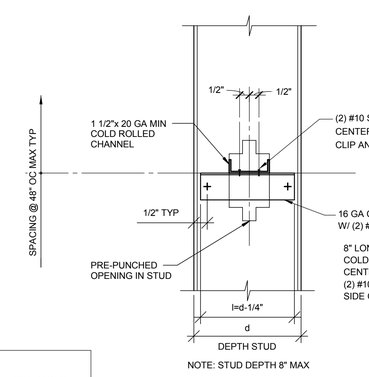

NOTE: STUD DEPTH 8" MAX

TYPICAL BRACING

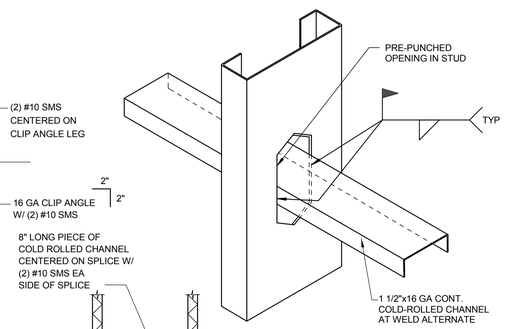

WELD ALTERNATE

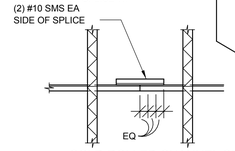

COLD ROLLED CHANNEL SPLICE DETAIL

2 ALTERNATE WALL BRACING DETAIL

SCALE : NTS

ARCHITECT:

COLE ARCHITECTS

COLE ARCHITECTS | 802 W. BANNOCK SUIT 208
Boise, ID 83702 | (208) 345-1800

TCA architecture • planning

TCA | 6211 Roosevelt Way NE
Seattle, WA 98115 | (206) 522-3820

STAMP:

NOT FOR CONSTRUCTION

CONSULTANT:

kpff

412 E. Parkcenter Blvd, Suite 204
Boise, ID 83706
O: 208.336.6985
www.kpff.com

PROJECT INFORMATION:

BOISE CITY OF TREES

BOISE FIRE Est. 1870 DEDICATION

City of Boise Fire Station 4

8485 W. Ustick Rd, Boise, ID 83704

REVISIONS:

MARK	DATE	DESCRIPTION

PROJECT PHASE	75% CD
PROJECT NUMBER	114747.01
PROJECT MANAGER	J. Chatfield
PROJECT ARCHITECT	J. Chatfield
DESIGN	J. Chatfield
DRAWN BY	Author

SHEET NAME:

EXTERIOR WALL TYPICAL DETAILS

SHEET NUMBER:

S902

11.09.15

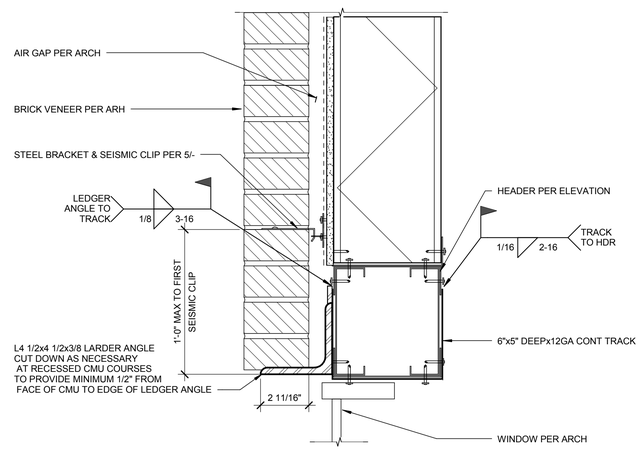

3 BRICK LEDGER ANGLE

SCALE : 3" = 1'-0"

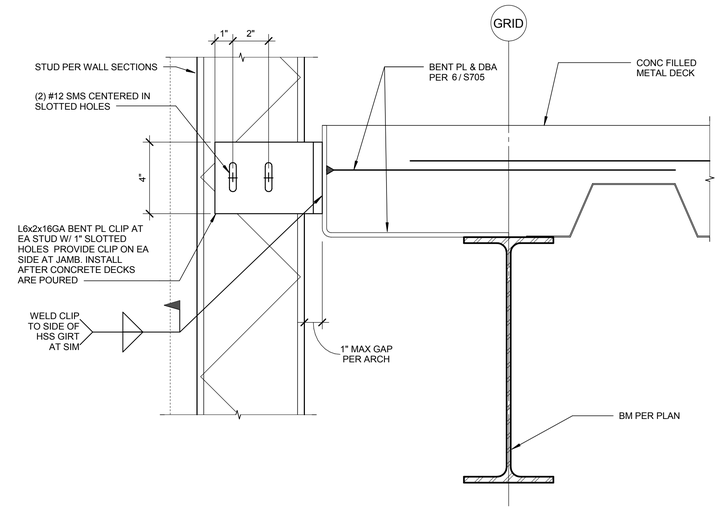

1 TYPICAL METAL STUD CONN TO CONC DECK

SCALE : 3" = 1'-0"

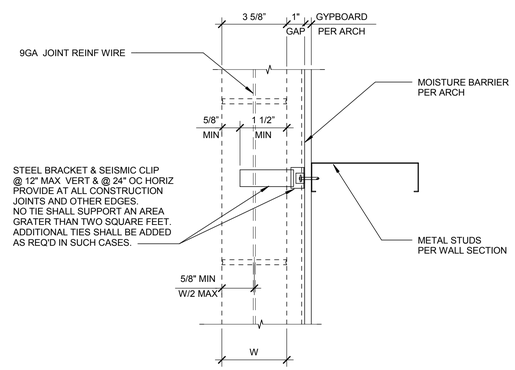

4A SECTION

SCALE : 3" = 1'-0"

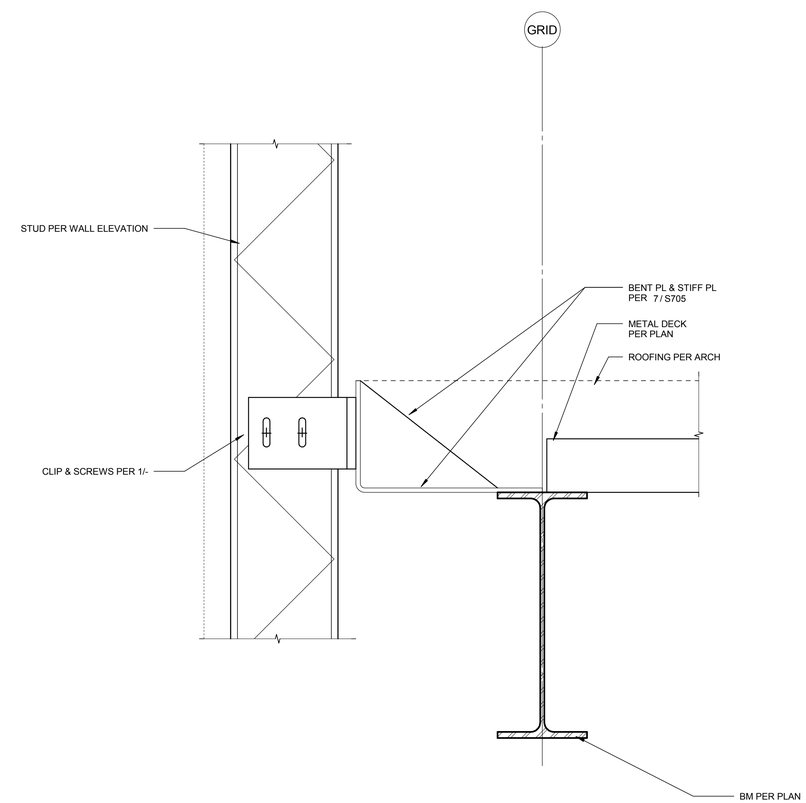

2 TYPICAL METAL STUD CONN TO METAL DECK

SCALE : 3" = 1'-0"

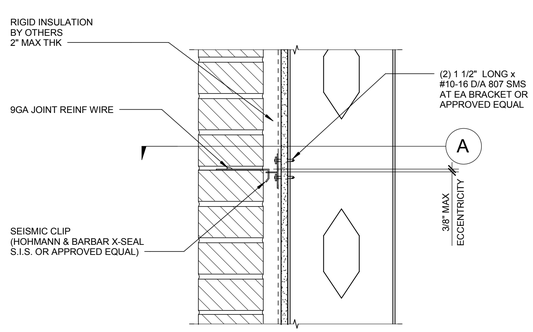

4 TYPICAL BRICK METAL STUD CONN

SCALE : 3" = 1'-0"

ARCHITECT:

COLE ARCHITECTS

COLE ARCHITECTS | 802 W. BANNOCK SUIT 208
Boise, ID 83702 | (208) 345-1800

TCA

architecture • planning

TCA | 6211 Roosevelt Way NE
Seattle, WA 98115 | (206) 522-3820

STAMP:

NOT FOR CONSTRUCTION

CONSULTANT:

kpff

412 E. Parkcenter Blvd, Suite 204
Boise, ID 83706
O: 208.336.6985
www.kpff.com

PROJECT INFORMATION:

BOISE CITY OF TREES

BOISE FIRE EST. 1873 DEDICATION

City of Boise Fire Station 4

8485 W. Ustick Rd, Boise, ID 83704

REVISIONS:

MARK	DATE	DESCRIPTION

PROJECT PHASE	75% CD
PROJECT NUMBER	114747.01
PROJECT MANAGER	J. Chatfield
PROJECT ARCHITECT	J. Chatfield
DESIGN	J. Chatfield
DRAWN BY	Author

SHEET NAME:

EXTERIOR WALL TYPICAL DETAILS

SHEET NUMBER:

S903

11.09.15

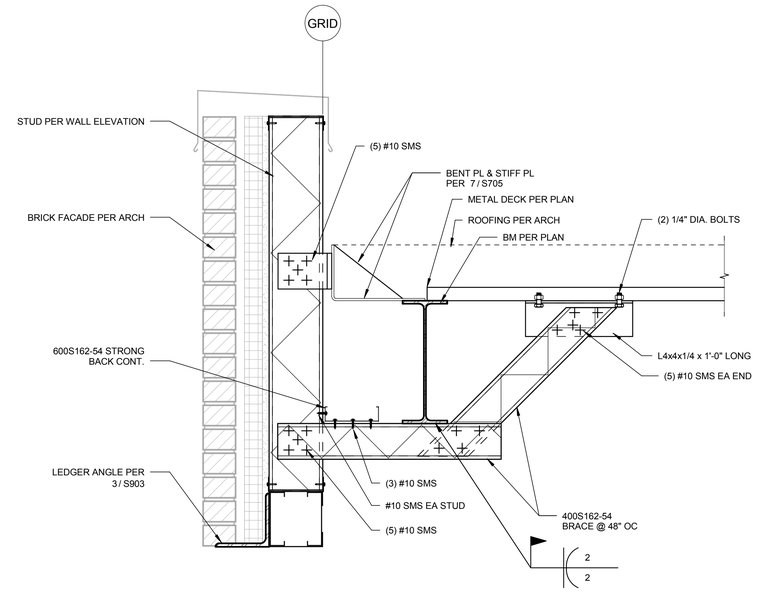

1 TYPICAL ROOF LEVEL SPANDREL FRAMING

SCALE : 1 1/2" = 1'-0"

ARCHITECT:

COLE ARCHITECTS

COLE ARCHITECTS | 802 W. BANNOCK SUIT 208
Boise, ID 83702 | (208) 345-1800

TCA
architecture • planning

TCA | 6211 Roosevelt Way NE
Seattle, WA 98115 | (206) 522-3820

STAMP:

NOT FOR CONSTRUCTION

CONSULTANT:

kpff
412 E. Parkcenter Blvd, Suite 204
Boise, ID 83706
O: 208.336.6985
www.kpff.com

PROJECT INFORMATION:

BOISE CITY OF TREES

BOISE FIRE EST. 1910 DEDICATION

City of Boise Fire Station 4

8485 W. Ustick Rd, Boise, ID 83704

REVISIONS:

MARK	DATE	DESCRIPTION

PROJECT PHASE	75% CD
PROJECT NUMBER	114747.01
PROJECT MANAGER	J. Chatfield
PROJECT ARCHITECT	J. Chatfield
DESIGN	J. Chatfield
DRAWN BY	Author

SHEET NAME:

EXTERIOR WALL
TYPICAL DETAILS

SHEET NUMBER:

S904

11.09.15

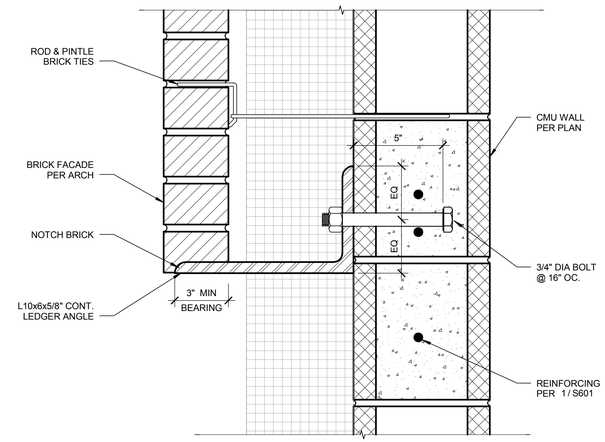

1 RELIEF ANGLE AT CMU WALL

SCALE : 3" = 1'-0"

ARCHITECT:

COLE ARCHITECTS

COLE ARCHITECTS | 802 W. BANNOCK SUIT 208
Boise, ID 83702 | (208) 345-1800

TCA

architecture • planning

TCA | 6211 Roosevelt Way NE
Seattle, WA 98115 | (206) 522-3820

STAMP:

NOT FOR CONSTRUCTION

CONSULTANT:

kpff

412 E. Parkcenter Blvd, Suite 204
Boise, ID 83706
O: 208.336.6985
www.kpff.com

PROJECT INFORMATION:

BOISE CITY OF TREES

BOISE FIRE EST. 1910 DEDICATION

City of Boise Fire Station 4

8485 W. Ustick Rd, Boise, ID 83704

REVISIONS:

MARK	DATE	DESCRIPTION

PROJECT PHASE	75% CD
PROJECT NUMBER	114747.01
PROJECT MANAGER	J. Chatfield
PROJECT ARCHITECT	J. Chatfield
DESIGN	J. Chatfield
DRAWN BY	Author

SHEET NAME:

TYPICAL EXTERIOR WALL DETAILS

SHEET NUMBER:

S905

11.09.15

MECHANICAL ABBREVIATIONS

A/C or AC	AIR CONDITIONING	IFGC	INTERNATIONAL FUEL GAS CODE
AFF	ABOVE FINISHED FLOOR	IMC	INTERNATIONAL MECHANICAL CODE
AHU	AIR HANDLING UNIT	IPC	INTERNATIONAL PLUMBING CODE
ASHRAE	AMERICAN SOCIETY OF HEATING, REFRIGERATION, AND AIR CONDITIONING ENGINEERS	KW	KILOWATT
AV	ACID VENT LINE	KWH	KILOWATT HOUR
AW	ACID WASTE LINE		
		L	LIQUID REFRIGERANT LINE
BTU	BRITISH THERMAL UNITS	LAT	LEAVING AIR TEMPERATURE
BTUH	BTUS PER HOUR	LAV	LAVATORY
		LEED	LEADERSHIP IN ENERGY & ENVIRONMENTAL DESIGN
CA	COMBUSTION AIR	LWT	LEAVING WATER TEMPERATURE
CC	COOLING COIL		
CD	CONDENSATE DRAIN LINE	M	MOTORIZED DAMPER
CDR	CONDENSER WATER RETURN	MAX	MAXIMUM
CDS	CONDENSER WATER SUPPLY	MCA	MINIMUM CIRCUIT AMPS
CFM	AIR FLOW RATE (CUBIC FEET PER MINUTE)	MIN	MINIMUM
CLG	CEILING	MOCP	MAXIMUM OVERCURRENT PROTECTION
CW	DOMESTIC COLD WATER	MPG	MEDIUM PRESSURE NATURAL GAS
CWR	CHILLED WATER RETURN		
CWS	CHILLED WATER SUPPLY	NC	NOISE CRITERIA
		NFPA	NATIONAL FIRE PROTECTION ASSOCIATION
DEG or °	DEGREE	NTS	NOT TO SCALE
DIA or ø	DIAMETER		
DB	DRY BULB	OD	OVERFLOW DRAIN LINE
DWR	DOMESTIC HOT WATER RETURN	OSA	OUTSIDE AIR
EA	EXHAUST AIR	PD	PRESSURE DROP
EAT	ENTERING AIR TEMPERATURE	PH or !	PHASE
EER	ENERGY EFFICIENCY RATIO	PRV	PRESSURE REDUCING VALVE
ESP	EXTERNAL STATIC PRESSURE		
EWT	ENTERING WATER TEMPERATURE	RA	RETURN AIR
		RD	ROOF DRAIN LINE
F	FIRE SPRINKLER LINE	RPM	REVOLUTIONS PER MINUTE
FCO	FLOOR CLEANOUT	RTU	ROOFTOP UNIT
FD	FIRE DAMPER		
FLA	FULL LOAD AMPS	S	SUCTION REFRIGERANT LINE
FLR	FLOOR	SA	SUPPLY AIR
FPM	FEET PER MINUTE	SD	STORM DRAIN LINE
FS	FLOW SWITCH	SEER	SEASONAL ENERGY EFFICIENCY RATIO
FT	FEET	SFD	COMBINATION SMOKE/FIRE DAMPER
		SP	STATIC PRESSURE
G	LOW PRESSURE NATURAL GAS	SYM	SYMBOL
GA	GAUGE		
GCO	GRADE CLEANOUT	T & P	TEMPERATURE AND PRESSURE
GPM	WATER FLOW RATE (GALLONS PER MINUTE)	TEMP	TEMPERATURE
GWR	GEOTHERMAL WATER RETURN	TS	TEMPERATURE SENSOR (DUCT OR PIPING)
GWS	GEOTHERMAL WATER SUPPLY	TYP	TYPICAL
HC	HEATING COIL	UPC	UNIFORM PLUMBING CODE
HP	HORSE POWER	U	URINAL
HVAC	HEATING, VENTILATING, AIR CONDITIONING		
HW	DOMESTIC HOT WATER	VTR	VENT THROUGH ROOF
HWR	HEATING WATER RETURN	V	VOLTS
HWS	HEATING WATER SUPPLY		
		WB	WET-BULB
IBC	INTERNATIONAL BUILDING CODE	WC	WATER CLOSET
IECC	INTERNATIONAL ENERGY CONSERVATION CODE	WCO	WALL CLEANOUT
IFC	INTERNATIONAL FIRE CODE	WH	WATER HEATER

NOTE: THIS IS A STANDARD LIST OF COMMONLY USED MECHANICAL ABBREVIATIONS. SOME OF THE ABBREVIATIONS SHOWN ABOVE MAY NOT BE USED IN THIS DRAWING PACKAGE.

MECHANICAL GENERAL NOTES

1. ALL MECHANICAL EQUIPMENT AND SYSTEMS SHALL BE INSTALLED IN ACCORDANCE WITH THE INTERNATIONAL MECHANICAL CODE (IMC) LATEST EDITION, AND ALL LOCAL & STATE CODES.
2. ALL PLUMBING EQUIPMENT AND SYSTEMS SHALL BE INSTALLED IN ACCORDANCE WITH THE IDAHO STATE PLUMBING CODE LATEST EDITION, AND ALL LOCAL & STATE CODES.
3. ALL MECHANICAL AND PLUMBING EQUIPMENT SHALL BE INSTALLED PER THE MANUFACTURER'S RECOMMENDATIONS.
4. MECHANICAL CONTRACTORS SHALL RECEIVE PRIOR APPROVAL FROM THE STRUCTURAL ENGINEER BEFORE MAKING CUTS THROUGH ANY STRUCTURAL MEMBER.
5. MECHANICAL CONTRACTORS SHALL COORDINATE INSTALLATION WITH CONSTRUCTION SUPERVISOR AND WITH ALL OTHER TRADES TO AVOID CONFLICTS.
6. THE MECHANICAL CONTRACTORS SHALL VERIFY MOTOR VOLTAGES WITH THE ELECTRICAL DRAWINGS BEFORE ORDERING MOTORIZED EQUIPMENT AND CONTROLS.
7. SEE SHEET M401 FOR SCHEDULED CAPACITIES OF ALL MECHANICAL EQUIPMENT AND MATERIALS SPECIFIED.
8. DOMESTIC WATER SERVICE IS PROVIDED WITH A DOUBLE CHECK BACKFLOW PREVENTER.
9. ALL MECHANICAL EQUIPMENT TO BE PROPOSED MUST BE ON THE APPROVED LIST PRIOR TO SUBMITTALS. ALL APPROVED MANUFACTURERS MUST BE CAPABLE OF MEETING THE REQUIREMENTS OF THE SPECIFIED EQUIPMENT.
10. RUNOUT AND HOOKUP SIZES TO INDIVIDUAL PLUMBING FIXTURE CAN BE FOUND ON THE PLUMBING FIXTURE SCHEDULES, SHEET P401.
11. PROVIDE REMOTE CEILING ACCESS BALANCE DAMPERS WITH CONCEALED CHROME PLATE COVERS FOR BALANCE DAMPERS LOCATED ABOVE HARD CEILINGS.
12. PAINT ALL VTR'S, FLUES, EXHAUST CAPS, AND OTHER MECHANICAL ITEMS ON THE ROOF TO MATCH THE ROOF COLOR.
13. INSULATED FLEXIBLE DUCTWORK MAY BE USED FOR RUNOUTS TO GRILLES AND DIFFUSERS, IN LENGTHS OF 6'-0" OR LESS.
14. MAINTAIN MINIMUM OF 10'-0" DISTANCE BETWEEN ALL FRESH AIR INTAKES AND EXHAUST OR GAS FLUE DISCHARGES.
15. THE PLUMBING CONTRACTOR IS RESPONSIBLE FOR ALL BACKFLOW DEVICES TO BE INSPECTED BY A CERTIFIED BACKFLOW TECHNICIAN BEFORE THE USE OF THE BUILDING POTABLE WATER SYSTEM.
16. LOCATE ACCESS HATCHES SO AS TO PROVIDE OPTIMUM SERVICEABILITY TO EQUIPMENT AND/OR VALVING. SEE ARCHITECTURAL SPECIFICATION FOR TYPE AND COLOR. COORDINATE LOCATION WITH STRUCTURAL & LIGHTING.
17. WHENEVER THERE IS A DISCREPANCY BETWEEN THE RUNOUT DUCT SIZE SHOWN ON THE PLANS AND THAT SHOWN IN THE SCHEDULE, ALWAYS USE THE LARGER OF THE TWO DUCT SIZES.

MECHANICAL AND PLUMBING DRAWINGS LEGEND

	FLEXIBLE DUCTWORK		THREE WAY CONTROL VALVE
	DUCTWORK		TWO WAY CONTROL VALVE
	DUCTWORK BREAK		PRESSURE REDUCING VALVE
	DUCTWORK OR PIPING RISE		GATE VALVE
	CONCENTRIC SQUARE TO ROUND TRANSITION		REDUCER
M	MOTORIZED DAMPER		GLOBE VALVE
	MANUAL VOLUME DAMPER		BALL VALVE
AIRFLOW	SPIN-IN FITTING W/ AIR EXTRACTOR AND HAND DAMPER		BUTTERFLY VALVE
AIRFLOW	HIGH EFFICIENCY FITTING W/ HAND DAMPER		BALANCE VALVE
$	SWITCH		CHECK VALVE
T	THERMOSTAT	FCO	FLOOR CLEANOUT
H	HUMIDISTAT	WCO	WALL CLEANOUT
S	TEMPERATURE SENSOR	GCO	GRADE CLEANOUT
CO2	CARBON DIOXIDE SENSOR		WATER HAMMER ARRESTOR
CO	CARBON MONOXIDE SENSOR		FLOOR DRAIN
NO	NITROUS OXIDE SENSOR		FLOOR SINK
SD	DUCT SMOKE DETECTOR		GAS PRESSURE REGULATOR W/ GAS COCK
	COMBINATION SMOKE/FIRE DAMPER		PRESSURE RELIEF VALVE
	FIRE DAMPER		VENT-THROUGH-ROOF
	SMOKE DAMPER		VENT
#	EQUIPMENT CALLOUT		SOIL, WASTE, OR SANITARY SEWER
	TURNING VANES	AW	ACID WASTE LINE
	INTAKE OR EXHAUST	AV	ACID VENT LINE
	DIRECTION OF AIRFLOW	SD	STORM DRAIN
D-	SUPPLY DIFFUSER	RD	ROOF DRAIN LINE
R- 1	RETURN GRILLE	OD	OVERFLOW DRAIN LINE
R- 1 1	EXHAUST GRILLE	CD	CONDENSATE DRAIN LINE
G- 1 1	FLOOR GRILLE		DOMESTIC COLD WATER (CW)
	CEILING EXHAUST FAN		DOMESTIC HOT WATER (HW)
	TEMPERATURE GAUGE		DOMESTIC HOT WATER RETURN (HWR)
	PRESSURE GAUGE (LIQUID FILLED W/ ISOLATION VALVE)	TW	TEMPERED WATER (TW)
TS	TEMPERATURE SENSOR (DUCT OR PIPING)	MPG	MEDIUM PRESSURE NATURAL GAS
FS	FLOW SWITCH	G	LOW PRESSURE NATURAL GAS
	STAINLESS STEEL BRAIDED FLEX CONNECTION	F	FIRE SPRINKLER LINE
	ELASTOMETRIC FLEX CONNECTOR	GWS	GEOTHERMAL WATER SUPPLY
	SUCTION DIFFUSER	GWR	GEOTHERMAL WATER RETURN
	Y TYPE STRAINER (1 1/2" OR LARGER PROVIDED W/ BLOW DOWN VALVE)	CWS	CHILLED WATER SUPPLY
	FLOW DIRECTION	CWR	CHILLED WATER RETURN
	DEMOLITION / EQUIPMENT TO BE REMOVED	CS	CONDENSER WATER SUPPLY
	NEW TO EXISTING CONNECTION POINT	CR	CONDENSER WATER RETURN
(E)	EXISTING	HWS	HEATING WATER SUPPLY
(F)	FUTURE	HWR	HEATING WATER RETURN
(N)	NEW	L	LIQUID REFRIGERANT LINE
	REDUCED PRESSURE BACKFLOW PREVENTER	S	SUCTION REFRIGERANT LINE
	DOUBLE CHECK BACKFLOW PREVENTER		SLOPE PIPE IN DIRECTION OF ARROW
	UNION		PIPE ANCHOR
	AIR VENT		PIPE GUIDE
	TRIPLE DUTY VALVE		CAP

NOTE: THIS IS A LIST OF COMMONLY USED MECHANICAL AND PLUMBING SYMBOLS. SOME OF THE SYMBOLS SHOWN ABOVE MAY NOT BE USED IN THIS DRAWING PACKAGE.

ENERGY CODE COMPLIANCE

A. COMPLIANCE WITH THE LATEST ADOPTED EDITION OF THE INTERNATIONAL ENERGY CONSERVATION CODE IS REQUIRED FOR THIS PROJECT. THESE NOTES COVER MANDATORY REQUIREMENTS OF THE CODE. ADDITIONAL REQUIREMENTS ARE NOTED ON THE DRAWINGS AND IN THE SPECIFICATIONS.

B. MINIMUM REQUIREMENTS FOR SUPPLY AND RETURN DUCTWORK INSULATION:

1. R-5: DUCTS LOCATED IN UNCONDITIONED SPACES (SPACE NEITHER HEATED NOR COOLED SUCH AS ABOVE CEILING SPACES, WALL SPACES, DUCT CHASES, SOFFITS, ATTICS, CRAWL SPACES, UNHEATED BASEMENTS, AND UNHEATED GARAGES).
2. R-8: DUCTS LOCATED OUTSIDE OF THE BUILDING'S INSULATION ENVELOPE (SUCH AS ABOVE THE ATTIC INSULATION).

TYPICAL INSULATION THICKNESS REQUIRED TO MEET THESE REQUIREMENTS:

1. FIBERGLASS DUCT WRAP: R-5 (2"), R-8 (3").
2. FIBERGLASS DUCT LINER: R-5 (1 1/2"), R-8 (2").

C. CONTRACTOR SHALL VERIFY WITH THE MANUFACTURER, THE R-VALUES OF THE ACTUAL INSULATION USED. R-VALUES SHALL BE INSTALLED VALUES.

D. WHERE DUCTS USED FOR COOLING ARE EXTERNALLY INSULATED, THE INSULATION SHALL BE COVERED WITH A VAPOR RETARDER HAVING A MAXIMUM PERMEANCE OF 0.05 PERM OR ALUMINUM FOIL HAVING A MINIMUM THICKNESS OF 2 MILS. INSULATION HAVING A PERMEANCE OF 0.05 PERMS OR LESS SHALL NOT BE REQUIRED TO BE COVERED. ALL JOINTS AND SEAMS SHALL BE SEALED TO MAINTAIN THE CONTINUITY OF THE VAPOR RETARDER.

E. ALL DUCT JOINTS, SEAMS, AND CONNECTIONS SHALL BE FASTENED AND SEALED WITH WELDS, GASKETS, ADHESIVES, MASTIC-PLUS-EMBEDDED-FABRIC SYSTEMS, OR TAPES. TAPES AND MASTICS SHALL BE LISTED AND LABELED PER UL181A OR UL181B. DUCT TAPE IS NOT PERMITTED AS A SEALANT ON ANY METAL DUCTS. DUCT CONNECTIONS TO FLANGES OR EQUIPMENT SHALL BE SEALED AND MECHANICALLY FASTENED.

F. MINIMUM REQUIREMENTS (THICKNESS) FOR PIPING INSULATION SHALL BE AS FOLLOWS:

FLUID	NOMINAL PIPE DIAMETER 1/2" TO 1 1/2"	2" AND ABOVE
1. REFRIGERANT	1 1/2"	1 1/2"

THE ABOVE INSULATION IS BASED ON HAVING A CONDUCTIVITY NOT EXCEEDING 0.27 BTU-INCH/HOUR-FT2-°F.

G. DOMESTIC HOT WATER PIPING SYSTEMS SHALL BE INSULATED WITH 1" INSULATION HAVING A CONDUCTIVITY NOT EXCEEDING 0.27 BTU-INCH/HOUR-FT2-°F.

H. DOMESTIC WATER HEATERS WHICH ARE NOT PROVIDED WITH INTEGRAL HEAT TRAPS AND SERVE NONCIRCULATING SYSTEMS SHALL BE PROVIDED WITH HEAT TRAPS ON THE SUPPLY AND DISCHARGE PIPING AT THE WATER HEATER.

I. DOMESTIC HOT WATER SYSTEMS WITH RECIRCULATION PUMPS OR ELECTRIC HEAT TRACE SHALL BE CONTROLLED THROUGH THE DDC SYSTEM.

J. AN OPERATING AND MAINTENANCE MANUAL SHALL BE PROVIDED PRIOR TO ISSUANCE OF A CERTIFICATE OF OCCUPANCY. THE O&M MANUAL SHALL CONTAIN THE FOLLOWING INFORMATION AS A MINIMUM:

1. EQUIPMENT CAPACITY (INPUT & OUTPUT).
2. EQUIPMENT OPERATING AND MAINTENANCE INSTRUCTIONS.
3. CONTROL SYSTEM MAINTENANCE AND CALIBRATION INFORMATION, INCLUDING WIRING DIAGRAMS, SCHEMATICS, AND CONTROL SEQUENCES.
4. CONTROL SYSTEM SETPOINTS SHALL BE SHOWN ON CONTROL DRAWINGS, AT CONTROL DEVICES, OR IN PROGRAMMING COMMENT ON DDC SYSTEMS.
5. A COMPLETE WRITTEN NARRATIVE ON HOW EACH MECHANICAL SYSTEM IS INTENDED TO OPERATE.

ARCHITECT:

COLE ARCHITECTS

COLE ARCHITECTS | 802 W. BANNOCK SUIT 208
Boise, ID 83702 | (208) 345-1800

TCA architecture • planning

TCA | 6211 Roosevelt Way NE
Seattle, WA 98115 | (206) 522-3820

STAMP:

PRELIMINARY

NOT FOR CONSTRUCTION
01-29-16

CONSULTANT:

MUSGROVE ENGINEERING, P.A.
234 S. Whisperwood Way
Boise, Idaho 83709
208.384.0585
www.musgrovepa.com
OVER 30 YEARS OF EXCELLENCE
project number: 15-061

PROJECT INFORMATION:

City of Boise Fire Station 4

8485 W Ustick Rd, Boise, ID 83704

REVISIONS:

MARK	DATE	DESCRIPTION

PROJECT PHASE	75% CD'S
PROJECT NUMBER	15-27
PROJECT MANAGER	J. Chatfield
PROJECT ARCHITECT	J. Chatfield
DESIGN	J. Chatfield
DRAWN BY	LR

SHEET NAME:

MECHANICAL COVER SHEET

SHEET NUMBER:

M000

12.07.15

ARCHITECT:

COLE ARCHITECTS

COLE ARCHITECTS | 802 W. BANNOCK SUIT 208
Boise, ID 83702 | (208) 345-1800

TCA

architecture • planning

TCA | 6211 Roosevelt Way NE
Seattle, WA 98115 | (206) 522-3820

STAMP:

PRELIMINARY

NOT FOR CONSTRUCTION
01-29-16

CONSULTANT:

MUSGROVE
ENGINEERING, P.A.
234 S. Whisperwood Way
Boise, Idaho 83709
208.384.0585
www.musgrovepa.com
OVER 30 YEARS OF EXCELLENCE

project number: 15-061

PROJECT INFORMATION:

BOISE CITY OF TREES

BOISE FIRE DEDICATION

City of Boise Fire Station 4

8485 W Ustick Rd, Boise, ID 83704

REVISIONS:

MARK	DATE	DESCRIPTION

PROJECT PHASE	75% CD'S
PROJECT NUMBER	15-27
PROJECT MANAGER	J. Chatfield
PROJECT ARCHITECT	J. Chatfield
DESIGN	J. Chatfield
DRAWN BY	LR

SHEET NAME:

MECHANICAL COMCHECK

SHEET NUMBER:

M001

12.07.15

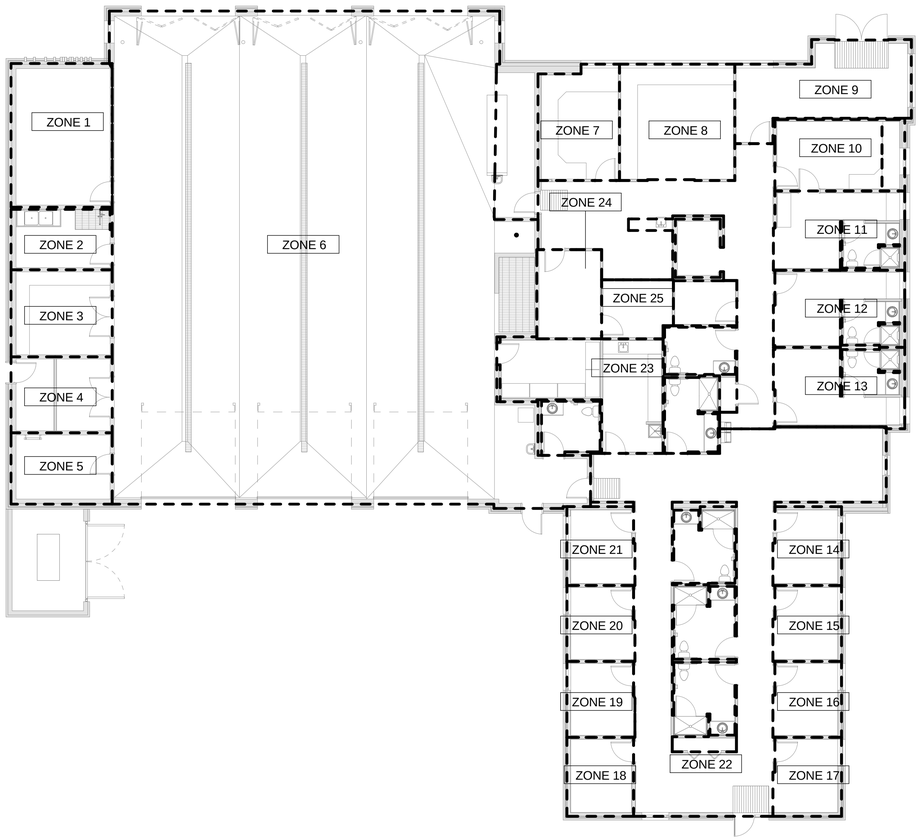

1ST FLOOR MECHANICAL ZONING PLAN
3/32" = 1'-0"

NORTH

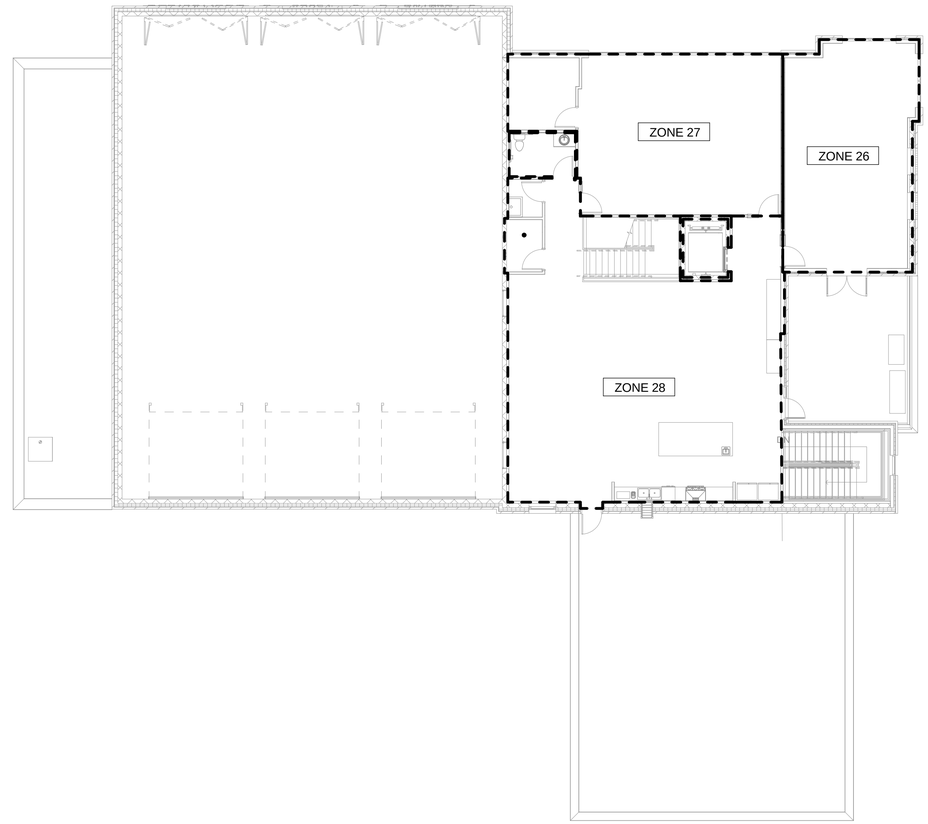

2ND FLOOR MECHANICAL ZONING PLAN
3/32" = 1'-0"

NORTH

ARCHITECT:

COLE ARCHITECTS

COLE ARCHITECTS | 802 W. BANNOCK SUIT 208
Boise, ID 83702 | (208) 345-1800

TCA

architecture • planning

TCA | 6211 Roosevelt Way NE
Seattle, WA 98115 | (206) 522-3820

STAMP:

PRELIMINARY

NOT FOR CONSTRUCTION
01-29-16

CONSULTANT:

MUSGROVE ENGINEERING, P.A.
234 S. Whisperwood Way
Boise, Idaho 83709
208.384.0585
www.musgrovepa.com
OVER 30 YEARS OF EXCELLENCE
project number: 15-061

PROJECT INFORMATION:

BOISE CITY OF TREES

BOISE FIRE EST. 1878 DEDICATION PROFESSIONALISM

City of Boise Fire Station 4

8485 W Ustick Rd, Boise, ID 83704

REVISIONS:

MARK	DATE	DESCRIPTION

PROJECT PHASE	75% CD'S
PROJECT NUMBER	15-27
PROJECT MANAGER	J. Chatfield
PROJECT ARCHITECT	J. Chatfield
DESIGN	J. Chatfield
DRAWN BY	LR

SHEET NAME:

MECHANICAL ZONING PLANS

SHEET NUMBER:

M002

12.07.15

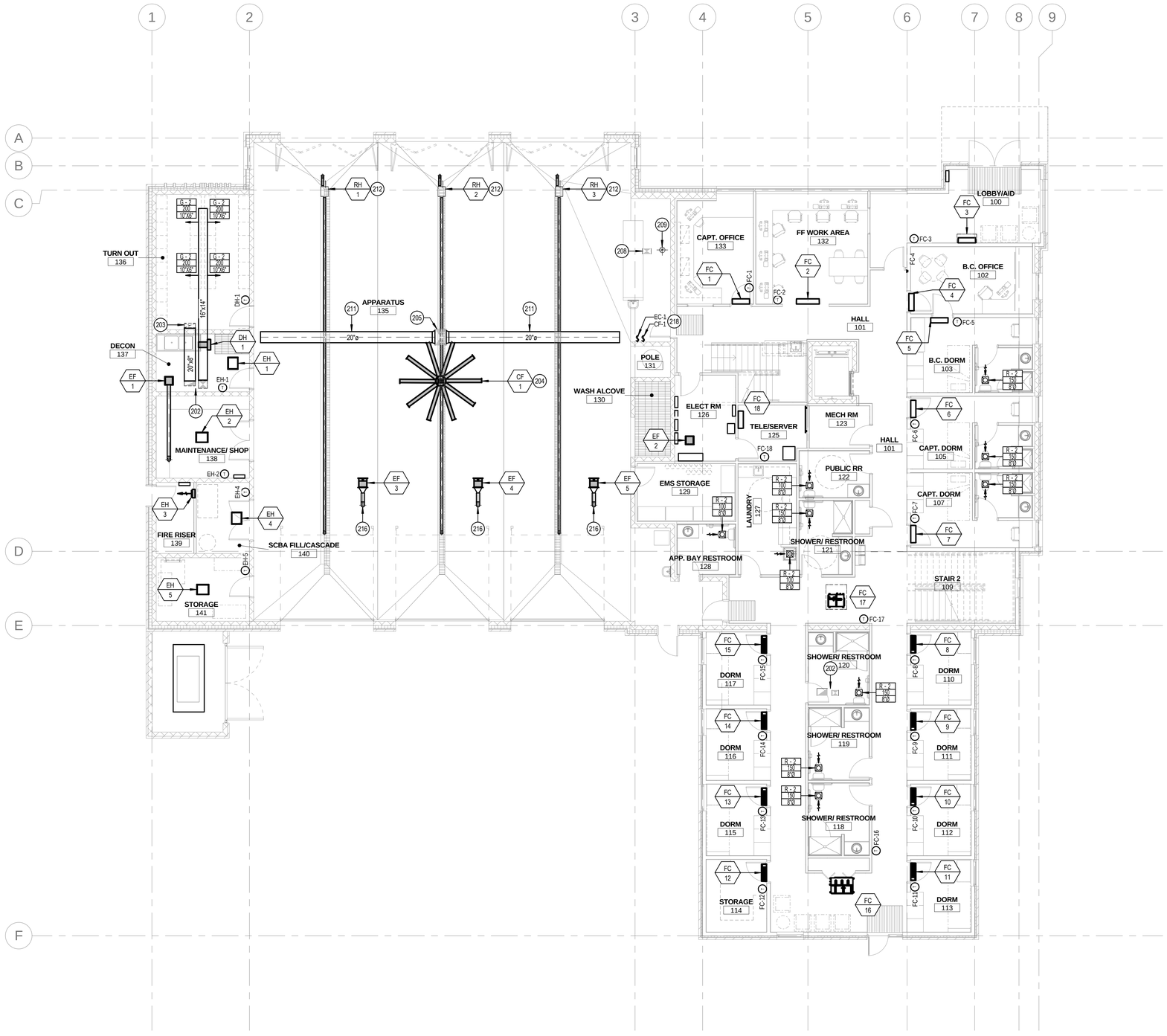

1ST FLOOR HVAC PLAN
1/8" = 1'-0"

NORTH

KEYED NOTES

202 SUPPLY AND EXHAUST DUCT UP THROUGH ROOF TO ENERGY RECOVERY UNIT. TRANSITION DUCTWORK AS REQUIRED TO MATCH UNIT OPENINGS. REFER TO HVAC ROOF PLAN FOR CONTINUATION.

203 20"X8" EXHAUST DUCT DOWN TIGHT TO WALL. TERMINATE DUCT 18" AFF. COVER WITH EXPANDED METAL SCREEN (MIN. OF 1" OPENINGS).

204 MOUNT FAN AT 6'-0" BELOW CEILING. COORDINATE EXACT LOCATION WITH ARCHITECT.

205 20"X30" SUPPLY DUCT UP THROUGH ROOF TO EVAPORATIVE COOLER. REFER TO HVAC ROOF PLAN FOR CONTINUATION.

208 ROUTE OUTSIDE AIR SUPPLY DUCT UP THROUGH FLOOR TO 2ND FLOOR CEILING SPACE. REFER TO 2ND FLOOR HVAC PLAN FOR CONTINUATION.

209 EXHAUST DUCT DOWN FROM ABOVE. REFER TO 2ND FLOOR HVAC PLAN FOR CONTINUATION.

211 ROUTE SUPPLY DUCT BETWEEN JOISTS AS HIGH AS POSSIBLE. DUCT SHALL BE PAINTLOCK SPIRAL. REFER TO SPIRAL DUCT SUPPORT DETAIL ON SHEET M301. REFER TO STRUCTURAL PLANS FOR CONNECTIONS TO STRUCTURAL MEMBERS.

212 GAS-FIRED RADIANT TUBE HEATER TO BE INSTALLED PER MANUFACTURER'S RECOMMENDATIONS. ROUTE 4"ø COMBUSTION AIR INTAKE UP THROUGH ROOF AS REQUIRED. REFER TO STRUCTURAL PLANS FOR CONNECTIONS TO STRUCTURAL MEMBERS.

216 MOUNT EXHAUST FAN ON UNISTRUT PER ARCHITECTURAL PLANS. ROUTE 6"ø TYPE 'B' DOUBLE WALL VENT FROM FAN OUTLET LOCATION UP THROUGH ROOF FOR EXHAUSTING OF VEHICLE EXHAUST SYSTEM. TERMINATE WITH ROOF CURB AND CAP. VEHICLE EXHAUST SYSTEM UPSTREAM OF EXHAUST FAN BY CITY OF BOISE. REFER TO ARCHITECTURAL PLANS FOR EXACT LOCATION AND FOR FURTHER REQUIREMENTS.

218 PROVIDE WALL SWITCH (ON/OFF) WITH PILOT LIGHT FOR FAN CONTROL, WALL SWITCH (ON/OFF) WITH PILOT LIGHT FOR ENERGIZING THE EVAPORATIVE COOLER, AND WALL SWITCH (ON/OFF) WITH PILOT LIGHT FOR OPERATION OF SOLENOID VALVE FOR DRAIN DOWN OF EVAPORATIVE COOLER. PENTHOUSE PH-1 DAMPER SHALL OPEN WHEN EVAPORATIVE COOLER FAN IS ENERGIZED.

ARCHITECT:

COLE ARCHITECTS

COLE ARCHITECTS | 802 W. BANNOCK SUIT 208
Boise, ID 83702 | (208) 345-1800

TCA
architecture • planning

TCA | 6211 Roosevelt Way NE
Seattle, WA 98115 | (206) 522-3820

STAMP:

PRELIMINARY
NOT FOR CONSTRUCTION
01-29-16

CONSULTANT:

MUSGROVE ENGINEERING, P.A.
234 S. Whisperwood Way
Boise, Idaho 83709
208.384.0585
www.musgrovepa.com
OVER 30 YEARS OF EXCELLENCE
project number: 15-061

PROJECT INFORMATION:

City of Boise Fire Station 4

8485 W Ustick Rd, Boise, ID 83704

REVISIONS:

MARK	DATE	DESCRIPTION

PROJECT PHASE	75% CD'S
PROJECT NUMBER	15-27
PROJECT MANAGER	J. Chatfield
PROJECT ARCHITECT	J. Chatfield
DESIGN	J. Chatfield
DRAWN BY	LR

SHEET NAME:

1ST FLOOR HVAC PLAN

SHEET NUMBER:

M101

12.07.15

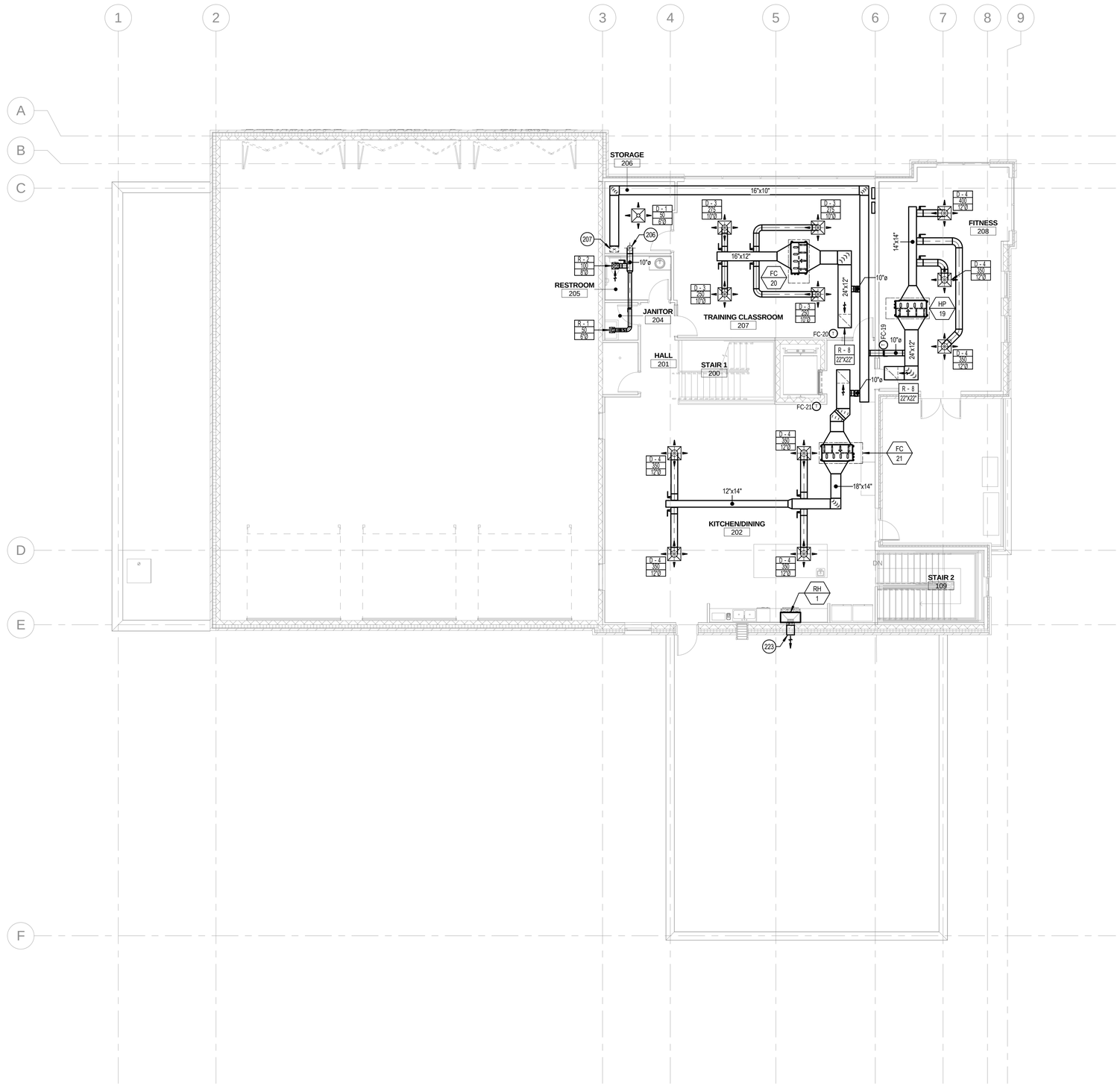

2ND FLOOR HVAC PLAN

1/8" = 1'-0"

NORTH

KEYED NOTES

206 EXHAUST DUCT DOWN IN CHASE TO FIRST FLOOR CEILING SPACE. REFER TO 1ST FLOOR HVAC PLAN FOR CONTINUATION.

207 OUTSIDE AIR SUPPLY DUCT UP FROM BELOW. REFER TO 1ST FLOOR HVAC PLAN FOR CONTINUATION.

223 ROUTE 3-1/4"X14" EXHAUST DUCT THROUGH EXTERIOR WALL AND TERMINATE WITH WALL CAP.

ARCHITECT:

COLE ARCHITECTS

COLE ARCHITECTS | 802 W. BANNOCK SUIT 208
Boise, ID 83702 | (208) 345-1800

TCA

architecture • planning

TCA | 6211 Roosevelt Way NE
Seattle, WA 98115 | (206) 522-3820

STAMP:

PRELIMINARY

NOT FOR CONSTRUCTION
01-29-16

CONSULTANT:

MUSGROVE ENGINEERING, P.A.
234 S. Whisperwood Way
Boise, Idaho 83709
208.384.0585
www.musgrovepa.com
OVER 30 YEARS OF EXCELLENCE
project number: 15-061

PROJECT INFORMATION:

City of Boise Fire Station 4

8485 W Ustick Rd, Boise, ID 83704

REVISIONS:

MARK	DATE	DESCRIPTION

PROJECT PHASE	75% CD'S
PROJECT NUMBER	15-27
PROJECT MANAGER	J. Chatfield
PROJECT ARCHITECT	J. Chatfield
DESIGN	J. Chatfield
DRAWN BY	LR

SHEET NAME:

2ND FLOOR HVAC PLAN

SHEET NUMBER:

M102

12.07.15

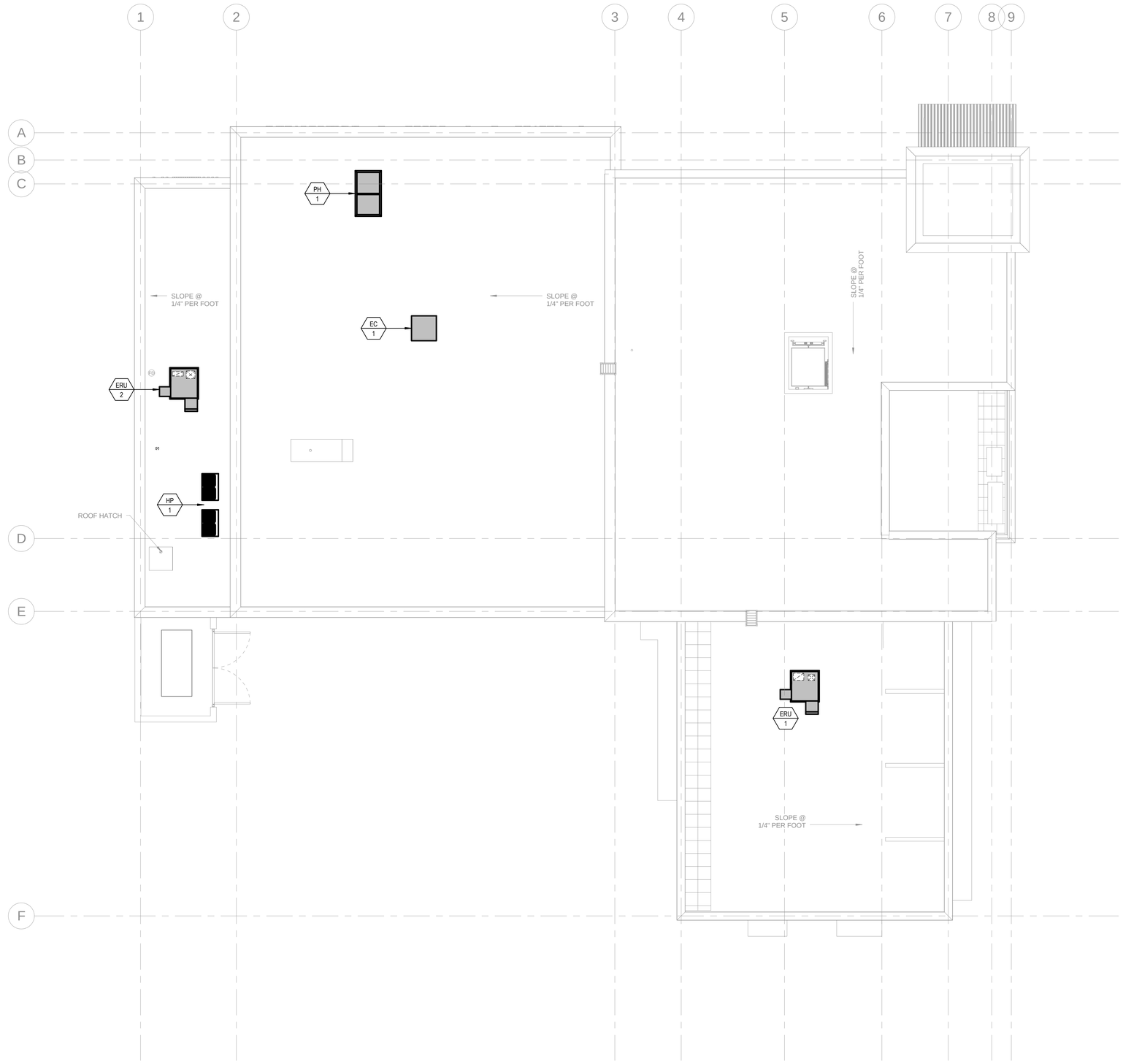

HVAC ROOF PLAN
1/8" = 1'-0"

NORTH

KEYED NOTES

ARCHITECT:

COLE ARCHITECTS

COLE ARCHITECTS | 802 W. BANNOCK SUIT 208
Boise, ID 83702 | (208) 345-1800

TCA architecture • planning

TCA | 6211 Roosevelt Way NE
Seattle, WA 98115 | (206) 522-3820

STAMP:

PRELIMINARY

NOT FOR CONSTRUCTION
01-29-16

CONSULTANT:

MUSGROVE
ENGINEERING, P.A.
234 S. Whisperwood Way
Boise, Idaho 83709
208.384.0585
www.musgrovepa.com
OVER 30 YEARS OF EXCELLENCE
project number: 15-061

PROJECT INFORMATION:

BOISE CITY OF TREES

BOISE FIRE EST. 1910 DEDICATION

City of Boise Fire Station 4

8485 W Ustick Rd, Boise, ID 83704

REVISIONS:

MARK	DATE	DESCRIPTION

PROJECT PHASE	75% CD'S
PROJECT NUMBER	15-27
PROJECT MANAGER	J. Chatfield
PROJECT ARCHITECT	J. Chatfield
DESIGN	J. Chatfield
DRAWN BY	LR

SHEET NAME:

HVAC ROOF PLAN

SHEET NUMBER:

M103

12.07.15

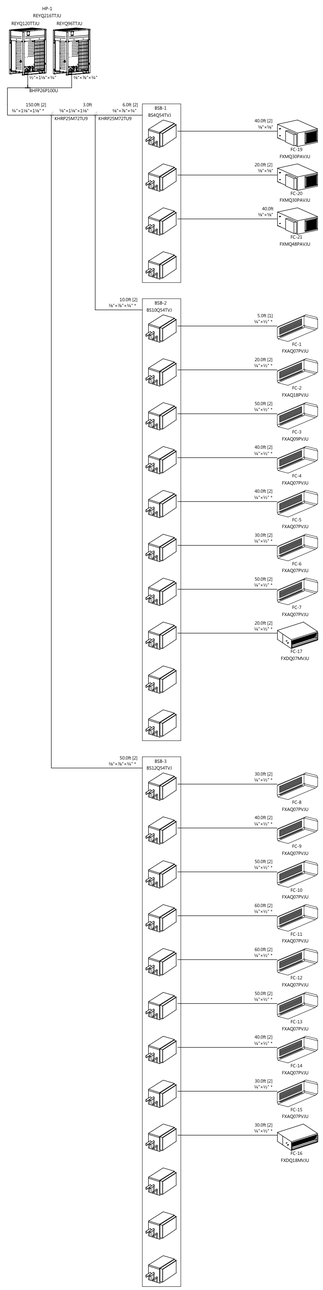

1 HP-1 HEAT PUMP PIPING DIAGRAM
NTS

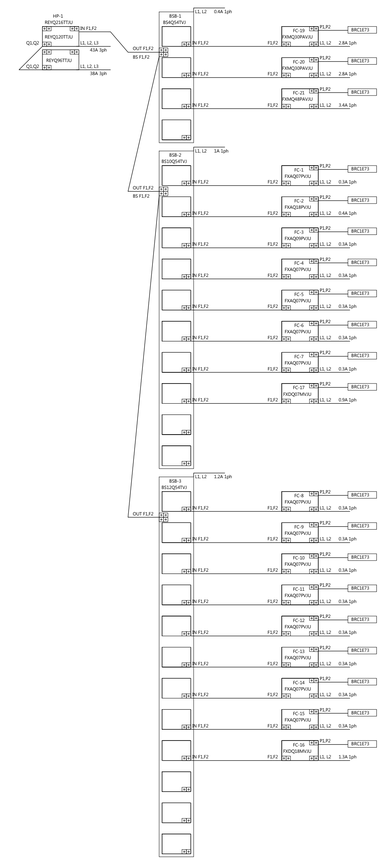

2 HP-1 HEAT PUMP WIRING DIAGRAM
NTS

ARCHITECT:

COLE ARCHITECTS

COLE ARCHITECTS | 802 W. BANNOCK SUIT 208
Boise, ID 83702 | (208) 345-1800

TCA

architecture • planning

TCA | 6211 Roosevelt Way NE
Seattle, WA 98115 | (206) 522-3820

STAMP:

PRELIMINARY

NOT FOR CONSTRUCTION
01-29-16

CONSULTANT:

MUSGROVE ENGINEERING, P.A.
234 S. Whisperwood Way
Boise, Idaho 83709
208.384.0585
www.musgrovepa.com
OVER 30 YEARS OF EXCELLENCE
project number: 15-061

PROJECT INFORMATION:

City of Boise Fire Station 4
8485 W Ustick Rd, Boise, ID 83704

REVISIONS:

MARK	DATE	DESCRIPTION

PROJECT PHASE	75% CD'S
PROJECT NUMBER	15-27
PROJECT MANAGER	J. Chatfield
PROJECT ARCHITECT	J. Chatfield
DESIGN	J. Chatfield
DRAWN BY	LR

SHEET NAME:

HVAC VRF PIPING & WIRING DIAGRAMS

SHEET NUMBER:

M201

12.07.15

NOTES:

1. FOR TAKE-OFFS LARGER THAN 12" DIAMETER, USE A FACTORY MANUFACTURED DAMPER. LOUVERS & DAMPERS, INC. MODEL CD-600 WITH A LOCKING HAND QUADRANT OR EQUAL.
2. ROD CONTINUOUS ON 2" W.G. CLASS AND ON ALL DAMPERS OVER 12" DIAMETER.
3. BLADE 22 GAGE (MIN.), BUT NOT LESS THAN TWO GAGES MORE THAN THE DUCT GAGE.
4. PROVIDE REMOTE CEILING OPERATOR WHERE DAMPER IS INACCESSIBLE.
5. FOR DUCTS OVER 12" HIGH USE MULTIPLE BLADE DAMPERS (SEE FIG. C).
6. ALTERNATE MANUFACTURERS: AMERICAN WARMING, SAFE-AIR/DOWCO, J & J, LOUVERS & DAMPERS, RUSKIN, NAILOR, ARROW UNITED, POTTORFF & CESCO.

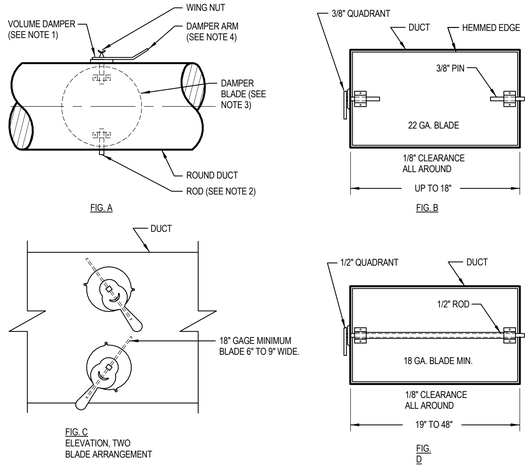

1 BALANCE DAMPER DETAIL
NTS

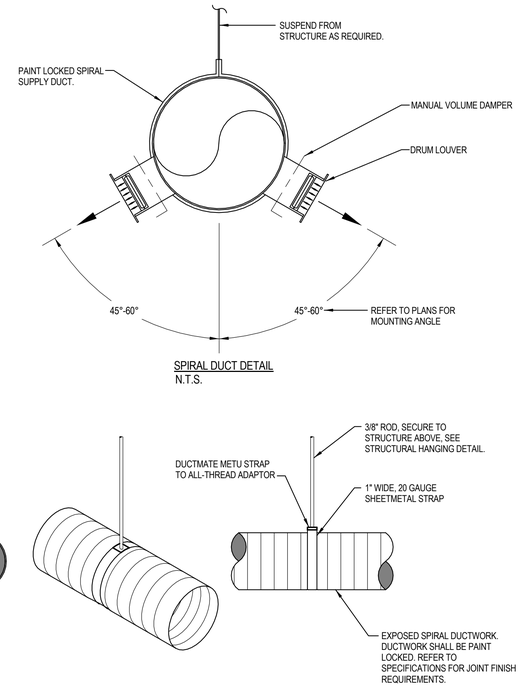

2 EXPOSED SPIRAL DUCT SUPPORT DETAIL
NTS

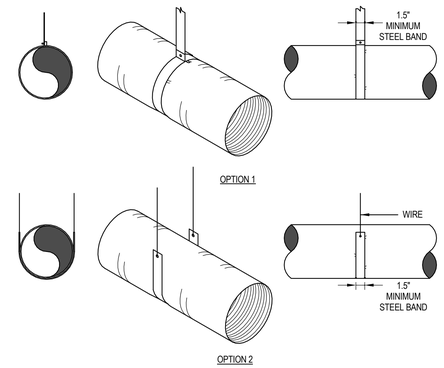

NOTES:

1. SUPPORT SYSTEM SHALL NOT DAMAGE, CRIMP, OR INHIBIT DUCT FREE AREA IN ANY WAY.
2. FLEX DUCT MUST NOT EXCEED 6'-0" FROM CONNECTION TO TERMINATION.
3. MAXIMUM LENGTH BETWEEN SUPPORTS MUST NOT EXCEED 3'-0" O.C.
4. ATTACH BANDS OR WIRES TO SUPPORT STRUCTURE ABOVE.
5. FLEXIBLE DUCTWORK SHALL BE FLEXMASTER 8-M, THERMAFLEX MK-E OR AN APPROVED EQUAL.
6. FLEXIBLE DUCTWORK SHALL BE INSULATED WITH A MINIMUM R-VALUE OF 5.
7. FLEXIBLE DUCT IS FOR INDOOR USE ONLY; DO NOT INSTALL OR STORE PRODUCT WHERE EXPOSURE TO DIRECT SUNLIGHT CAN OCCUR. PROLONGED EXPOSURE TO SUNLIGHT MAY CAUSE DETERIORATION OF VAPOR BARRIER.
8. TERMINAL DEVICES SHALL BE SUPPORTED INDEPENDENTLY OF THE FLEXIBLE DUCT.
9. REPAIR TORN OR DAMAGED VAPOR BARRIER/JACKET WITH DUCT TAPE LISTED AND LABELED TO UL 181B; IF INTERNAL CORE IS PENETRATED, REPLACE FLEXIBLE DUCT.
10. AVOID BENDING DUCT ACROSS SHARP CORNERS OR INCIDENTAL CONTACT WITH METAL FIXTURES, PIPES OR CONDUITS.
11. SHALL NOT BE INSTALLED WITHIN 4 INCHES OF HOT EQUIPMENT (FURNACES, BOILERS, STEAM PIPES, ETC.) THAT IS ABOVE 250° F.
12. SHALL NOT BE INSTALLED IN CONCRETE, BURIED BELOW GRADE OR IN CONTACT WITH THE GROUND.

3 FLEXIBLE DUCTWORK SUPPORT DETAIL
NTS

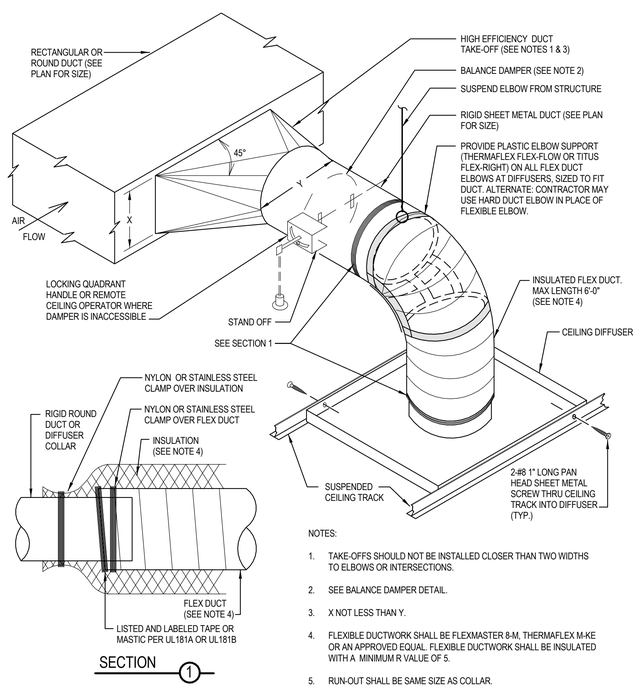

NOTES:

1. TAKE-OFFS SHOULD NOT BE INSTALLED CLOSER THAN TWO WIDTHS TO ELBOWS OR INTERSECTIONS.
2. SEE BALANCE DAMPER DETAIL.
3. X NOT LESS THAN Y.
4. FLEXIBLE DUCTWORK SHALL BE FLEXMASTER 8-M, THERMAFLEX M-KE OR AN APPROVED EQUAL. FLEXIBLE DUCTWORK SHALL BE INSULATED WITH A MINIMUM R VALUE OF 5.
5. RUN-OUT SHALL BE SAME SIZE AS COLLAR.

4 HIGH EFFICIENCY TAKE-OFF DETAIL
NTS

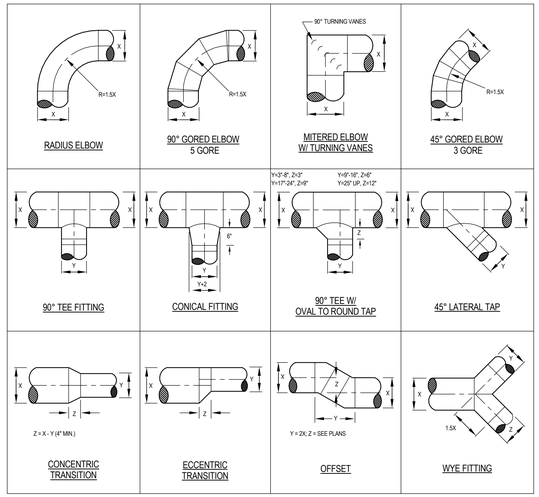

NOTE:
ALL DUCTWORK TRANSITIONS SHALL BE CONSTRUCTED AND INSTALLED TO SMACNA, SPECIFICATIONS AND THE ABOVE NOTED STANDARDS. ANY DEVIATIONS SHALL BE COORDINATED WITH THE ENGINEER.

5 ROUND DUCT FITTING DETAIL
NTS

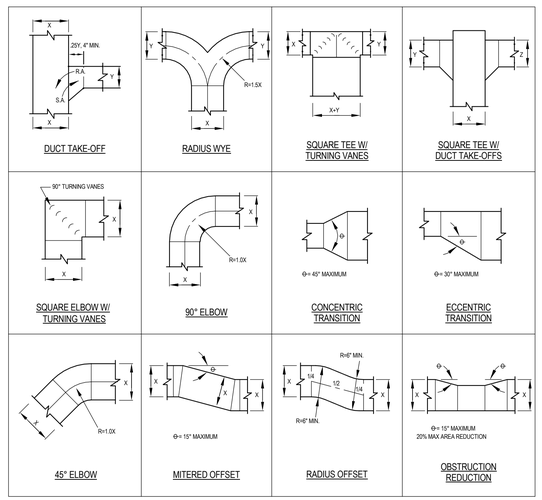

NOTE:
ALL DUCTWORK TRANSITIONS SHALL BE CONSTRUCTED AND INSTALLED TO SMACNA, SPECIFICATIONS AND THE ABOVE NOTED STANDARDS. ANY DEVIATIONS SHALL BE COORDINATED WITH THE ENGINEER.

6 RECTANGULAR DUCT FITTING DETAIL
NTS

ARCHITECT:

COLE ARCHITECTS

COLE ARCHITECTS | 802 W. BANNOCK SUIT 208
Boise, ID 83702 | (208) 345-1800

TCA architecture • planning

TCA | 6211 Roosevelt Way NE
Seattle, WA 98115 | (206) 522-3820

STAMP:

PRELIMINARY
NOT FOR CONSTRUCTION
01-29-16

CONSULTANT:

MUSGROVE ENGINEERING, P.A.
234 S. Whisperwood Way
Boise, Idaho 83709
208.384.0585
www.musgrovepa.com
OVER 30 YEARS OF EXCELLENCE

project number: 15-061

PROJECT INFORMATION:

BOISE CITY OF TREES

BOISE FIRE EST. 1910 DEDICATION

City of Boise Fire Station 4

8485 W Ustick Rd, Boise, ID 83704

REVISIONS:

MARK	DATE	DESCRIPTION

PROJECT PHASE	75% CD'S
PROJECT NUMBER	15-27
PROJECT MANAGER	J. Chatfield
PROJECT ARCHITECT	J. Chatfield
DESIGN	J. Chatfield
DRAWN BY	LR

SHEET NAME:

HVAC DETAILS

SHEET NUMBER:

M301

12.07.15

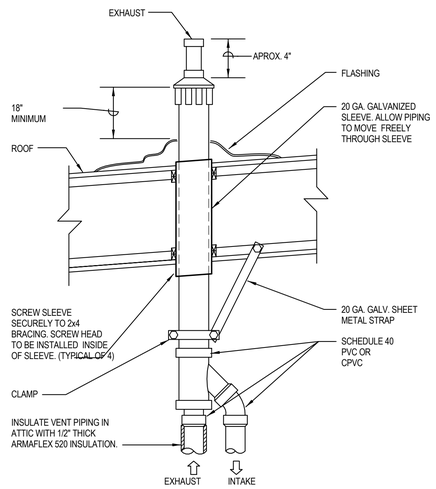

1 CONCENTRIC GAS VENT DETAIL (90%)
NTS

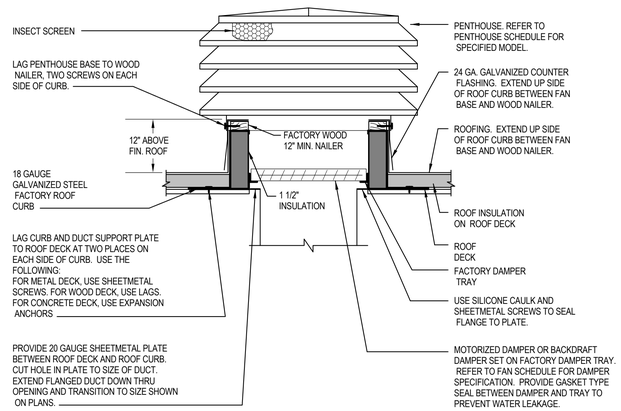

2 PENTHOUSE MOUNTING DETAIL
NTS

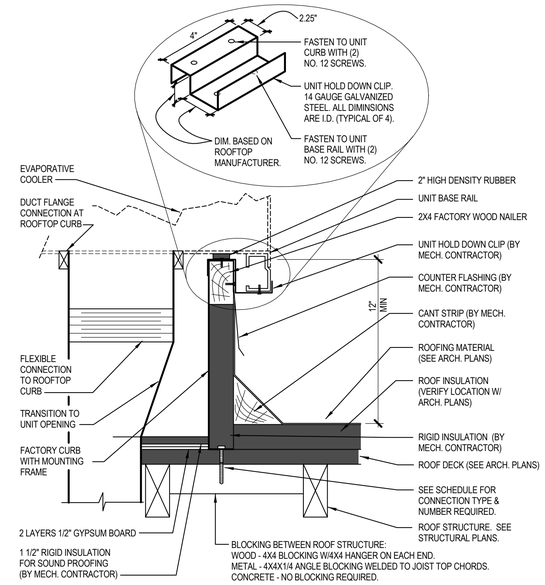

CURB TO ROOF CONNECTION SCHEDULE

NOMINAL SIZE	MAX. WEIGHTS	TOTAL LATERAL FORCE (Fp)	NO. & TYPE OF CONNECTION (EQUALLY SPACED)		
			ROOF STRUCTURE TYPE		
			METAL	WOOD	CONCRETE
≥ 6000 CFM	1800 LBS	810 LBS	(4) 1/2" LAG BOLT	(4) 1/2" LAG BOLT	(4) 3/8" EXPANSION BOLT

COMPLIES WITH THE INTERNATIONAL BUILDING CODE

3 EVAPORATIVE COOLER CURB MOUNTED DETAIL
NTS

METAL FASTENERS:

OMARK INSUL-PINS, DURO DYNE FASTENERS OR GRIP NAILS INSTALLED BY GRIP NAIL AIR HAMMER OR AUTO FASTENER EQUIP.

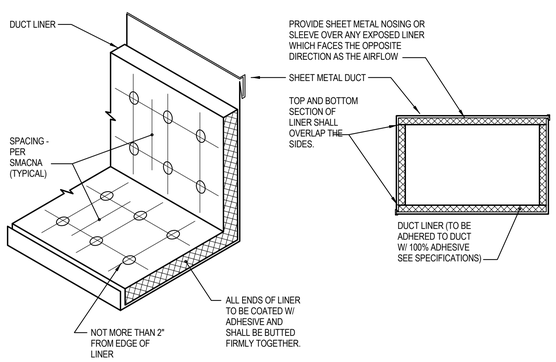

4 DUCT LINER DETAIL
NTS

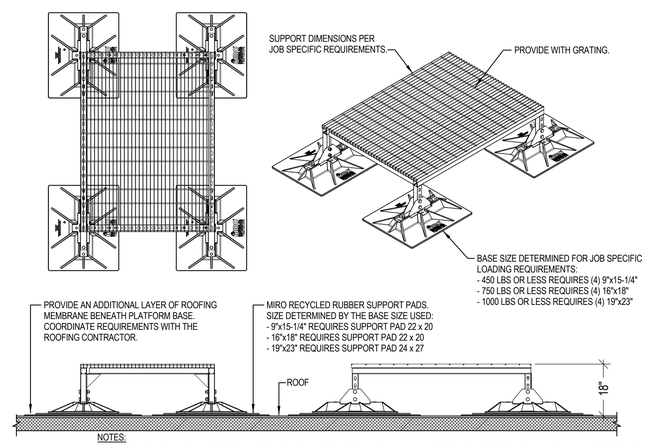

NOTES:

1. PROVIDE WITH MIRO INDUSTRIES MODEL HD, HEAVY DUTY MECHANICAL GALVANIZED ROOF SUPPORT WITH ADJUSTABLE SUPPORT LEGS.
2. SUPPORT SHALL EXTEND A MINIMUM OF 6" BEYOND EQUIPMENT IN EACH DIRECTION.
3. BOLT EQUIPMENT TO MECHANICAL SUPPORT, A MINIMUM OF (4) LOCATIONS.
4. APPROVED ALTERNATE MANUFACTURERS: UNISTRUT AND ROOF-PRO

5 ROOFTOP CONDENSING UNIT PLATFORM DETAIL
NTS

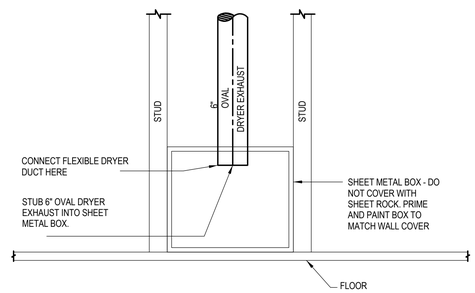

6 DRYER EXHAUST DETAIL
NTS

ARCHITECT:

COLE ARCHITECTS

COLE ARCHITECTS | 802 W. BANNOCK SUIT 208
Boise, ID 83702 | (208) 345-1800

TCA

architecture • planning

TCA | 6211 Roosevelt Way NE
Seattle, WA 98115 | (206) 522-3820

STAMP:

PRELIMINARY

NOT FOR CONSTRUCTION
01-29-16

CONSULTANT:

MUSGROVE ENGINEERING, P.A.
234 S. Whisperwood Way
Boise, Idaho 83709
208.384.0585
www.musgrovepa.com
OVER 30 YEARS OF EXCELLENCE
project number: 15-061

PROJECT INFORMATION:

BOISE CITY OF TREES

BOISE FIRE EST. 1910 DEDICATION PROFESSIONALISM

City of Boise Fire Station 4

8485 W Ustick Rd, Boise, ID 83704

REVISIONS:

MARK	DATE	DESCRIPTION

PROJECT PHASE	75% CD'S
PROJECT NUMBER	15-27
PROJECT MANAGER	J. Chatfield
PROJECT ARCHITECT	J. Chatfield
DESIGN	J. Chatfield
DRAWN BY	LR

SHEET NAME:

HVAC DETAILS

SHEET NUMBER:

M302

12.07.15

DIFFUSER SCHEDULE

SYMBOL	NOMINAL SIZE	NECK / RUNOUT SIZE	CFM RANGE	REMARKS
D-1 CFM 6"Ø	6X6	6"Ø	0 - 90	1 , 2 , 3 , 4 , 5 , 6 , 7
D-2 CFM 8"Ø	9X9	8"Ø	90 - 200	1 , 2 , 3 , 4 , 5 , 6 , 7
D-3 CFM 10"Ø	12X12	10"Ø	200 - 350	1 , 2 , 3 , 4 , 5 , 6 , 7
D-4 CFM 12"Ø	15X15	12"Ø	300 - 500	1 , 2 , 3 , 4 , 5 , 6 , 7
D-5 CFM 14"Ø	15X15	14"Ø	400 - 650	1 , 2 , 3 , 4 , 5 , 6 , 7
D-5 CFM 16"Ø	18X18	16"Ø	600 - 900	1 , 2 , 3 , 4 , 5 , 6 , 7
D-7 CFM 21X21	21X21	21X21	900 - 1400	1 , 2 , 3 , 4 , 5 , 6 , 7

REMARKS:

1. SIZES BASED ON TITUS MODEL TDC SERIES. APPROVED ALTERNATE MANUFACTURERS INCLUDE ANEMOSTAT, J&J REGISTER, NAILOR, METAL-AIRE, TUTTLE & BAILEY, KRUEGER, PRICE, AND UNITED ENERTECH.
2. SIZES BASED ON A MAXIMUM NC LEVEL OF 25.
3. ALL DIFFUSERS LOCATED IN LAY-IN CEILING AREAS SHALL BE BORDER TYPE 3 AND BE MOUNTED IN MANUFACTURER PROVIDED 24"x24" PANELS. ALL DIFFUSERS LOCATED IN HARD CEILING AREAS SHALL BE BORDER TYPE 6 (BEVELED) SURFACE MOUNTED. SEE ARCHITECTURAL PLANS FOR LOCATIONS OF VARIOUS CEILING TYPES.
4. SEE HVAC FLOOR PLANS FOR DIRECTIONAL THROW REQUIREMENTS FOR EACH DIFFUSER.
5. ALL OF THE DIFFUSERS SHOWN IN THIS SCHEDULE MAY NOT BE USED. REFERENCE THE HVAC PLAN FOR DIFFUSER CALL-OUTS AND THE QUANTITY OF EACH SIZE REQUIRED.
6. WHENEVER THERE IS A DISCREPANCY BETWEEN THE RUNOUT DUCT SIZE SHOWN ON THE PLANS AND THAT SHOWN IN THE SCHEDULE, ALWAYS USE THE LARGER OF THE TWO DUCT SIZES.
7. WHITE FINISH.

RETURN & EXHAUST GRILLE SCHEDULE

SYMBOL	NOMINAL SIZE	NECK / RUNOUT SIZE	CFM RANGE	REMARKS
R-1 6"Ø	8X8	6"Ø	0-80	1 , 2 , 3 , 4 , 5 , 6
R-2 8"Ø	10X10	8"Ø	80-180	1 , 2 , 3 , 4 , 5 , 6
R-3 10"Ø	12X12	10"Ø	180-300	1 , 2 , 3 , 4 , 5 , 6
R-4 6"Ø	22X10	6"Ø	0-80	1 , 2 , 3 , 4 , 5 , 6
R-5 8"Ø	22X10	8"Ø	80-180	1 , 2 , 3 , 4 , 5 , 6
R-6 10"Ø	22X10	10"Ø	180-300	1 , 2 , 3 , 4 , 5 , 6
R-7 12"Ø	22X22	12"Ø	300-500	1 , 2 , 3 , 4 , 5 , 6
R-8 14"Ø	22X22	14"Ø	500-750	1 , 2 , 3 , 4 , 5 , 6
R-9 22X10	22X10	22X10	500-1100	1 , 2 , 3 , 4 , 5 , 6
R-10 22X22	22X22	22X22	1100-2000	1 , 2 , 3 , 4 , 5 , 6
R-11 10X6	10X6	10X6	0-180	2 , 7 , 8
R-12 14X6	14X6	14X6	180-250	2 , 7 , 8

REMARKS:

1. SIZES BASED ON TITUS MODEL 50F, ALUMINUM EGGCRATE RETURN GRILLE, 1/2" x 1/2" x 1" SPACING (SINGLE CORE). PROVIDE SQUARE TO ROUND TRANSITION (WHERE ROUND RUN-OUT INDICATED). APPROVED ALTERNATE MANUFACTURERS INCLUDE , ANEMOSTAT, CARNES, PRICE, NAILOR, METAL-AIRE, TUTTLE & BAILEY, KRUEGER, J&J REGISTER, AND UNITED ENERTECH.
2. SIZES BASED ON A MAXIMUM NC LEVEL OF 25.
3. ALL GRILLES LOCATED IN LAY-IN CEILING AREAS SHALL HAVE BORDER #3, UNLESS OTHERWISE INDICATED. ALL GRILLES LOCATED IN HARD CEILING AREAS SHALL HAVE BORDER #1, UNLESS OTHERWISE INDICATED. REFER TO ARCHITECTURAL PLANS FOR LOCATIONS OF VARIOUS CEILING TYPES. SHEET METAL DUCTWORK VISIBLE BEHIND GRILLE SHALL BE PAINTED FLAT BLACK.
4. ALL OF THE GRILLES SHOWN IN THIS SCHEDULE MAY NOT BE USED. REFERENCE THE HVAC PLAN FOR GRILLE CALL-OUTS AND THE QUANTITY OF EACH SIZE REQUIRED.
5. WHENEVER THERE IS A DISCREPANCY BETWEEN THE RUNOUT DUCT SIZE SHOWN ON THE PLANS AND THAT SHOWN IN THE SCHEDULE, ALWAYS USE THE LARGER OF THE TWO DUCT SIZES.
6. WHITE FINISH.
7. SOFFIT GRILLE SIZES BASED ON TITUS MODEL 355FL, ALUMINUM CONSTRUCTION, 35° DEFLECTION, 1/2" SPACING, WITH ALUMINUM MESH INSECT SCREEN. APPROVED ALTERNATE MANUFACTURERS INCLUDE ANEMOSTAT, CARNES, PRICE, NAILOR, TUTTLE & BAILEY, KRUEGER, J&J REGISTER, AND UNITED ENERTECH.
8. PAINT GRILLE TO MATCH COLOR OF SOFFIT.
9. LOW WALL GRILLE SIZES BASED ON TITUS MODEL 33R, HEAVY DUTY STEEL, 14 GAUGE BLADES, 1/2" SPACING, 38° DEFLECTION, ALL-WELDED CONSTRUCTION. APPROVED ALTERNATE MANUFACTURERS INCLUDE ANEMOSTAT, CARNES, J&J REGISTER, NAILOR, TUTTLE & BAILEY, KRUEGER, PRICE, AND UNITED ENERTECH.
10. HIGH WALL GRILLE SIZES BASED ON TITUS MODEL 355 RL, STEEL BAR GRILLE, FIXED BLADES, 1/2" SPACING, 35° DEFLECTION, ADJUSTABLE OPPOSED BLADE DAMPER. APPROVED ALTERNATE MANUFACTURERS INCLUDE ANEMOSTAT, CARNES, J&J REGISTER, NAILOR, TUTTLE & BAILEY, KRUEGER, PRICE, AND UNITED ENERTECH.

VRF HVAC SYSTEM SCHEDULE

OUTDOOR UNITS

SYMBOL	AREA SERVED	NOMINAL TONS	UNIT TYPE	COOLING REQUIRED AT 80°F EDB, 67°F EWB		HEATING REQUIRED AT 70°F EAT	ELECTRICAL			MINIMUM EER	OPERATING WEIGHT (LBS)	MANUFACTURER AND MODEL	REMARKS
				TOTAL MBH	SENSIBLE MBH	TOTAL MBH	MCA	MOCP	V/Ø				
HP-1	BUILDING CORE	18.0	HEAT RECOVERY	203.0	201.9	228.4	43	50	208/3	12.4	703	DAIKIN MODEL REYQ216TTJU	1 , 2 , 4 , 6
							38	45	208/3		703		

INDOOR FAN COIL UNITS

HEAT PUMP SYMBOL	BRANCH SELECT. SYMBOL	FAN COIL SYMBOL	AREA SERVED	NOMINAL TONS	UNIT TYPE	SUPPLY FAN	COOLING	HEATING	ELECTRICAL			OSA	SOUND (dBA)	OPERATING WEIGHT (LBS)	MANUFACTURER AND MODEL	REMARKS
						CFM	MBH	MBH	MCA	MOCP	V/Ø					
HP-1	BSB-2	FC-1	CAPT. OFFICE 133	0.6	HIGH WALL	260	6.3	8.7	0.3	15.0	208/1	25	35	26	DAIKIN MODEL FXAQ07PVJU	1 , 3 , 5 , 6
		FC-2	FF WORK AREA 132	1.5	HIGH WALL	500	15.2	21.0	0.4	15.0	208/1	100	43	31	DAIKIN MODEL FXAQ18PVJU	1 , 3 , 5 , 6
		FC-3	LOBBY/AID 100	0.75	HIGH WALL	280	8.0	11.1	0.3	15.0	208/1	50	37	26	DAIKIN MODEL FXAQ09PVJU	1 , 3 , 5 , 6
		FC-4	B.C. OFFICE 102	0.6	HIGH WALL	260	6.3	8.7	0.3	15.0	208/1	50	35	26	DAIKIN MODEL FXAQ07PVJU	1 , 3 , 5 , 6
		FC-5	B.C. DORM 103	0.6	HIGH WALL	260	6.3	8.7	0.3	15.0	208/1	25	35	26	DAIKIN MODEL FXAQ07PVJU	1 , 3 , 5 , 6
		FC-6	CAPT. DORM 105	0.6	HIGH WALL	260	6.3	8.7	0.3	15.0	208/1	25	35	26	DAIKIN MODEL FXAQ07PVJU	1 , 3 , 5 , 6
		FC-7	CAPT. DORM 107	0.6	HIGH WALL	260	6.3	8.7	0.3	15.0	208/1	25	35	26	DAIKIN MODEL FXAQ07PVJU	1 , 3 , 5 , 6
		FC-17	HALL 101 (NORTH)	0.6	DUCTED	280	6.3	8.7	0.9	15.0	208/1	100	33	49	DAIKIN MODEL FXDQ07MJVU	1 , 3 , 5 , 6
	BSB-3	FC-8	DORM 110	0.6	HIGH WALL	260	6.3	8.7	0.3	15.0	208/1	25	35	26	DAIKIN MODEL FXAQ07PVJU	1 , 3 , 5 , 6
		FC-9	DORM 111	0.6	HIGH WALL	260	6.3	8.7	0.3	15.0	208/1	25	35	26	DAIKIN MODEL FXAQ07PVJU	1 , 3 , 5 , 6
		FC-10	DORM 112	0.6	HIGH WALL	260	6.3	8.7	0.3	15.0	208/1	25	35	26	DAIKIN MODEL FXAQ07PVJU	1 , 3 , 5 , 6
		FC-11	DORM 113	0.6	HIGH WALL	260	6.3	8.7	0.3	15.0	208/1	25	35	26	DAIKIN MODEL FXAQ07PVJU	1 , 3 , 5 , 6
		FC-12	STORAGE 114	0.6	HIGH WALL	260	6.3	8.7	0.3	15.0	208/1	25	35	26	DAIKIN MODEL FXAQ07PVJU	1 , 3 , 5 , 6
		FC-13	DORM 115	0.6	HIGH WALL	260	6.3	8.7	0.3	15.0	208/1	25	35	26	DAIKIN MODEL FXAQ07PVJU	1 , 3 , 5 , 6
		FC-14	DORM 116	0.6	HIGH WALL	260	6.3	8.7	0.3	15.0	208/1	25	35	26	DAIKIN MODEL FXAQ07PVJU	1 , 3 , 5 , 6
		FC-15	DORM 117	0.6	HIGH WALL	260	6.3	8.7	0.3	15.0	208/1	25	35	26	DAIKIN MODEL FXAQ07PVJU	1 , 3 , 5 , 6
		FC-16	HALL 101 (SOUTH)	1.5	DUCTED	440	15.2	21.0	1.3	15.0	208/1	100	35	68	DAIKIN MODEL FXDQ18MVJU	1 , 3 , 5 , 6
	BSB-1	FC-19	FITNESS 208	2.5	DUCTED	1094	25.4	35.2	2.8	15.0	208/1	250	43	101	DAIKIN MODEL FXMQ30PAVJU	1 , 3 , 5 , 6
		FC-20	TRAINING 207	2.5	DUCTED	1094	25.4	35.2	2.8	15.0	208/1	250	43	101	DAIKIN MODEL FXMQ30PAVJU	1 , 3 , 5 , 6
		FC-21	KITCHEN/RECREATION	4.0	DUCTED	1377	40.6	56.0	3.4	15.0	208/1	350	44	101	DAIKIN MODEL FXMQ48PAVJU	1 , 3 , 5 , 6

REMARKS:

1. APPROVED ALTERNATE MANUFACTURERS: MITSUBISHI, PANASONIC, LG, CARRIER, OR APPROVED EQUAL.
2. PROVIDE MANUFACTURER'S CRANKCASE HEATER, REFRIGERATION LINE SET AND TEES, AND TAMPER PROOF PORT CAPS.
3. CONTROL UNIT WITH MANUFACTURER'S HARD-WIRED WALL MOUNTED THERMOSTAT WITH AUTO CHANGEOVER.
4. PROVIDE WITH MIRO INDUSTRIES HEAVY DUTY MECHANICAL GALVANIZED ROOF SUPPORT WITH ADJUSTABLE SUPPORT LEGS. SUPPORT SHALL EXTEND A MINIMUM OF 2" BEYOND EQUIPMENT IN EACH DIRECTION. BOLT EQUIPMENT TO MECHANICAL SUPPORT. PROVIDE HEAT TAPE ON PLATFORM TO NEAREST DRAIN.
5. PROVIDE WITH LITTLE GIANT MINI CONDENSATE PUMP. FOR HIGH WALL APPLICATIONS, CONCEAL PUMP BEHIND UNIT WITHIN MOUNTING BRACKET ASSEMBLY.
6. ELECTRICAL TO PROVIDE DISCONNECT.

DUCTLESS SPLIT SYSTEM AIR CONDITIONING UNIT SCHEDULE

SYMBOL	AREA SERVED	NOMINAL TONS	UNIT TYPE	SUPPLY FAN			COOLING REQUIRED AT 95°F OSA, 80°F EDB, 62°F EWB		ELECTRICAL OUTDOOR UNIT			MINIMUM SEER	INDOOR/ OUTDOOR OPERATING WEIGHT (LBS)	MANUFACTURER AND MODEL	REMARKS
				CFM	HP	V/Ø	TOTAL MBH	SENSIBLE MBH	MCA	MOCP	V/Ø				
FC-18, CU-18	IT/SERVER	1.0	HIGH WALL COOLING/HEAT PUMP UNIT	434	--	THROUGH OUTDOOR UNIT	10.9	9.5	12.2	15	208/1	19.0	18/60	DAIKIN FAN COIL MODEL FTX12NMVJU CONDENSING UNIT MODEL RX12NMVJU	1 , 2 , 3 , 4 , 5 , 6

REMARKS:

1. APPROVED ALTERNATE MANUFACTURERS: MITSUBISHI, PANASONIC, LG, CARRIER, OR APPROVED EQUAL BY ENGINEER.
2. PROVIDE MANUFATURERS CRANKCASE HEATER , LOW AMBIENT CONTROLS & (TO 0°F) WIND BAFFLES, REFRIGERATION LINE SET AND TAMPER PROOF PORT CAPS.
3. CONTROL UNIT WITH WIRELESS REMOTE.
4. PROVIDE WITH MIRO INDUSTRIES HEAVY DUTY MECHANICAL GALVANIZED ROOF SUPPORT WITH ADJUSTABLE SUPPORT LEGS. SUPPORT SHALL EXTEND A MINIMUM OF 2" BEYOND EQUIPMENT IN EACH DIRECTION. BOLT EQUIPMENT TO MECHANICAL SUPPORT.
5. PROVIDE WITH CONDENSATE PUMP. CONCEAL BEHIND UNIT.
6. ELECTRICAL TO PROVIDE DISCONNECT.

ARCHITECT:

COLE ARCHITECTS

COLE ARCHITECTS | 802 W. BANNOCK SUIT 208
Boise, ID 83702 | (208) 345-1800

TCA architecture • planning

TCA | 6211 Roosevelt Way NE
Seattle, WA 98115 | (206) 522-3820

STAMP:

PRELIMINARY

NOT FOR CONSTRUCTION
01-29-16

CONSULTANT:

MUSGROVE ENGINEERING, P.A.
234 S. Whisperwood Way
Boise, Idaho 83709
208.384.0585
www.musgrovepa.com
OVER 30 YEARS OF EXCELLENCE
project number: 15-061

PROJECT INFORMATION:

City of Boise Fire Station 4

8485 W Ustick Rd, Boise, ID 83704

REVISIONS:

MARK	DATE	DESCRIPTION

PROJECT PHASE	75% CD'S
PROJECT NUMBER	15-27
PROJECT MANAGER	J. Chatfield
PROJECT ARCHITECT	J. Chatfield
DESIGN	J. Chatfield
DRAWN BY	LR

SHEET NAME:

HVAC SCHEDULES

SHEET NUMBER:

M401

12.07.15

SUPPLY GRILLE SCHEDULE

SYMBOL	NOMINAL SIZE	NECK / RUNOUT SIZE	CFM RANGE	REMARKS
G-1 CFM SIZE	16X6	16X6	200 - 350	1 , 2 , 3 , 4
G-2 CFM SIZE	10X6	10X6	0 - 250	2 , 3 , 4 , 5
G-3 CFM SIZE	16X6	16X6	200 - 400	2 , 3 , 4 , 5

REMARKS:

1. CURVE SPIRAL DUCT MOUNTED GRILLE, SIZES BASED ON TITUS MODEL S300FL. DOUBLE DEFLECTION, 3/4" BLADE SPACING, INDIVIDUALLY ADJUSTABLE BLADES, AIR EXTRACTOR, WHITE FINISH AND GRILLE SHALL MATCH CURVE OF DUCTWORK. APPROVED ALTERNATE MANUFACTURERS INCLUDE ANEMOSTAT, CARNES, J&J REGISTER, TUTTLE & BAILEY, NAILOR, METAL-AIRE, KRUEGER, PRICE, AND UNITED ENERTECH.
2. SIZES BASED ON A MAXIMUM NC LEVEL OF 25.
3. ALL OF THE GRILLES SHOWN IN THIS SCHEDULE MAY NOT BE USED. REFERENCE THE HVAC PLAN FOR GRILLE CALL-OUTS AND THE QUANTITY OF EACH SIZE REQUIRED.
4. WHENEVER THERE IS A DISCREPANCY BETWEEN THE RUNOUT DUCT SIZE SHOWN ON THE PLANS AND THAT SHOWN IN THE SCHEDULE, ALWAYS USE THE LARGER OF THE TWO DUCT SIZES.
5. WALL GRILLE SIZES BASED ON TITUS MODEL 272F. DOUBLE DEFLECTION ADJUSTABLE BLADES, 3/4" SPACING, WHITE FINISH. APPROVED ALTERNATE MANUFACTURERS INCLUDE ANEMOSTAT, CARNES, J&J REGISTER, TUTTLE & BAILEY, NAILOR, METAL-AIRE, KRUEGER, PRICE, AND UNITED ENERTECH.

EVAPORATIVE COOLER SCHEDULE

SYMBOL	AREA SERVED	TYPE	SENSIBLE COOLING CAPACITY (MBH)	SUPPLY FAN					OPERATING CONDITIONS (°F)				PUMP			OPERATING WEIGHT (LBS)	MANUFACTURER AND MODEL	REMARKS
				CFM	ESP	HP/W	RPM (MAX)	V/Ø	INDOOR DB (°F)	OUTDOOR DB (°F)	OUTDOOR WB (°F)	SUPPLY AIR DB (°F)	GPM @ 3.9' HD	W	V/Ø			
EC-1	APPARATUS BAY	DOWNFLOW	57.4	4600	.30"	750 W	1450	120/1	80	95	62	66.3	4.6	30	120/1	200	BREEZAIR MODEL EXV 275	1 , 2 , 3 , 4

REMARKS:

1. APPROVED ALTERNATE MANUFACTURERS: APPROVED EQUALS MUST RECEIVE PRIOR APPROVAL.
2. PROVIDE WITH FACTORY INSTALLED MOTOR AND PUMP, CORROSION-PROOF CABINET, AUTOMATIC DRAIN SYSTEM, BREEZAIR THERMOSTATIC WALL CONTROLLER, WITH SINGLE POINT POWER CONNECTION.
3. PROVIDE WITH HARMONY KIT - WIRED WALL CONTROLLER, 65' LOW VOLTAGE WIRING LOOM, AUTO DRAIN AND PLUMBING FITTINGS.
4. PROVIDE WITH INDUSTRIAL WALL CONTROLLER IWC10 FOR EXTERNAL EVAPORATIVE AIR CONTROL.

ELECTRIC HEATER SCHEDULE

SYMBOL	AREA SERVED	UNIT TYPE	FAN			ELECTRICAL				MANUFACTURER AND MODEL	REMARKS
			CFM	RPM	HP	KW	STEPS	V/Ø	AMPS		
EH-1	DECON 137	SURFACE CEILING MOUNTED	300	N/A	1/8	2.0	1	208/1	9.6	QMARK CDF	1 , 4
EH-2	MAINTENANCE / SHOP 138	SURFACE CEILING MOUNTED	300	N/A	1/8	2.0	1	208/1	9.6	QMARK CDF	1 , 4
EH-3	FIRE RISER 139	RECESSED WALL MOUNTED	100	N/A	N/A	1.5	1	208/1	7.2	QMARK AWH	1 , 2 , 3
EH-4	SCBA FILL STATION 140	SURFACE CEILING MOUNTED	300	N/A	1/8	2.0	1	208/1	9.6	QMARK CDF	1 , 4
EH-5	STORAGE 141	SURFACE CEILING MOUNTED	300	N/A	1/8	2.0	1	208/1	9.6	QMARK CDF	1 , 4

REMARKS:

1. APPROVED ALTERNATE MANUFACTURERS: BRASCH, QMARK, INDEECO, AND CHROMALOX.
2. MOUNT BOTTOM OF HEATER 12" ABOVE FINISH FLOOR.
3. PROVIDE UNIT WITH AN INTEGRAL THERMOSTAT. THERMOSTAT SHALL BE COVERED WITH A TAMPER-PROOF ACCESS COVER.
4. PROVIDE UNIT WITH A REMOTE WALL MOUNTED LINE-VOLTAGE THERMOSTAT.

GAS-FIRED RADIANT TUBE HEATER SCHEDULE

SYMBOL	AREA SERVED	TYPE	TUBE LENGTH (FT)	MOUNTING HEIGHT (FT)	CLEARANCE TO COMBUSTIBLES			ELECTRICAL		NATURAL GAS	OPERATING WEIGHT (LBS)	MANUFACTURER AND MODEL	REMARKS
					TOP (in)	BELOW (in)	SIDE (in)	AMPS	V/Ø	INPUT MBH			
RH-1	APPARATUS BAY	TUBE	50	---	9	76	24	5.5	120/1	100.0	180	MODINE TLP100H34	1 , 2 , 3
RH-2	APPARATUS BAY	TUBE	50	---	9	76	24	5.5	120/1	100.0	180	MODINE TLP100H34	1 , 2 , 3
RH-3	APPARATUS BAY	TUBE	50	---	9	76	24	5.5	120/1	100.0	180	MODINE TLP100H34	1 , 2 , 3

REMARKS:

1. APPROVED ALTERNATE MANUFACTURERS: CO-RAY-VAC, SPACE-RAY, CALCANA, RE-VERBER-RAY, AND MODINE.
2. PROVIDE WALL MOUNTED HEATING THERMOSTAT.
3. PROVIDE OPTIONAL ELECTRONIC CONTROL PANEL.

PENTHOUSE SCHEDULE

SYMBOL	AREA SERVED	TYPE	NUMBER OF TIERS	THROAT SIZE	MINIMUM FREE AREA (ft^2)	FINISH	MANUFACTURER AND MODEL	REMARKS
PH-1	APPARATUS 135	GRAVITY RELIEF VENTILATOR	7	36X72	18.0	MILL	COOK MODEL TRE	1 , 2

REMARKS:

1. APPROVED ALTERNATE MANUFACTURERS: GREENHECK, CARNES, AIROLITE, LOUVERS & DAMPERS, AIR-RITE MANUFACTURING, RUSKIN, NCA, AND CESCO.
2. PROVIDE WITH BIRD SCREEN, BACKDRAFT DAMPER, 120V// LOW LEAKAGE MOTORIZED DAMPER, AND ROOF CURB.

ARCHITECT:

COLE ARCHITECTS

COLE ARCHITECTS | 802 W. BANNOCK SUIT 208
Boise, ID 83702 | (208) 345-1800

TCA architecture • planning

TCA | 6211 Roosevelt Way NE
Seattle, WA 98115 | (206) 522-3820

STAMP:

PRELIMINARY
NOT FOR CONSTRUCTION
01-29-16

CONSULTANT:

MUSGROVE ENGINEERING, P.A.
234 S. Whisperwood Way
Boise, Idaho 83709
208.384.0585
www.musgrovepa.com
OVER 30 YEARS OF EXCELLENCE

project number: 15-061

PROJECT INFORMATION:

BOISE CITY OF TREES

BOISE FIRE Est. 1891 DEDICATION

City of Boise Fire Station 4

8485 W Ustick Rd, Boise, ID 83704

REVISIONS:

MARK	DATE	DESCRIPTION

PROJECT PHASE	75% CD'S
PROJECT NUMBER	15-27
PROJECT MANAGER	J. Chatfield
PROJECT ARCHITECT	J. Chatfield
DESIGN	J. Chatfield
DRAWN BY	LR

SHEET NAME:

HVAC SCHEDULES

SHEET NUMBER:

M402

12.07.15

ELECTRIC DUCT HEATER SCHEDULE

SYMBOL	AREA SERVED	UNIT TYPE	DUCT SIZE		CFM RANGE			MINIMUM AIRFLOW (CFM)	MAXIMUM AIRFLOW (CFM)	MANUFACTURER AND MODEL	REMARKS
			WIDTH	HEIGHT	KW	V/Ø	STEPS				
DH-1	TURN OUT RM 136	FLANGED OPEN COIL	16"	14"	20	208/3	SCR	825	825	QMARK MODEL FC SERIES	1 , 2 , 3

REMARKS:

1. APPROVED ALTERNATE MANUFACTURERS: MARKEL, REDD-I, VALLEY INDUSTRIES, INDEECO, AND BRASCH.
2. PROVIDE WITH MAGNETIC DE-ENERGIZING CONTACTORS, AUTOMATIC LIMIT THERMOSTAT, CIRCUIT FUSING (IF ABOVE 40 AMPS), FUSED DISCONNECT, AIR PRESSURE SENSOR SWITCH, CONTROL TRANSFORMER, AND INSULATED CONTROL BOX.
3. CONTROL WITH DDC SYSTEM WITH TIMER.

EXHAUST FAN SCHEDULE

SYMBOL	AREA SERVED	UNIT TYPE	BLOWER				ELECTRICAL		MAXIMUM SONES	OPERATING WEIGHT (LBS)	MANUFACTURER AND MODEL	REMARKS
			CFM	ESP	MAXIMUM RPM	DRIVE	HP/W	V/Ø				
EF-1	DECON 137	CEILING CABINET	100	.25"	1075	DIRECT	33 W	120/1	2.5	15	COOK MODEL GC-148	1 , 2 , 3
EF-2	ELEC RM 126	CEILING CABINET	100	.25"	1075	DIRECT	33 W	120/1	2.5	15	COOK MODEL GC-148	1 , 2 , 4
EF-3	VEHICLE EXHAUST	RADIAL BLADE, HIGH PRESSURE	560	4.0"	3450	DIRECT	1 HP	120/1	--	50	GRAINGER PACKAGE NO. 7C447 (DAYTON)	5
EF-4	VEHICLE EXHAUST	RADIAL BLADE, HIGH PRESSURE	560	4.0"	3450	DIRECT	1 HP	120/1	--	50	GRAINGER PACKAGE NO. 7C447 (DAYTON)	5
EF-5	VEHICLE EXHAUST	RADIAL BLADE, HIGH PRESSURE	560	4.0"	3450	DIRECT	1 HP	120/1	--	50	GRAINGER PACKAGE NO. 7C447 (DAYTON)	5

REMARKS:

1. APPROVED ALTERNATE MANUFACTURERS: GREENHECK, TWIN CITY FAN COMPANY, AND SOLER & PALAU.
2. PROVIDE UNIT WITH MANUFACTURER'S ALUMINUM ROOF CAP (FLAT ROOF) EQUAL TO COOK MODEL PR (W/ INTEGRAL BIRD SCREEN AND ROOF CURB), BACKDRAFT DAMPER, OUTLET FLEX DUCT CONNECTION, STANDARD PLUG DISCONNECT, PRE-WIRED FAN SPEED CONTROLLER, THERMAL OVERLOAD PROTECTION, HANGING VIBRATION ISOLATORS, AND WHITE ALUMINUM GRILLE.
3. CONTROL FAN WITH SEPARATE WALL SWITCH.
4. CONTROL FAN WITH HEAT RISE THERMOSTAT.
5. CONTROL FAN WITH VEHICLE EXHAUST CONTROL PANEL.

LARGE DIAMETER CEILING FAN SCHEDULE

SYMBOL	AREA SERVED	BLOWER			ELECTRICAL		OPERATING WEIGHT (LBS)	MANUFACTURER AND MODEL	REMARKS
		FAN DIAMETER	CFM	MAX RPM	HP/W	V/Ø			
CF-1	APPARATUS 135	12'	N/A	111	1 HP	208/3	150	BIG ASS FAN COMPANY MODEL POWERFOIL 8	1 , 2

REMARKS:

1. APPROVED ALTERNATE MANUFACTURERS: MACROAIR.
2. PROVIDE WITH ELECTRONIC WALL CONTROLLER, SAFETY CABLE, AND EXTENSION TUBE (AS REQUIRED TO MOUNT FAN 6' BELOW CEILING). MOUNT CONTROLLER 60" AFF. MECHANICAL TO PROVIDE AND INSTALL ALL LOW VOLTAGE WIRING BETWEEN FAN AND CONTROLLER.

ENERGY RECOVERY UNIT SCHEDULE

SYMBOL	SUPPLY FAN			EXHAUST FAN			WINTER DESIGN						SUMMER DESIGN						ELECTRICAL			MIN EFF	WEIGHT (LBS)	MANUFACTURER AND MODEL	REMARKS
							SUPPLY			EXHAUST			SUPPLY			EXHAUST									
	CFM	ESP	HP	CFM	ESP	HP	EDB	EWB	LDB	EDB	EWB	LDB	EDB	EWB	LDB	EDB	EWB	LDB	MCA	MOCP	V/Ø				
ERU-1	1550	1.0"	1.0	1350	1.0"	1.0	9	6	--	68	--	--	94	63	--	80	--	--	14.0	20	208/3	--	600	COOK MODEL ERV 1500	1 , 2 , 3 , 4
ERU-2	825	1.0"	.5	825	1.0"	.5	9	6	--	68	--	--	94	63	--	80	--	--	8.2	15	208/3	--	600	COOK MODEL ERV 1500	1 , 2 , 3 , 4

REMARKS:

1. APPROVED ALTERNATE MANUFACTURERS: AAON, GREENHECK (MODEL ERV), XETEX, PENNBARRY, CARNES, AND NUTECH LIFEBREATH.
2. PROVIDE WITH EXHAUST ONLY FROST PREVENTION CONTROLS, SINGLE POINT POWER CONNECTION, NEMA 3R DISCONNECT SWITCH, MOTOR STARTERS, 2" - 30% FILTERS IN EACH AIR STREAM, 7 YEAR WARRANTY ON HEAT EXCHANGER, VIBRATION ISOLATORS ON EACH FAN, INTAKE AND EXHAUST WEATHER HOODS, MANUFACTURER'S ROOF CURB, HINGED ACCESS PANELS, AND ECONOMIZER CYCLE. PROVIDE UNIT WITH UL APPROVAL LISTING.
3. CONTROL WITH DDC..
4. CONNECT UNIT TO DDC CONTROL SYSTEM AND SEQUENCE AS OUTLINED ON CONTROL DRAWINGS.

KITCHEN EXHAUST HOOD SCHEDULE

SYMBOL	AREA SERVED	UNIT TYPE	HOOD DIMENSIONS		EXHAUST AIR			MAKE-UP AIR			HOOD HANGING WEIGHT (LBS)	MANUFACTURER AND MODEL	REMARKS
			LENGTH	WIDTH	AIRFLOW CFM	DUCT CONNECTION	MAX S.P. LOSS	AIRFLOW CFM	DUCT CONNECTION	MAX S.P. LOSS			
RH-1	KITCHEN/DINING 202	RESIDENTIAL RANGE HOOD	2' - 6"	20-1/6"	150 / 630	3-1/4" X 14"	-0.10"	N/A	N/A	N/A	N/A	BROAN MODEL QP430SS	1 , 2 , 3

REMARKS:

1. APPROVED ALTERNATE MANUFACTURERS: GE, JENNAIR, AND KENMORE.
2. ELECTRICAL SPECIFICATIONS - 120V/1 PHASE, 3.5 AMPS. PROVIDE WITH DISHWASHER SAFE ALUMINUM FILTERS, (4) 50W, HALOGEN FLOOD LIGHTS, 3-1/4" X 14" HORIZONTAL DISCHARGE EXHAUST VENTING OPTION, AND DAMPER. UNIT SHALL BE BRUSHED STAINLESS STEEL.
3. PROVIDED BY OTHERS, INSTALLED BY CONTRACTOR.

ARCHITECT:

COLE ARCHITECTS

COLE ARCHITECTS | 802 W. BANNOCK SUIT 208
Boise, ID 83702 | (208) 345-1800

TCA
architecture • planning

TCA | 6211 Roosevelt Way NE
Seattle, WA 98115 | (206) 522-3820

STAMP:

PRELIMINARY
NOT FOR CONSTRUCTION
01-29-16

CONSULTANT:

MUSGROVE ENGINEERING, P.A.
234 S. Whisperwood Way
Boise, Idaho 83709
208.384.0585
www.musgrovepa.com
OVER 30 YEARS OF EXCELLENCE

project number: 15-061

PROJECT INFORMATION:

BOISE CITY OF TREES

BOISE FIRE EST. 1890 DEDICATION

City of Boise Fire Station 4

8485 W Ustick Rd, Boise, ID 83704

REVISIONS:

MARK	DATE	DESCRIPTION

PROJECT PHASE	75% CD'S
PROJECT NUMBER	15-27
PROJECT MANAGER	J. Chatfield
PROJECT ARCHITECT	J. Chatfield
DESIGN	J. Chatfield
DRAWN BY	LR

SHEET NAME:

HVAC SCHEDULES

SHEET NUMBER:

M403

12.07.15

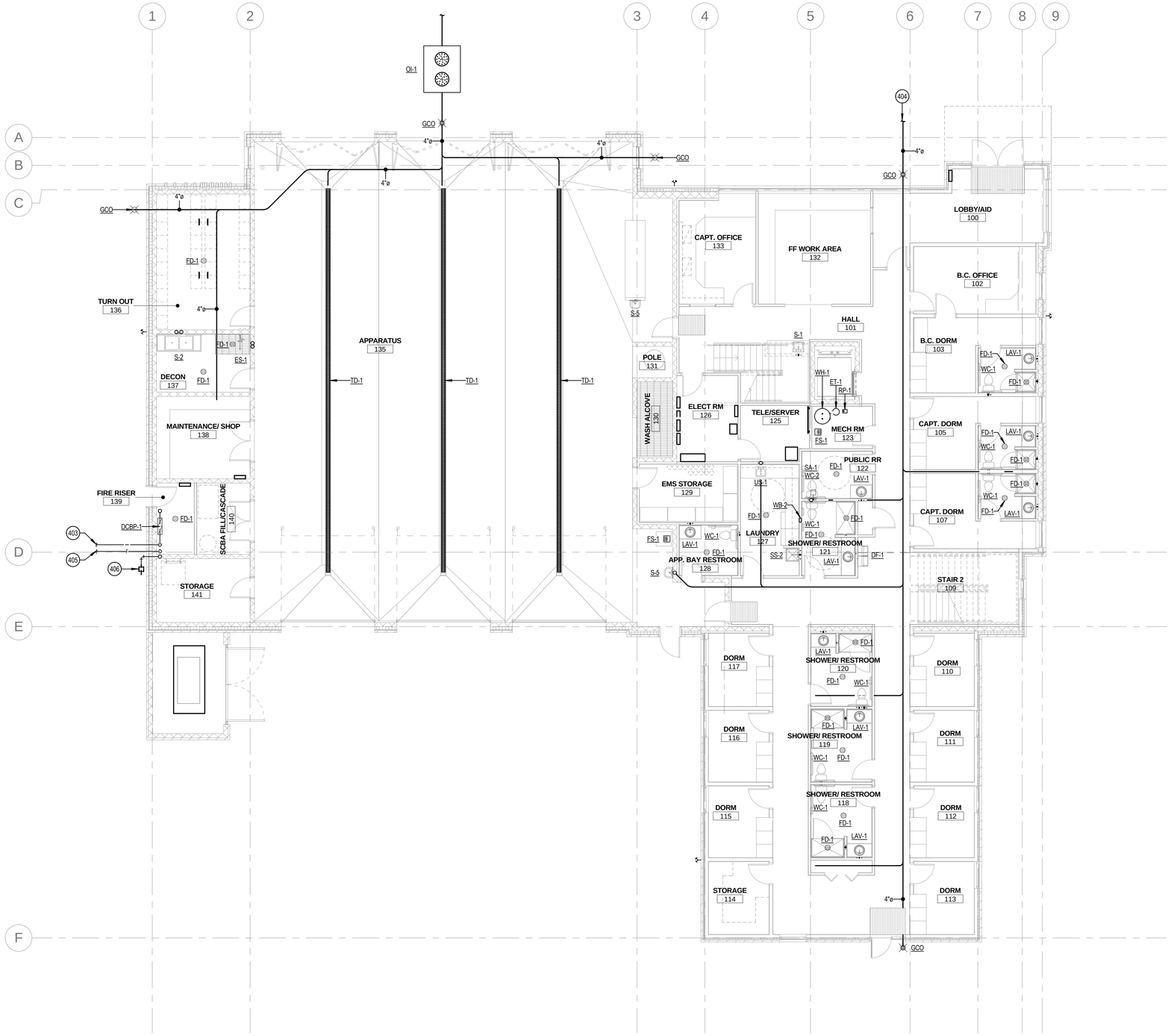

KEYED NOTES

403	2" CW SERVICE TO BUILDING WITH NEW 1-1/2" WATER METER. REFER TO CIVIL PLANS FOR CONTINUATION.
404	4" SANITARY SEWER. INVERT ELEVATION AT XX" BELOW FINISHED FLOOR @ 1/4" SLOPE. REFER TO CIVIL PLANS FOR CONTINUATION.
405	FIRE SERVICE TO BUILDING. REFER TO CIVIL PLANS FOR CONTINUATION.
406	GAS METER WITH X", 2 PSI GAS LINE SERVING BUILDING. COORDINATE EXACT LOCATION AND REQUIREMENTS WITH INTERMOUNTAIN GAS COMPANY. TOTAL GAS LOAD = XXX MBH @ 2 PSI. REFER TO GAS SIZING CHART ON SHEET PX.X FOR BREAKDOWN OF EQUIPMENT.

FOUNDATION PLUMBING PLAN
1/8" = 1'-0"

NORTH

ARCHITECT:

COLE ARCHITECTS

COLE ARCHITECTS | 802 W. BANNOCK SUIT 208
Boise, ID 83702 | (208) 345-1800

TCA architecture • planning

TCA | 6211 Roosevelt Way NE
Seattle, WA 98115 | (206) 522-3820

STAMP:

PRELIMINARY
NOT FOR CONSTRUCTION
01-29-16

CONSULTANT:

MUSGROVE ENGINEERING, P.A.
234 S. Whisperwood Way
Boise, Idaho 83709
208.384.0585
www.musgrovepa.com
OVER 30 YEARS OF EXCELLENCE
project number: 15-061

PROJECT INFORMATION:

BOISE CITY OF TREES

BOISE FIRE Est. 1878 DEDICATION PROFESSIONALISM

City of Boise Fire Station 4

8485 W Ustick Rd, Boise, ID 83704

REVISIONS:

MARK	DATE	DESCRIPTION

PROJECT PHASE	75% CD'S
PROJECT NUMBER	15-27
PROJECT MANAGER	J. Chatfield
PROJECT ARCHITECT	J. Chatfield
DESIGN	J. Chatfield
DRAWN BY	LR

SHEET NAME:

FOUNDATION PLUMBING PLAN

SHEET NUMBER:

P101

12.07.15

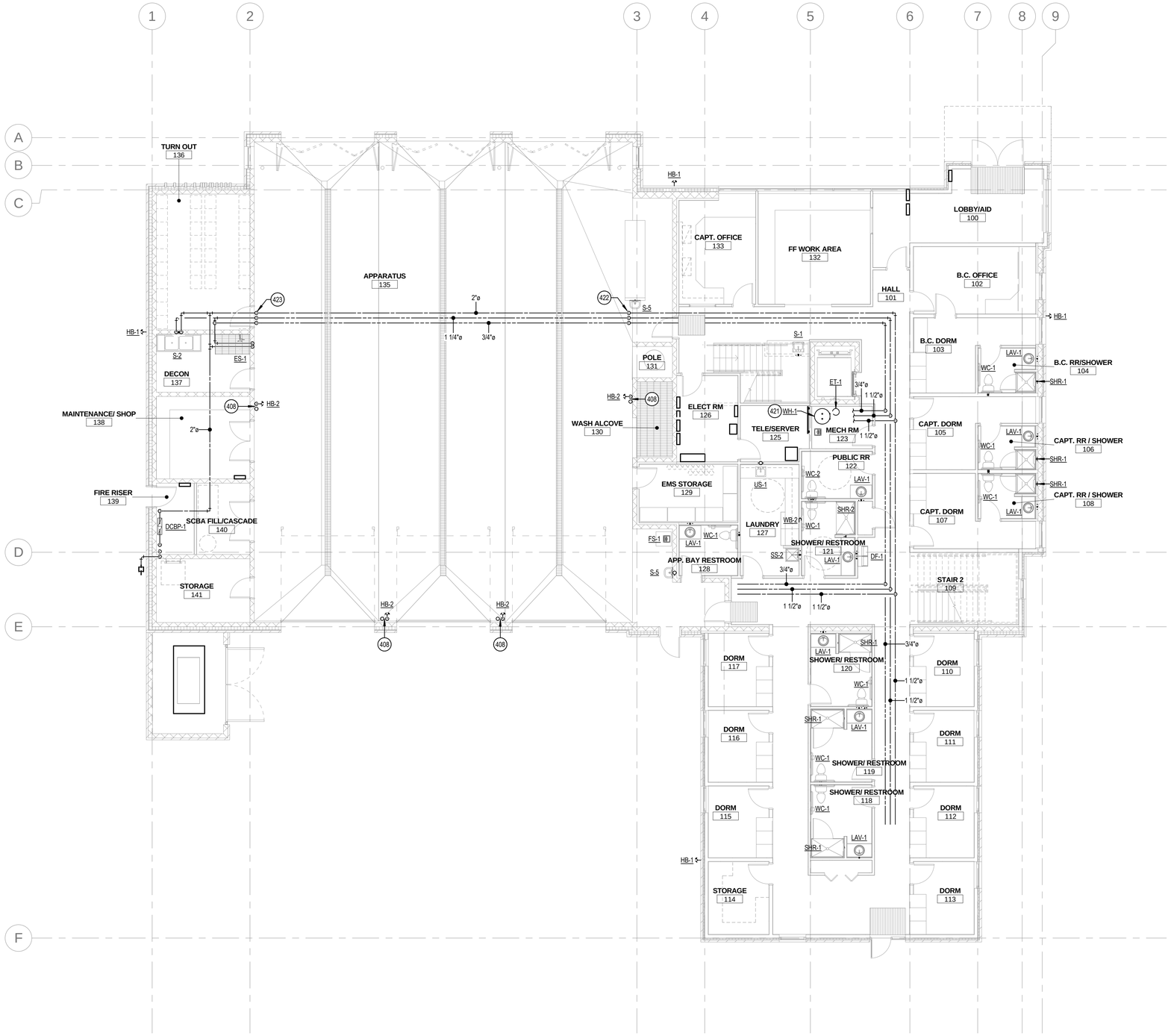

KEYED NOTES

408	DROP 3/4" NON-POTABLE CW LINE AND 1/2" COMPRESSED AIR LINE DOWN EXPOSED ON WALL.
421	REFER TO WATER HEATER PIPING DETAIL ON SHEET P302.
422	ROUTE 2" CW, 1-1/4" HW, AND 3/4" HWR UP EXPOSED ON WALL TO CEILING SPACE OF APPARATUS 135. HOLD TIGHT TO STRUCTURE.
423	ROUTE 2" CW, 1-1/4" HW, AND 3/4" HWR DOWN EXPOSED ON WALL TO CEILING SPACE OF TURNOUT 136. HOLD TIGHT TO STRUCTURE.

1ST FLOOR PLUMBING PLAN

1/8" = 1'-0"

NORTH

ARCHITECT:

COLE ARCHITECTS

COLE ARCHITECTS | 802 W. BANNOCK SUIT 208
Boise, ID 83702 | (208) 345-1800

TCA

architecture • planning

TCA | 6211 Roosevelt Way NE
Seattle, WA 98115 | (206) 522-3820

STAMP:

PRELIMINARY

NOT FOR CONSTRUCTION
01-29-16

CONSULTANT:

MUSGROVE ENGINEERING, P.A.
234 S. Whisperwood Way
Boise, Idaho 83709
208.384.0585
www.musgrovepa.com
OVER 30 YEARS OF EXCELLENCE
project number: 15-061

PROJECT INFORMATION:

BOISE CITY OF TREES

BOISE FIRE Est. 1891 DEDICATION

City of Boise Fire Station 4

8485 W Ustick Rd, Boise, ID 83704

REVISIONS:

MARK	DATE	DESCRIPTION

PROJECT PHASE	75% CD'S
PROJECT NUMBER	15-27
PROJECT MANAGER	J. Chatfield
PROJECT ARCHITECT	J. Chatfield
DESIGN	J. Chatfield
DRAWN BY	LR

SHEET NAME:

1ST FLOOR PLUMBING PLAN

SHEET NUMBER:

P201

12.07.15

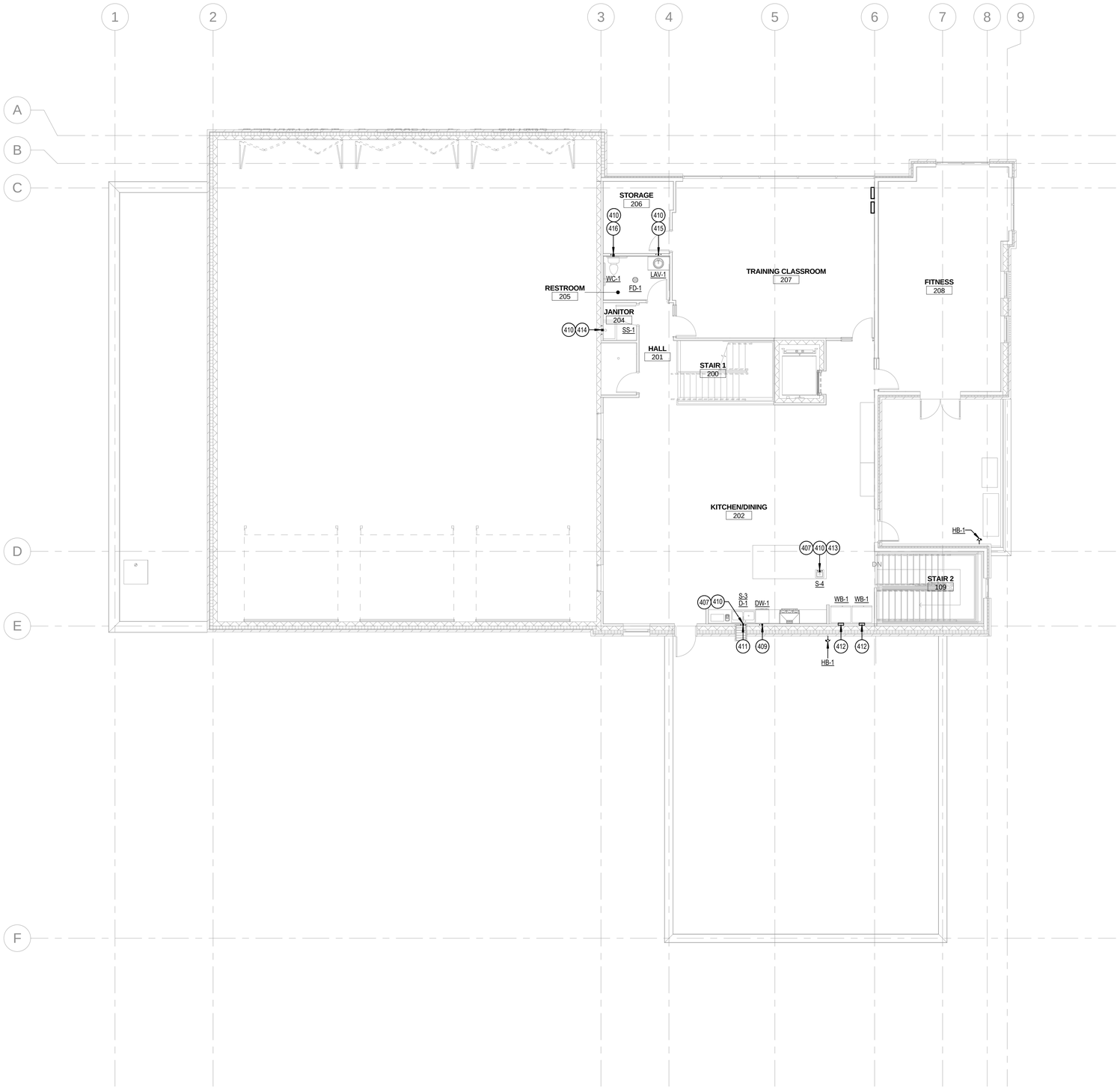

KEYED NOTES

407	REFER TO ISLAND SINK FOOT VENT DETAIL ON SHEET P302.
409	REFER TO DISHWASHER CONNECTION DETAIL ON SHEET P302.
410	ROUTE WASTE PIPING DOWN THROUGH FLOOR TO FIRST FLOOR CEILING SPACE. REFER TO 1ST FLOOR PLUMBING PLAN FOR CONTINUATION.
411	1/2" CW AND 1/2" HW UP FROM BELOW TO SERVE KITCHEN SINK S-3. PROVIDE 1/2" TEE OFF HW LINE TO SERVE DISHWASHER DW-1.
412	1/2" CW UP FROM BELOW TO SERVE WALL BOX WB-1.
413	1/2" CW AND 1/2" HW UP FROM BELOW TO SERVE PREP SINK S-4.
414	1/2" CW AND 1/2" HW UP FROM BELOW TO SERVE SERVICE SINK SS-1.
415	1/2" CW AND 1/2" HW UP FROM BELOW TO SERVE LAVATORY LAV-1.
416	1/2" CW UP FROM BELOW TO SERVE WATER CLOSET WC-1.

2ND FLOOR PLUMBING PLAN
1/8" = 1'-0"

NORTH

ARCHITECT:

COLE ARCHITECTS

COLE ARCHITECTS | 802 W. BANNOCK SUIT 208
Boise, ID 83702 | (208) 345-1800

TCA architecture • planning

TCA | 6211 Roosevelt Way NE
Seattle, WA 98115 | (206) 522-3820

STAMP:

PRELIMINARY
NOT FOR CONSTRUCTION
01-29-16

CONSULTANT:

MUSGROVE ENGINEERING, P.A.
234 S. Whisperwood Way
Boise, Idaho 83709
208.384.0585
www.musgrovepa.com
OVER 30 YEARS OF EXCELLENCE
project number: 15-061

PROJECT INFORMATION:

BOISE CITY OF TREES

BOISE FIRE EST. 1891 DEDICATION

City of Boise Fire Station 4

8485 W Ustick Rd, Boise, ID 83704

REVISIONS:

MARK	DATE	DESCRIPTION

PROJECT PHASE	75% CD'S
PROJECT NUMBER	15-27
PROJECT MANAGER	J. Chatfield
PROJECT ARCHITECT	J. Chatfield
DESIGN	J. Chatfield
DRAWN BY	LR

SHEET NAME:

2ND FLOOR PLUMBING PLAN

SHEET NUMBER:

P202

12.07.15

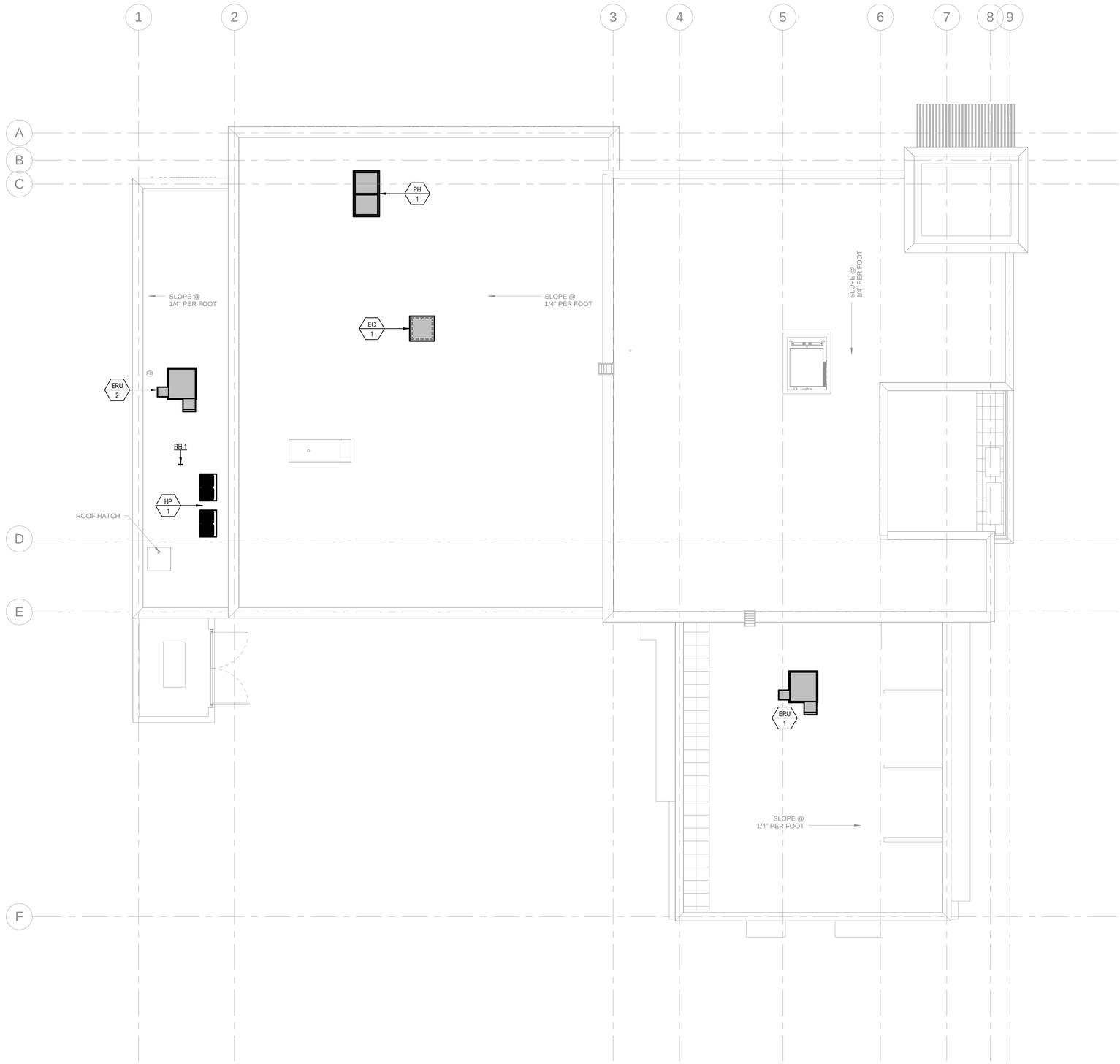

PLUMBING ROOF PLAN
1/8" = 1'-0"

NORTH

KEYED NOTES

ARCHITECT:

COLE ARCHITECTS

COLE ARCHITECTS | 802 W. BANNOCK SUIT 208
Boise, ID 83702 | (208) 345-1800

TCA architecture • planning

TCA | 6211 Roosevelt Way NE
Seattle, WA 98115 | (206) 522-3820

STAMP:

PRELIMINARY

NOT FOR CONSTRUCTION
01-29-16

CONSULTANT:

MUSGROVE
ENGINEERING, P.A.
234 S. Whisperwood Way
Boise, Idaho 83709
208.384.0585
www.musgrovepa.com
OVER 30 YEARS OF EXCELLENCE

project number: 15-061

PROJECT INFORMATION:

BOISE CITY OF TREES

BOISE FIRE EST. 1870 DEDICATION PROTECTION

City of Boise Fire Station 4

8485 W Ustick Rd, Boise, ID 83704

REVISIONS:

MARK	DATE	DESCRIPTION

PROJECT PHASE	75% CD'S
PROJECT NUMBER	15-27
PROJECT MANAGER	J. Chatfield
PROJECT ARCHITECT	J. Chatfield
DESIGN	J. Chatfield
DRAWN BY	LR

SHEET NAME:

PLUMBING ROOF PLAN

SHEET NUMBER:

P203

12.07.15

NOTE:

1. THE PLUMBING CONTRACTOR IS RESPONSIBLE FOR ALL BACKFLOW DEVICES TO BE INSPECTED BY A CERTIFIED BACKFLOW TECHNICIAN BEFORE THE USE OF THE BUILDING POTABLE WATER SYSTEM.
2. THIS BACKFLOW PREVENTER CAN BE INSTALLED IN A VERTICAL CONFIGURATION WHEN SPACE IN ROOM IS LIMITED. REFERENCE PLANS FOR CONFIGURATION OR CONTACT THE ENGINEER FOR APPROVAL.
3. THIS SYSTEM IS FOR INDOOR INSTALLATIONS ONLY. THIS VALVE SHALL BE EASILY ACCESSIBLE TO FACILITATE TESTING AND SERVICING. DO NOT INSTALL IN A CONCEALED LOCATION.

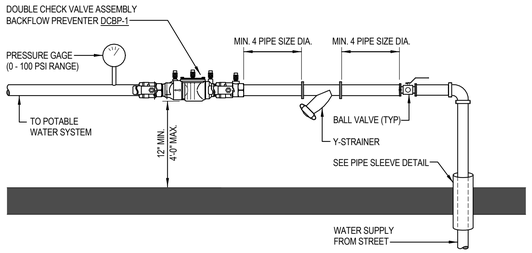

1 DCBP WATER SERVICE DETAIL
NTS

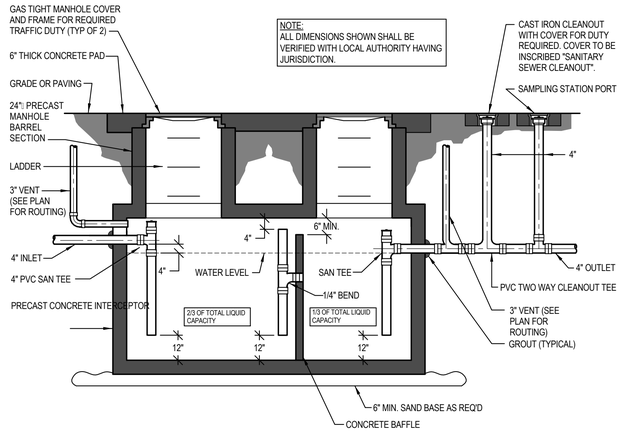

2 OIL AND SAND INTERCEPTOR DETAIL
NTS

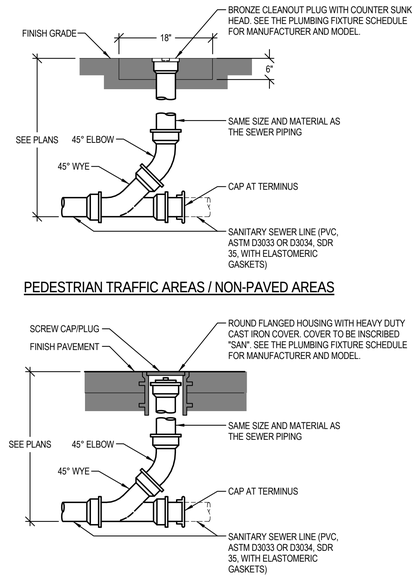

3 GRADE CLEANOUT (GCO) DETAIL
NTS

FLUSH VALVE PRIMER NOTES:

1. THE FLUSH VALVE PRIMER IS DESIGNED TO PRIME ONE FLOOR DRAIN TRAP AT A DISTANCE NOT TO EXCEED 20 FEET FROM POINT OF INSTALLATION.
2. THE FLUSH VALVE PRIMER SHALL BE INSTALLED WITH A VACUUM BREAKER.
3. FLUSH VALVE PRIMER IS INTENDED FOR USE WITH WATER CLOSETS CONSUMING 3.5 TO 1.0 GAL/FLUSH.
4. TRAP PRIMER SHALL BE PRECISION PLUMBING PRODUCTS MODEL FVP-1VB WITH VACUUM BREAKER.
   APPROVED ALTERNATES: MIFAB, SIOUX CHIEF, AND ZURN.

PRESSSURE ACTIVATED PRIMER NOTES:

1. THE PRIMING VALVE MUST BE INSTALLED ON A FRESH COLD WATER LINE OF 1/2" TO 1-1/2" DIAMETER.
2. DISTRIBUTION UNIT MUST BE INSTALLED LEVEL WITH AN ACCESS DOOR FOR PERIODIC INSPECTION.
3. DO NOT SUBJECT TRAP PRIMER VALVE TO ROUGH-IN PRESSURE TEST.
4. DISTANCE FROM DISTRIBUTION UNIT TO FLOOR MUST BE 12" FOR EVERY 20' HORIZONTALLY.
5. TRAP PRIMER SHALL BE PRECISION PLUMBING PRODUCTS MODEL CPO-500 WITH DU DISTRIBUTION UNIT IF REQUIRED.
   APPROVED ALTERNATES: MIFAB, SIOUX CHIEF, AND ZURN.

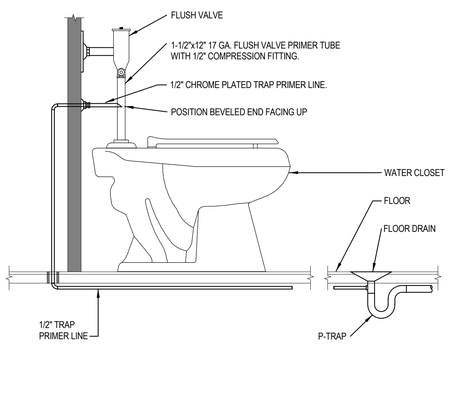

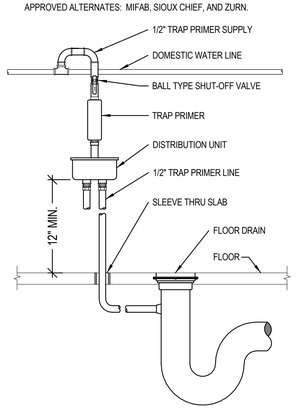

4 TRAP PRIMER CONNECTION DETAIL
NTS

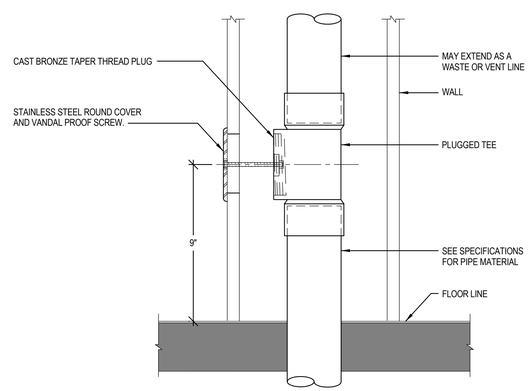

5 WALL CLEANOUT (WCO) DETAIL
NTS

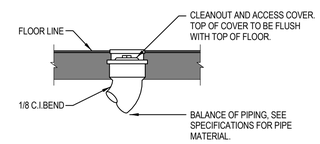

NOTE:
CLEANOUTS SHALL BE PROVIDED AT EACH HORIZONTAL DRAINAGE PIPE AT ITS UPPER TERMINAL, AND EACH RUN OF PIPING WHICH IS MORE THAN 100 FEET, AND SHALL BE PROVIDED FOR EACH 100 FEET DEVELOPED LENGTH, OR FRACTION THEREOF OF SUCH PIPING. AN ADDITIONAL CLEANOUT SHALL BE PROVIDED FOR EACH AGGREGATE HORIZONTAL CHANGE OF DIRECTION EXCEEDING ONE HUNDRED THIRTY-FIVE DEGREES, PER APPLICABLE PLUMBING CODE. THIS SHALL BE PROVIDED REGARDLESS OF WHAT IS SHOWN ON THE DRAWINGS.

6 FLOOR CLEANOUT (FCO) DETAIL
12" = 1'-0"

ARCHITECT:

COLE ARCHITECTS

COLE ARCHITECTS | 802 W. BANNOCK SUIT 208
Boise, ID 83702 | (208) 345-1800

TCA
architecture • planning

TCA | 6211 Roosevelt Way NE
Seattle, WA 98115 | (206) 522-3820

STAMP:

PRELIMINARY
NOT FOR CONSTRUCTION
01-29-16

CONSULTANT:

MUSGROVE
ENGINEERING, P.A.
234 S. Whisperwood Way
Boise, Idaho 83709
208.384.0585
www.musgrovepa.com
OVER 30 YEARS OF EXCELLENCE
project number: 15-061

PROJECT INFORMATION:

BOISE CITY OF TREES
BOISE FIRE EST. 1910 DEDICATION

City of Boise Fire Station 4

8485 W Ustick Rd, Boise, ID 83704

REVISIONS:

MARK	DATE	DESCRIPTION

PROJECT PHASE	75% CD'S
PROJECT NUMBER	15-27
PROJECT MANAGER	J. Chatfield
PROJECT ARCHITECT	J. Chatfield
DESIGN	J. Chatfield
DRAWN BY	LR

SHEET NAME:

PLUMBING DETAILS

SHEET NUMBER:

P301

12.07.15

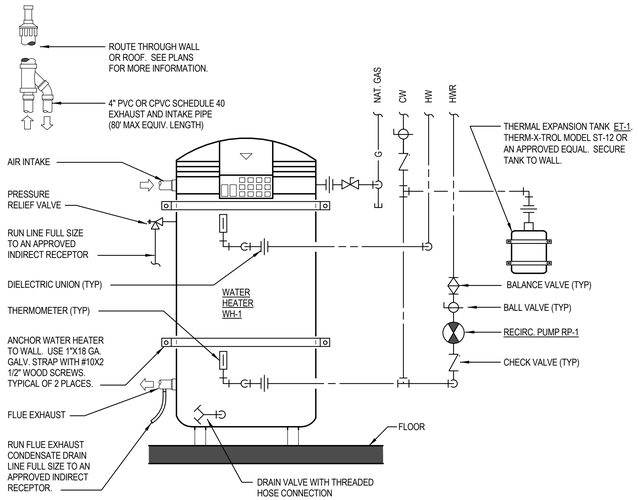

1 HIGH EFFICIENCY WATER HEATER PIPING DETAIL
NTS

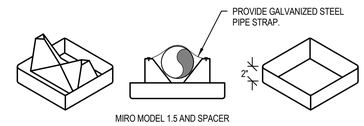

NOTE:

ALL GAS PIPING SHALL BE SUPPORTED 6" MINIMUM ABOVE ROOF STRUCTURE.

PIPE SUPPORTS SHALL BE AS FOLLOWS:

SIZE OF PIPE	SUPPORT REQUIRED
1/2"	6' O.C.
3/4" - 1"	8' O.C.
1 1/4" OR LARGER	10' O.C.

ALL EXTERIOR PIPING EXPOSED TO THE WEATHER SHALL BE COATED WITH A RUST INHIBITOR - RUSTOLEUM #866 PRO-GUARD PRIMER, RED OR GRAY, OR APPROVED EQUAL.

APPROVED PIPE SUPPORT SYSTEMS:

MIRO MODEL 1.5 WITH SPACERS.
MIRO INDUSTRIES 1-800-768-6978

ADVANCED SUPPORT PRODUCTS
ASP, INC. 1-800-941-5737

VERSABLOCK BY FREEDOM INC., VERSABLOCK.COM
1-866-612-5625 OR 1-208-861-0229

2 ROOF MOUNTED PIPING DETAIL
NTS

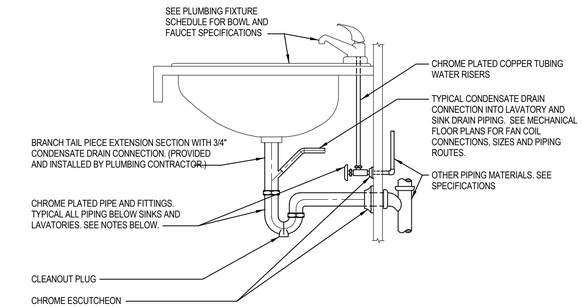

NOTES:

1. INTERIOR EXPOSED PIPE, VALVES AND FIXTURE TRIM, INCLUDING TRIM BEHIND CASEWORK DOORS, SHALL BE CHROME PLATED.
2. ALL PIPING PENETRATIONS THROUGH FINISHED WALLS SHALL BE PROVIDED WITH CHROME ESCUTCHEONS.
3. ALL SINK AND LAVATORY TRAPS SHALL BE PROVIDED WITH A CLEANOUT PLUG IN THE BOTTOM OF THE TRAP.
4. ALL PLUMBING FIXTURES SHALL BE CAULKED AND SEALED TO SURROUNDING SURFACES.
5. PLUMBING CONTRACTOR SHALL VERIFY THE LOCATION OF ALL LAVATORIES AND SINKS THAT NEED TO BE INSTALLED WITH THE BRANCH TAIL PIECE SECTION WITH 3/4" DRAIN CONNECTION. THE PLUMBING CONTRACTOR WILL BE RESPONSIBLE TO VERIFY THE PLUMBING ROUGH-IN DIMENSIONS AND SHALL TAKE INTO ACCOUNT THE TAIL PIECE EXTENSION DIMENSIONS.

3 SINK/LAVATORY TAILPIECE CONDENSATE DETAIL
NTS

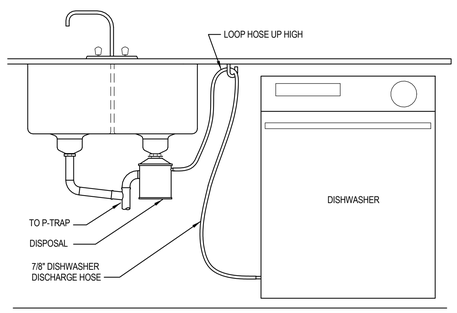

4 DISHWASHER CONNECTION DETAIL
NTS

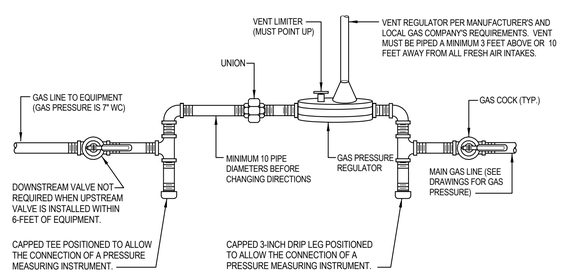

5 GAS PRESSURE REGULATOR DETAIL
NTS

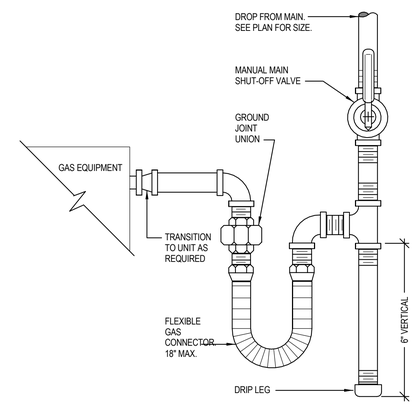

6 GAS LINE CONNECTION DETAIL
NTS

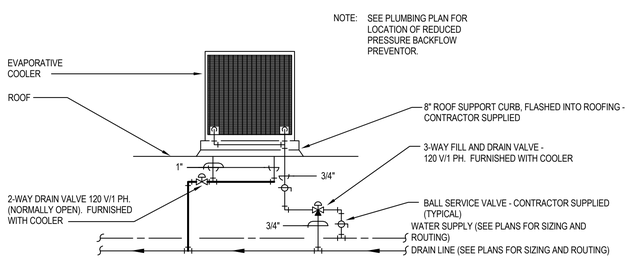

7 EVAPORATIVE COOLER PIPING DETAIL
NTS

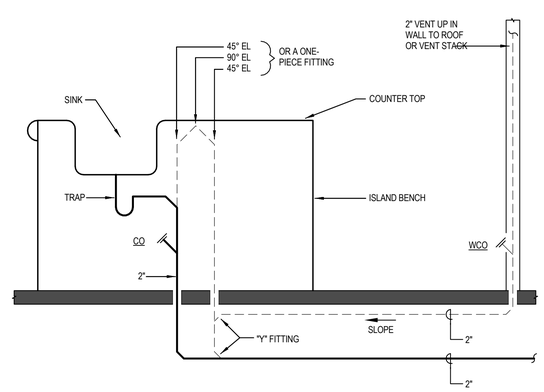

8 ISLAND SINK FOOT VENT DETAIL
NTS

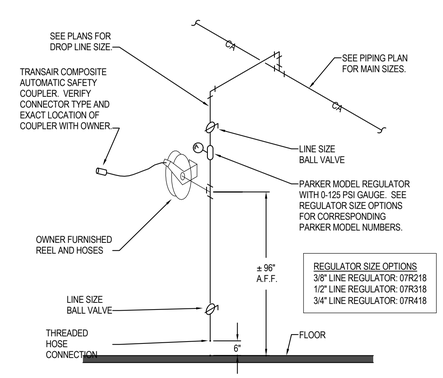

9 COMPRESSED AIR DETAIL
NTS

ARCHITECT:

COLE ARCHITECTS

COLE ARCHITECTS | 802 W. BANNOCK SUIT 208
Boise, ID 83702 | (208) 345-1800

TCA
architecture • planning

TCA | 6211 Roosevelt Way NE
Seattle, WA 98115 | (206) 522-3820

STAMP:

PRELIMINARY
NOT FOR CONSTRUCTION
01-29-16

CONSULTANT:

MUSGROVE ENGINEERING, P.A.
234 S. Whisperwood Way
Boise, Idaho 83709
208.384.0585
www.musgrovepa.com
OVER 30 YEARS OF EXCELLENCE
project number: 15-061

PROJECT INFORMATION:

BOISE CITY OF TREES

BOISE FIRE EST. 1891 DEDICATION

City of Boise Fire Station 4

8485 W Ustick Rd, Boise, ID 83704

REVISIONS:

MARK	DATE	DESCRIPTION

PROJECT PHASE	75% CD'S
PROJECT NUMBER	15-27
PROJECT MANAGER	J. Chatfield
PROJECT ARCHITECT	J. Chatfield
DESIGN	J. Chatfield
DRAWN BY	LR

SHEET NAME:

PLUMBING DETAILS

SHEET NUMBER:

P302

12.07.15

PLUMBING FIXTURE SCHEDULE

SYMBOL	FIXTURE DESCRIPTION	CONNECTION SIZE					MANUFACTURER / MODEL NUMBER / DESCRIPTION / ADDITIONAL COMMENTS
		WASTE	VENT	TRAP	CW	HW	
D-1	DISPOSER	2	1 1/2	1 1/2	--	--	PROVIDED BY OTHERS, INSTALLED BY CONTRACTOR.
DCBP-1	DOUBLE CHECK BACKFLOW PREVENTER	--	--	--	SEE PLANS	--	WATTS SERIES LF 007 DOUBLE CHECK VALVE ASSEMBLY WITH REPLACEABLE SEATS AND SEAT DISCS, CAST BRONZE BODY CONSTRUCTION - 1/2" THRU 2", 2-1/2" THRU 10" 757 SERIES. PROVIDE WITH STRAINER. LEAD FREE.
DF-1	DRINKING FOUNTAIN WITH BOTTLE FILLING STATION (INTERIOR DUAL BUBBLERS) (ELECTRIC WATER COOLER) (ADA COMPLIANT) (HIGH/LOW)	1 1/2	1 1/2	1 1/2	1/2	--	ELKAY MODEL LZSTL8WSLK,HIGH/LOW COOLER WITH BOTTLE FILLING STATION WITH FLEXI-GUARD STREAMSAVER BUBBLER. OPERATED BY FRONT OR SIDE PUSH BARS AND BOTTLE FILLING STATION OPERATED BY SENSOR ACTIVATION WITH AUTOMATIC 30-SECOND SHUT-OFF TIMER. 115 VOLT, 4.5 AMP, 60 HERTZ, AND FILTER. PROVIDE WITH JAY R. SMITH 0834 FLOOR MOUNTED SUPPORT CARRIER.
DW-1	DISHWASHER	--	--	--	--	1/2	PROVIDED BY OTHERS, CONNECT WASTE TO DISPOSAL. SEE DETAIL SHEET P302.
ET-1	EXPANSION TANK	--	--	--	3/4	--	AMTROL THERM-X-TROL ST-12, OR APPROVED EQUAL, NON ASME SERIES THERMAL EXPANSION ABSORBER, ANTIMICROBIAL LINER, AND 5 YEAR WARRANTY.
ES-1	EMERGENCY EYE WASH/ SHOWER COMBINATION (FLOOR MOUNTED) (ADA COMPLIANT)	--	--	--	1	1	ACORN MODEL S2310 BARRIER FREE COMBINATION SHOWER AND EYE WASH, WITH PULL ROPE AND PUSH FLAG. ABS SHOWERHEAD AND EYE/FACE WASH. PROVIDE WITH DUST COVER AND UNIVERSAL SIGN. PROVIDE WITH FD-1 AND MIXING VALVE TMV-33. 1 1/4" T.W.
FCO	FLOOR CLEANOUT	SEE PLANS	--	--	--	--	JAY R. SMITH 4020 SERIES WITH ADJUSTABLE TOP AND ABS PLUG. PROVIDE WITH FIGURE NUMBER 9912 FOR HEIGHT ADJUSTMENT AFTER CONCRETE POUR.
FD-1	FLOOR DRAIN (CONCRETE FLOOR)	2	2	2	--	--	JAY R. SMITH FIGURE NUMBER 2005Y-A05NB: NO-HUB OUTLET, 5" ROUND, NICKEL BRONZE FINISH, WITH ADJUSTABLE STRAINER AND TRAP PRIMER. INSTALL TOP OF DRAIN 1/8" BELOW FINISH FLOOR AND CAULK EDGE.
FS-1	FLOOR SINK (HALF GRATE) (6" DEEP) (FOOT TRAFFIC RATED)	2	2	2	--	--	JAY R. SMITH FIGURE NUMBER 3100Y-12: CAST IRON RECEPTOR, ALUMINUM DOME STRAINER, NICKEL BRONZE GRATE, AND TRAP PRIMER. INSTALL TOP OF SINK 1/8" BELOW FINISH FLOOR AND CAULK EDGE.
GCO	GRADE CLEANOUT (NON-PAVED AREAS)	SEE PLANS	--	--	--	--	JAY R. SMITH 4220 SERIES WITH ABS PLUG.
GCO	GRADE CLEANOUT (PAVED AREAS) (VEHICULAR TRAFFIC)	SEE PLANS	--	--	--	--	JAY R. SMITH 4250 SERIES, ROUND FLANGED HOUSING WITH HEAVY DUTY CAST IRON COVER. FURNISH WITH ABS PLUG. COVER TO BE INSCRIBED "SAN".
HB-1	HOSE BIBB (EXTERIOR) (NON-FREEZE)	--	--	--	3/4	--	WOODFORD MODEL 67 - EXPOSED STYLE WITH MODEL 50HA BACKFLOW PREVENTER, 3/4" INLET, AND CHROME PLATED. PROVIDE WITH TEE KEY AND INSTALL AT 18" ABOVE FINISH GRADE.
HB-2	HOSE BIBB (INTERIOR)	--	--	--	3/4	--	WOODFORD MODEL 26 - EXPOSED STYLE WITH 3/4" INLET, AND CHROME PLATED. PROVIDE WITH METAL WHEEL HANDLE AND WOODFORD MODEL 50HF BACKFLOW PREVENTER.
IM-1	ICE MACHINE	INDIRECT			1/2	--	PROVIDED BY OTHERS, INSTALLED BY CONTRACTOR. PROVIDE WITH REDUCED PRESSURE BACKFLOW PREVENTER.
LAV-1	LAVATORY (COUNTERTOP / CABINET MOUNTED) (ADA COMPLIANT)	1 1/2	1 1/2	1 1/4	1/2	1/2	KOHLER PENNINGTON MODEL K-2196-4: VITREOUS CHINA, COUNTERTOP MOUNTED, HOLES ON 4" CENTERS, AND GRID STRAINER. KOHLER CORALAIS MODEL K-15198: 4 1/2" LONG, SINGLE LEVER FAUCET WITH .5 GPM AERATOR. PROVIDE WITH WATTS SERIES USG-B THERMOSTATIC MIXING VALVE, ASSE STANDARD 1070 LISTED, BRONZE BODY, INTEGRAL CHECK VALVES, AND SELECTABLE TEMPERATURE RANGE FROM 80°F TO 110°F. PROVIDE WITH PIPING INSULATION, TRUEBRO LAV GUARD, PLUMBEREX HANDI-SHIELD, OR EQUAL.
OI-1	OIL AND SAND INTERCEPTOR (1500 GALLONS)	4	3	--	--	--	PRE-CAST CONCRETE, 1500 GALLON CAPACITY, OIL AND SAND INTERCEPTOR. SEE DRAWING FOR DETAILS. NO SPLIT DESIGN VAULTS WITH GASKETS BELOW FLUID LEVEL ALLOWED.
RD-1	ROOF DRAIN (SCUPPER W/ ANGLE METAL GRATE)	--	--	--	--	--	JAY R. SMITH FIGURE NUMBER 1510T, 90° THREADED SIDE OUTLET DRAIN WITH ANGLED GRATE, CAST IRON BODY. PROVIDE WITH DOWNSPOUT ADAPTOR FIGURE NUMBER 1550.
RP-1	RECIRCULATION PUMP (HOT WATER RETURN SYSTEM)	--	--	--	--	3/4	BELL AND GOSSETT BRONZE MODEL NBF-IOS/LW, 115 VOLT, .46 AMPS, 55 WATTS, AND SHALL PROVIDE 4 GPM AT 7 FEET HEAD. INCLUDE 7-DAY PROGRAMMABLE ELECTRONIC TIME CLOCK WITH BATTERY BACKUP, INTERMATIC MODEL GM40AVE. APPROVED ALTERNATE: ARMSTRONG, TACO, GRUNDFOS.
RPBP-1	REDUCED PRESSURE BACKFLOW PREVENTER	INDIRECT			--	--	WATTS SERIES LF009 REDUCED PRESSURE ZONE ASSEMBLY WITH QUARTER TURN BALL VALVES, BRONZE STRAINER, AND AIR GAP. BRONZE BODY CONSTRUCTION - 1/2" THRU 2", PROVIDE WITH STRAINER. LEAD FREE. 2 1/2" THRU 10" 957 SERIES. SEE NOTE 6.
S-1	SINK - SINGLE COMPARTMENT (17" X 22" X 6 1/2") (ADA COMPLIANT)	2	1 1/2	1 1/2	1/2	1/2	ELKAY LUSTERTONE MODEL LRAD-1722: 6 1/2" DEEP STAINLESS STEEL SINK. ELKAY MODEL LK-3001 SINGLE LEVER FAUCET, SWING SPOUT, AND HOSE SPRAY. PROVIDE WITH ELKAY MODEL LK-35 CHROME PLATED TAILPIECE AND STAINLESS STEEL BASKET.
S-2	DECON SINK - DOUBLE COMPARTMENT, TWO DRAINBOARDS (FLOOR MOUNTED)	2	1 1/2	1 1/2	1/2	1/2	ADVANCED TABCO MODEL 94-22-40-18RL, TWO COMPARTMENT, TWO DRAINBOARDS, FLOOR MOUNTED STAINLESS STEEL SINK WITH 14" WATER LEVEL, AND ADJUSTABLE BULLET FEET. PROVIDE WITH CHICAGO FAUCET MODEL DJ18JKABCP, 18" DOUBLE-JOINTED SWING SPOUT AND CHICAGO FAUCET MODEL 629-LESAB SINGLE INLET REMOTE FITTING FOR WALL MOUNTED APPLICATION. PROVIDE CHICAGO FAUCET MODEL 625-SLOABRCF HOT AND COLD WATER PEDAL BOX WITH SHORT PEDALS FOR OPERATION.
S-3	KITCHEN SINK - DOUBLE COMPARTMENT (13" X 16" X 6 1/2" - EACH) (ADA COMPLIANT)	2	1 1/2	1 1/2	1/2	1/2	ELKAY LUSTERTONE MODEL LRAD-3322: 6 1/2" DEEP STAINLESS STEEL SINK. PROVIDE KOHLER K-647-VS SINGLE LEVER, PULL-DOWN, STAINLESS STEEL, SWING SPOUT FAUCET. PROVIDE WITH ELKAY MODEL LK-35 CHROME PLATED TAILPIECE AND STAINLESS STEEL BASKET.
S-4	PREP SINK - SINGLE COMPARTMENT (15" X 15" X 7")	2	1 1/2	1 1/2	1/2	1/2	ELKAY LUSTERTONE MODEL BLR150C: 7" DEEP, STAINLESS STEEL SINK. PROVIDE WITH ELKAY MODEL LKD2223, DUAL HANDLE MIXING FAUCET WITH HIGH GOOSENECK SPOUT AND ELKAY MODEL LK-35 CHROME PLATED TAILPIECE AND STAINLESS STEEL BASKET.
S-5	APPARATUS SINK SINGLE COMPARTMENT (14" X 10" X 5") (WALL MOUNTED)	2	1 1/2	1 1/2	1/2	1/2	ADVANCED TABCO MODEL 7-PS-71, 5" DEEP, WALL-MOUNTED, STAINLESS STEEL SINK. PROVIDE WITH CHICAGO FAUCET MODEL 629-ABCP REMOTE RIGID/SWING GOOSENECK SPOUT. PROVIDE CHICAGO FAUCET MODEL 625-SLOABRCF HOT AND COLD WATER PEDAL BOX WITH SHORT PEDALS FOR OPERATION.
SA-1	SHOCK ABSORBER (WATER HAMMER ARRESTOR)	--	--	--	--	--	JAY R. SMITH FIGURE NUMBER 5005 TO 5050, OR APPROVED EQUAL, SIZED PER FIXTURES SERVED. PROVIDE AN ACCESS PANEL AND A BALL TYPE SHUT-OFF VALVE UPSTREAM OF SHOCK ABSORBER.
SHR-1	SHOWER TRIM (PUBLIC STANDARD)	2	1 1/2	2	1/2	1/2	MOEN MODEL 8375EP15 SINGLE-HANDLE PRESSURE BALANCING SHOWER ONLY (1.5 GPM), POSI-TEMP, 4 PORT CYCLING VALVE WITHOUT VOLUME CONTROL, ADJUSTABLE TEMPERATURE LIMIT STOP, 1/4" TURN STOPS, POLISHED CHROME FINISH, AND VANDAL RESISTANT HEAD, ARM, AND FLANGE.
SHR-2	SHOWER TRIM (ADA COMPLIANT)	2	1 1/2	2	1/2	1/2	ACORN MODEL 538-ADA BARRIER FREE SHOWER. INCLUDES SAFTI-TROL PRESSURE BALANCING MIXING VALVE WITH HIGH LIMIT TEMP. SET TO 110° F, LOW FLOW SHOWER HEAD (1.4 GPM), DIVERTER VALVE, HAND HELD SHOWER SPRAY, FLOW CONTROL, L-SHAPED GRAB BAR, BARRIER FREE ADA COMPLIANT SEAT, SHOWER CURTAIN, INDIVIDUAL STOPS, AND RECESSED SOAP DISH.

PLUMBING FIXTURE SCHEDULE

SYMBOL	FIXTURE DESCRIPTION	CONNECTION SIZE					MANUFACTURER / MODEL NUMBER / DESCRIPTION / ADDITIONAL COMMENTS
		WASTE	VENT	TRAP	CW	HW	
SS-1	SERVICE SINK (36" X 24" X 12") (FLOOR MOUNTED)	3	2	3	1/2	1/2	ACORN TERRAZZO-WARE MODEL TSH-3624: PROVIDE AND INSTALL WITH STAINLESS STEEL BUMPER GUARD, DRAIN GASKET, CHROME FAUCET, 36" HOSE AND WALL HANGER, MOP HANGER, AND 2 SIDE STAINLESS STEEL WALL GUARD.
SS-2	SERVICE SINK (24" X 24" X 12") (FLOOR MOUNTED)	3	2	3	1/2	1/2	ACORN TERRAZZO-WARE MODEL TSH-24: PROVIDE AND INSTALL WITH STAINLESS STEEL BUMPER GUARD, DRAIN GASKET, CHROME FAUCET, 36" HOSE AND WALL HANGER, MOP HANGER, AND 2 SIDE STAINLESS STEEL WALL GUARD.
TD-1	TRENCH DRAIN (10" WIDE) (HEAVY TRAFFIC RATED)	4	2	2	--	--	JAY R. SMITH FIGURE NUMBER 9812 10" WIDE TRENCH DRAIN SYSTEM. SLOPE DRAIN SYSTEM WITH INTEGRAL METAL RAIL, PROVIDE WITH END CAPS, OUTLETS, CATCH BASIN (9812G-880-CB24-BP), AND HEAVY DUTY (CLASS C) GALVANIZED STEEL BAR GRATE (MODEL 9812-G). REFER TO ARCHITECTURAL PLAN FOR EXACT LENGTH REQUIREMENTS.
TP-1	TRAP PRIMER (PRESSURE ACTIVATED) (1 TO 4 TRAPS)	--	--	--	1/2"	--	PRECISION PLUMBING PRODUCTS MODEL CPO-500 WITH DU DISTRIBUTION UNIT IF REQUIRED FOR SERVING MORE THAN ONE TRAP APPROVED ALTERNATES: MIFAB, SIOUX CHIEF, SLOAN, AND ZURN
TP-2	TRAP PRIMER (FLUSH VALVE PRIMER) (1 TRAP)	--	--	--	1/2"	--	PRECISION PLUMBING PRODUCTS MODEL FVP-1VB WITH VACUUM BREAKER. APPROVED ALTERNATES: MIFAB, SIOUX CHIEF, SLOAN, AND ZURN
US-1	UTILITY SINK (24-1/2" X 22" X 13-1/2") (DROP-IN)	2	1 1/2	1 1/2	1/2	1/2	FIAT MOLDED STONE MODEL DL-1. PROVIDE WITH CHICAGO FAUCET MODEL 895-317GN2AABCP SWING GOOSENECK SPOUT, 4" WRISTBLADE HANDLES, AND DRAIN WITH STOPPER.
WB-1	WALL BOX (WATER SUPPLY TO ICE MAKER)	--	--	--	1/2	--	OATEY FIREMASTER MODEL 39121 WITH FACEPLATE, ADJUSTABLE METAL SUPPORT BRACKET, AND WATER HAMMER ARRESTOR. FIRE-RATED, LOW LEAD, OR APPROVED EQUAL.
WB-2	WALL BOX (SUPPLY TO AND DRAIN FROM WASHING MACHINE)	2	1 1/2	2	1/2	1/2	OATEY FIREMASTER MODEL 38478 WITH ADJUSTABLE METAL SUPPORT BRACKET, AND WATER HAMMER ARRESTORS. FIRE RATED, OR APPROVED EQUAL.
WC-1	WATER CLOSET (DUAL FLUSH TANK) (FLOOR MOUNTED) (COMFORT HEIGHT / ADA)	4	2	INT.	1/2	--	KOHLER HIGHLINE MODEL K-3989, DUAL FLUSH, FLOOR MOUNTED, GRAVITY FLUSH TANK WITH ELONGATED BOWL, 1.6 GPF OR 1.1 GPF. PROVIDE KOHLER LUSTRA MODEL K-4650 ELONGATED, OPEN FRONT SEAT WITH CHECK HINGE AND COVER.
WC-2	WATER CLOSET (DUAL FLUSH VALVE) (FLOOR MOUNTED) (COMFORT HEIGHT / ADA COMPLIANT)	4	2	INT.	1	--	KOHLER HIGHCREST MODEL K-4302, FLOOR MOUNTED, FLUSH VALVE WITH ELONGATED BOWL. PROVIDE KOHLER LUSTRA MODEL K-4666-C ELONGATED, OPEN FRONT SEAT WITH CHECK HINGE AND NO COVER. SLOAN DUAL FLUSH FLUSHOMETER MODEL WES-111, 1.6 GPF OR 1.1 GPF.
WCO	WALL CLEANOUT	SEE PLANS	--	--	--	--	JAY R. SMITH 4472T SERIES WITH CAST BRONZE TAPER THREAD PLUG, STAINLESS STEEL ROUND COVER, AND A STAINLESS STEEL VANDAL PROOF SCREW.
WH-1	WATER HEATER (NOMINAL 100 GALLON) (NATURAL GAS - HIGH EFFICIENCY)	--	--	--	SEE PLANS	SEE PLANS	BRADFORD WHITE MODEL EF-100T-199E-3N(A). 199 MBH INPUT, 110V/1Ø, 28" DIAMETER, 78" TALL WITH SIDE CONNECTIONS. PROVIDE WITH PVC CONCENTRIC INTAKE/VENT KIT AND SEISMIC STRAP.

NOTES:

1. ALL ADA COMPLIANT FIXTURES MUST COMPLY WITH ICC/ANSI A117.1. SEE ARCHITECTURAL PLANS FOR HANDICAPPED FIXTURE DESIGNATIONS, LOCATIONS, CLEARANCES, AND MOUNTING HEIGHTS.
2. ALL EXPOSED HW PIPING, CW PIPING, AND DRAIN LINES BENEATH ALL LAVATORIES AND ALL ADA COMPLIANT SINKS MUST BE INSULATED TO PREVENT INJURY. REFER TO ARCHITECTURAL PLANS. INSULATE WITH MOLDED CLOSED CELL VINYL INSULATION - TRUEBRO, PLUMBEREX, OR EQUAL.
3. PROVIDE P-TRAP PRIMERS FOR ALL FLOOR DRAINS AND FLOOR SINKS. PROVIDE A BALL TYPE SHUT-OFF VALVE UPSTREAM OF PRIMER VALVE. SEE SPECIFICATIONS.
4. SEE SPECIFICATIONS FOR ALTERNATE APPROVED MANUFACTURERS.
5. HIGH EFFICIENCY WATER HEATERS: PROVIDE WITH CONDENSATE NEUTRALIZATION KIT BY JJM BOILER WORKS MODEL JM (OR EQUAL), SIZED PER EQUIPMENT CAPACITY.
6. BACKFLOW PREVENTION: THIS BUILDING IS PROVIDED WITH A BACKFLOW PREVENTION DEVICE ON THE MAIN WATER SERVICE AND REDUCED PRESSURE BACKFLOW PREVENTION ON THE FOLLOWING PIECES OF EQUIPMENT:
   EVAPORATIVE COOLER
   ICE MACHINE

GAS SIZING CHART

SYMBOL	INPUT (MBH)	RUNOUT SIZE (2PSI) (INCHES)	EQUIPMENT CONNECTION SIZES (7" WC) (INCHES)
RH-1	100.0	3/4"	3/4"
RH-2	100.0	3/4"	3/4"
RH-3	100.0	3/4"	3/4"
WH-1	199.0	3/4"	3/4"
GAS RANGE	80.1	3/4"	3/4"
GAS BARBECUE	50.0	1/2"	1/2"
GAS SMOKER	35.0	1/2"	1/2"
TOTAL	664.1	EQUIVALENT LENGTH = 250 FT PRESSURE = 2 PSI MAIN SIZE = 1"Ø	

NOTE: GAS SIZES TO EQUIPMENT ARE AS NOTED IN SCHEDULE ABOVE. ROUTE NOTED (2PSI) GAS LINE TO GAS EQUIPMENT. PROVIDE GAS COCK AND PRESSURE REGULATOR (2 PSI-7" WC) SIZED FOR GAS LOAD AT EACH PIECE OF EQUIPMENT. VENT TO ATMOSPHERE PER MANUFACTURERS RECOMMENDATIONS. ROUTE NOTED (7" WC) GAS LINE TO GAS FIRED EQUIPMENT WITH GAS COCK AND FLEX CONNECTOR AT UNIT. SEE GAS CONNECTION DETAILS ON SHEET P401.

ARCHITECT:

COLE ARCHITECTS

COLE ARCHITECTS | 802 W. BANNOCK SUIT 208
Boise, ID 83702 | (208) 345-1800

TCA architecture • planning

TCA | 6211 Roosevelt Way NE
Seattle, WA 98115 | (206) 522-3820

STAMP:

PRELIMINARY
NOT FOR CONSTRUCTION
01-29-16

CONSULTANT:

MUSGROVE ENGINEERING, P.A.
234 S. Whisperwood Way
Boise, Idaho 83709
208.384.0585
www.musgrovepa.com
OVER 30 YEARS OF EXCELLENCE
project number: 15-061

PROJECT INFORMATION:

BOISE CITY OF TREES

BOISE FIRE Est. 1891 DEDICATION PROGRESS PROTECTION

City of Boise Fire Station 4

8485 W Ustick Rd, Boise, ID 83704

REVISIONS:

MARK	DATE	DESCRIPTION

PROJECT PHASE	75% CD'S
PROJECT NUMBER	15-27
PROJECT MANAGER	J. Chatfield
PROJECT ARCHITECT	J. Chatfield
DESIGN	J. Chatfield
DRAWN BY	LR

SHEET NAME:

PLUMBING SCHEDULES

SHEET NUMBER:

P401

12.07.15

ELECTRICAL LEGEND - LIGHTING

REFERENCE FIXTURE SCHEDULE FOR MOUNTING TYPE, MOUNTING HEIGHT, AND FIXTURE TYPE.

- DOUBLE FACE EXIT SIGN, CEILING MOUNTED, PROVIDE UNSWITCHED CONDUCTOR.
- WALL MOUNTED DOUBLE FACE EXIT SIGN PROVIDE UNSWITCHED CONDUCTOR. MOUNT AT +8'-0" UNO.
- SINGLE FACE EXIT SIGN, CEILING MOUNTED PROVIDE UNSWITCHED CONDUCTOR.
- WALL MOUNTED SINGLE FACE EXIT SIGN PROVIDE UNSWITCHED CONDUCTOR. MOUNT AT +8'-0" UNO.
- ARROW INDICATES DIRECTION TO BE SHOWN ON SIGN.
- 1'X4' LIGHT FIXTURE.
- 1'X4' LIGHT FIXTURE, PROVIDE EMERGENCY BALLAST CONNECTED TO AN UNSWITCHED CONDUCTOR.
- 2'X4' LIGHT FIXTURE.
- 2'X4' LIGHT FIXTURE, PROVIDE EMERGENCY BALLAST CONNECTED TO AN UNSWITCHED CONDUCTOR.
- 2'X2' LIGHT FIXTURE.
- 2'X2' LIGHT FIXTURE, PROVIDE EMERGENCY BALLAST CONNECTED TO AN UNSWITCHED CONDUCTOR.
- STRIP FLUORESCENT LIGHT FIXTURE. SEE SCHEDULE FOR LENGTH.
- STRIP FLUORESCENT LIGHT FIXTURE. SEE SCHEDULE FOR LENGTH. PROVIDE EMERGENCY BALLAST CONNECTED TO AN UNSWITCHED CONDUCTOR
- WALL MOUNTED LIGHT FIXTURE.
- WALL MOUNTED LIGHT FIXTURE, PROVIDE EMERGENCY BALLAST CONNECTED TO AN UNSWITCHED CONDUCTOR.
- RECESSED LIGHT FIXTURE
- RECESSED LIGHT FIXTURE. PROVIDE EMERGENCY BALLAST CONNECTED TO AN UNSWITCHED CONDUCTOR.
- ROUND LIGHT FIXTURE
- ROUND EMERGENCY LIGHT FIXTURE
- WALL MOUNTED LIGHT FIXTURE.
- WALL MOUNTED EMERGENCY LIGHT FIXTURE.
- POLE LIGHT 1 HEAD WITH POLE
- TC — TIME CLOCK
- PC — PHOTO CONTROL CELL LOCATED 12" ABOVE ROOF FACING NORTH.
- OS — OCCUPANCY SENSOR. PROVIDE RELAYS AND POWER PACKS AS REQUIRED
- D — LED DRIVER
- EMERGENCY EGRESS LIGHTING WITH OUT FIXTURE HEADS. CONNECT TO AN UNSWITCHED CONDUCTOR.
- EMERGENCY EGRESS LIGHTING. CONNECT TO AN UNSWITCHED CONDUCTOR.
- XXX — INDICATES FIXTURE TYPE. REFER TO FIXTURE SCHEDULE.
- EXTERIOR WALL PACK
- EMERGENCY EXTERIOR WALL PACK. PROVIDE EMERGENCY BALLAST CONNECTED TO AN UNSWITCHED CONDUCTOR

SECURITY

- ADJUSTABLE CAMERA (PAN/TILT/ZOOM)
- FIXED CAMERA
- CAMERA IN OUTDOOR HOUSING
- ADJUSTABLE CAMERA (PAN/TILT/ZOOM) IN OUTDOOR HOUSING
- C — CCTV OUTLET, +18" UNO
- C — CEILING MOUNTED CCTV OUTLET
- K — SECURITY SYSTEM KEYPAD CONTROLLER COORDINATE BOX SIZE AND MUDRING WITH VENDOR
- CR — CARD READER
- M — CEILING MOUNTED MOTION SENSOR
- M +80" — WALL MOUNTED MOTION SENSOR, MOUNTING HEIGHT INDICATED
- O — PANIC BUTTON - MOUNTED UNDER COUNTER

NOTE:	THIS IS A STANDARD LIST OF COMMONLY USED ELECTRICAL SYMBOLS. SOME OF THE SYMBOLS SHOWN MAY NOT HAVE BEEN USED IN THIS DRAWING PACKAGE.

DEVICES

- S — SWITCH, TYPE AS INDICATED. +46"AFF
  - 2 DOUBLE POLE
  - 3 3-WAY
  - 4 4-WAY
  - K KEYED
  - P PILOT LIGHT
  - D DIMMER
  - HP HORSEPOWER RATED
  - TO THERMAL OVERLOAD
  - LV LOW VOLTAGE
  - OS OCCUPANCY SENSOR
  - OR LOW VOLTAGE, MOMENTARY OVERRIDE
  - VS VACANCY SENSOR
  - a SUPERSCRIPT INDICATES LIGHTS TO BE SWITCHED TOGETHER
- S S — DUAL LEVEL SWITCHING, INSIDE AND OUTSIDE LAMPS OF FIXTURE TO BE SWITCHED SEPARATELY.
- S — DUAL LEVEL SWITCHING WITH OCCUPANCY SENSOR, INSIDE AND OUTSIDE LAMPS OF FIXTURE TO BE SWITCHED SEPARATELY.
- SINGLE CONVENIENCE OUTLET, +18" AFF UNO
- DUPLEX CONVENIENCE OUTLET, +18" AFF UNO
- FLOOR MOUNT DUPLEX CONVENIENCE OUTLET
- EMERGENCY DUPLEX CONVENIENCE OUTLET, +18" AFF UNO
- SWITCHED DUPLEX CONVENIENCE OUTLET, +18" AFF UNO
- FOURPLEX CONVENIENCE OUTLET. +18"AFF UNO
- FLOOR MOUNT FOURPLEX CONVENIENCE OUTLET
- CONNECTION POINT TO EQUIPMENT SPECIFIED, ELECTRICAL CONTRACTOR TO SUPPLY RACEWAY AND CONDUCTORS AND MAKE FINAL CONNECTION TO EQUIPMENT UNDER THIS SECTION. UNO
- J — JUNCTION BOX
- WALL MOUNTED PUSH BUTTON, MOUNT AT SWITCH HEIGHT UNO
- WALL MOUNTED PUSH BUTTON, MOUNT AT SWITCH HEIGHT UNO
- MOTOR STARTER/CONTACTOR, SIZE/POLES NEMA 1 UNO AS INDICATED
- COMBINATION STARTER AND DISCONNECT, SIZE/POLES, STARTER SIZE AS INDICATED, NEMA 1 UNO
- F — FUSED DISCONNECT SWITCH, SIZE/POLES, FUSE SIZES AS INDICATED, NEMA 1 UNO
- NON-FUSED DISCONNECT SIZE/ POLES AS INDICATED, NEMA 1 UNO
- T XX — THERMOSTAT, +46" AFF PROVIDE CONDUIT, J-BOX, CONDUCTORS AS REQUIRED TO CONTROL ASSOCIATED UNITS. UNO COORDINATE WITH DIVISION 15.
- T — TRANSFORMER
- PANELBOARD. SEE SCHEDULE FOR TYPE.
- EQUIPMENT CABINET, SURFACE MOUNTED
- EQUIPMENT CABINET FLUSH MOUNTED
- SURFACE MULTI-OUTLET RACEWAY
- # # — MECHANICAL EQUIPMENT CALL OUT

CIRCUITING SYMBOLS

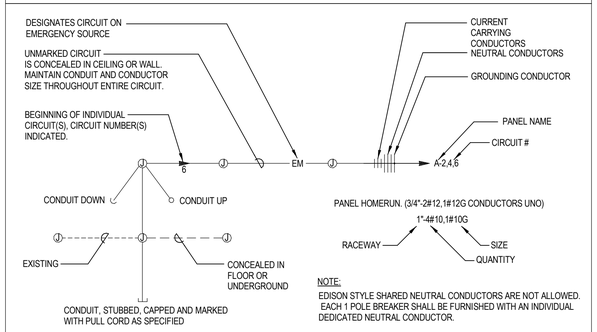

NOTE:
EDISON STYLE SHARED NEUTRAL CONDUCTORS ARE NOT ALLOWED. EACH 1 POLE BREAKER SHALL BE FURNISHED WITH AN INDIVIDUAL DEDICATED NEUTRAL CONDUCTOR.

ONE LINE

- DELTA WYE TRANSFORMER UNO
- # PANEL NAME VOLTAGE PHASE — PANEL BOARD, SEE SCHEDULE FOR TYPE AND SIZE
- ##A #P — CIRCUIT BREAKER, SIZE AND POLES INDICATED
- 125A 3P — INDIVIDUAL BREAKER WITH SHUNT TRIP, SIZE AND POLES INDICATED. NEMA 1 UNO
- 125A 3P — INDIVIDUAL BREAKER, SIZE AND POLES INDICATED. NEMA 1 UNO
- GFP — GROUND FAULT PROTECTION
- TVSS — TRANSIENT VOLTAGE SURGE SUPPRESSION
- LSIGR — ADJUSTABLE BREAKER SETTINGS (PER SPECIFICATIONS): 'L'-LONG TIME 'S'-SHORT TIME 'I'-INSTANTANEOUS 'G'-GROUND FAULT 'R'-ENERGY REDUCING MAINTENANCE SWITCH W/STATUS INDICATOR
- GROUND
- ST — SHUNT TRIP COIL
- M — MOTOR
- OVERHEAD SERVICE DROP
- XXXA/XP XXXKW/XXKV — GENERATOR SET, MAIN BREAKER SIZE INDICATED
- AUTOMATIC TRANSFER SWITCH (ATS)
- METER AND BASE
- N — NEUTRAL
- T — TRANSFORMER
- PAD MOUNT TRANSFORMER

FIRE ALARM

- F — PULL STATION, +44" AFF WITH PRE-ALARM COVER
- F — FIRE ALARM HORN, +84" AFF UNO
- F 15 — FIRE ALARM STROBE, +84" AFF UNO, STROBE INTENSITY INDICATED. 'C' INDICATES CEILING MOUNTED
- F 15 — FIRE ALARM HORN/STROBE +84" AFF, UNO, STROBE INTENSITY INDICATED. 'C' INDICATES CEILING MOUNTED
- F — FIRE ALARM BELL, +84" AFF UNO. 'C' INDICATES CEILING MOUNTED
- F — FIRE ALARM CHIME, +84" AFF UNO. 'C' INDICATES CEILING MOUNTED
- F 15 — FIRE ALARM CHIME/STROBE, +84" AFF UNO, STROBE INTENSITY INDICATED. 'C' INDICATES CEILING MOUNTED
- F — SPEAKER STROBE, +84" AFF UNO. 'C' INDICATES CEILING MOUNTED
- EOL — END OF LINE RESISTOR
- FS — FLOW SWITCH, PROVIDE MONITOR MODULE AS REQUIRED
- TS — TAMPER SWITCH, PROVIDE MONITOR MODULE AS REQUIRED
- PS — PRESSURE SWITCH, PROVIDE MONITOR MODULE AS REQUIRED
- FSA — FIRE SYSTEM ANNUNCIATOR, FLUSH MOUNTED +54"UNO
- PIV — POST INDICATOR VALVE, PROVIDE MONITOR MODULE AS REQUIRED
- DH — ELECTROMAGNETIC DOOR HOLDER
- R — RELAY
- CM — CONTROL MODULE
- MM — MONITOR MODULE
- FIRE ALARM KNOX BOX
- FIRE ALARM CONTROL PANEL
- NAC EXTENDER PANEL
- F — FIRE/SMOKE DAMPER
- F — LED INDICATOR LIGHT, CEILING MOUNTED UNO
- F T — LED INDICATOR LIGHT WITH TEST SWITCH, CEILING MOUNTED UNO
- SD — DUCT-MOUNTED SMOKE DETECTOR
- F # — SMOKE DETECTOR, CEILING MOUNTED UNO
  - H HEAT
  - I IONIZATION
  - ID IN DUCT
  - P PHOTOELECTRIC
  - R RELAY
  - WG PROVIDE PROTECTIVE WIRE GUARD
- BS,BR — BEAM DETECTOR, SENDER & RECEIVER

COMMUNICATIONS

- #D,#T — TELEPHONE/DATA OUTLET, +18" AFF UNO, FOUR-SQUARE DEEP TYPE BOX WITH SINGLE GANG MUDRING. WITH QUANTITY OF DATA (#D) AND TELEPHONE (#T) CABLES INDICATED
- FLOOR MOUNTED TELEPHONE/DATA OUTLET
- IC — INTERCOM
- S — CEILING MOUNTED SPEAKER WITH BACKBOX
- S — WALL MOUNTED SPEAKER, WITH BACKBOX +80" UNO
- V — VOLUME CONTROL, MOUNT AT SWITCH HEIGHT UNO. FOUR-SQUARE DEEP TYPE BOX WITH SINGLE GANG MUDRING
- TV — TELEVISION OUTLET, +18" AFF UNO. FOUR-SQUARE TYPE BOX WITH SINGLE GANG MUDRING
- TV — CEILING MOUNTED TELEVISION OUTLET
- TTB — TELEPHONE TERMINAL BOARD

ELECTRICAL SHEET INDEX	
Sheet Number	**Sheet Name**
E000	ELECTRICAL COVER SHEET
E001	LIGHTING COMPLIANCE REPORT
E101	ELECTRICAL SITE PLAN
E201	1ST FLOOR FIRE ALARM PLAN
E202	2ND FLOOR FIRE ALARM PLAN
E203	1ST FLOOR LIGHTING PLAN
E204	2ND FLOOR LIGHTING PLAN
E205	1ST FLOOR MECHANICAL POWER PLAN
E206	2ND FLOOR MECHANICAL POWER PLAN
E207	1ST FLOOR POWER PLAN
E208	2ND FLOOR POWER PLAN
E209	1ST FLOOR SPECIAL SYSTEMS PLAN
E210	2ND FLOOR SPECIAL SYSTEMS PLAN
E300	ELECTRICAL ROOF PLAN
E400	ONE-LINE DIAGRAM/ELECTRICAL SCHEDULES
E401	ELECTRICAL SCHEDULES
E402	ELECTRICAL SCHEDULES
E500	ELECTRICAL DETAILS
E501	ELECTRICAL DETAILS
E502	ELECTRICAL DETAILS

ELECTRICAL ABBREVIATIONS

A	AMPERES
AC	6" ABOVE BACKSPLASH
AFF	ABOVE FINISHED FLOOR
AFG	ABOVE FINISHED GRADE
AF	AMP FRAME
AIC	AMPS INTERRUPTING CAPACITY
AT	AMP TRIP
ATS	AUTOMATIC TRANSFER SWITCH
AWG	AMERICAN WIRE GAUGE
C	CEILING MOUNTED
C	CONDUIT
CB	CIRCUIT BREAKER
CF	COMPACT FLUORESCENT
CKT	CIRCUIT
CO	CONDUIT ONLY, PROVIDE PULL-LINE
CT	CURRENT TRANSFORMER
CTL	CONTROL
DC	DIRECT CURRENT
(D)	DEMOLITION
DEMO	DEMOLITION
DET	DETAIL
E	EMERGENCY
(E)	EXISTING
EC	ELECTRICAL CONTRACTOR
EL	EMERGENCY LIGHT
(F)	FUTURE
FACP	FIRE ALARM CONTROL PANEL
G/GND	GROUND
GFCI	GROUND FAULT CIRCUIT INTERRUPTER
GFI	GROUND FAULT INTERRUPTER
HH	HAND HOLE
HOA	HAND-OFF-AUTO
HVAC	HEATING, VENTILATION, & AIR CONDITIONING
IG	ISOLATED GROUND
IPCO	IDAHO POWER COMPANY
J-BOX	JUNCTION BOX
KA	KILOAMP
KVA	KILO VOLT-AMP
KW	KILOWATT
KWH	KILOWATT HOUR
LCP	LIGHTING CONTROL PANEL
MB	MAIN BREAKER
MBR	MAIN CIRCUIT BREAKER
MCC	MOTOR CONTROL CENTER
MDP	MAIN DISTRIBUTION PANEL
MLO	MAIN LUGS ONLY
MH	METAL HALIDE
MSB	MAIN SWITCH BOARD
MTG	MOUNTING
N	NEUTRAL
(N)	NEW
NC	NORMALLY CLOSED
NEC	NATIONAL ELECTRICAL CODE
NIC	NOT IN CONTRACT
NL	NIGHT LIGHT
NO	NORMALLY OPEN
NTS	NOT TO SCALE
OH	OVERHEAD
OS	OCCUPANCY SENSOR
P	POLES
PC	PHOTO-CONTROL
PVC	POLYVINYL CHLORIDE
PWR	POWER
RE-	REFERENCE
REC	RECEPTACLE
(R)	RELOCATED
SF	SQUARE FEET
TBD	TO BE DETERMINED
TDR	TIME DELAY RELAY
TK	TOE KICK
TSP	TWISTED SHIELDED PAIR
TRT	TRIPLE TUBE
TTB	TELEPHONE TERMINAL BOARD
(TYP.)	TYPICAL
UC	UNDERCABINET
UG	UNDERGROUND
U.N.O.	UNLESS NOTED OTHERWISE
V	VOLT
VA	VOLT-AMPERE
W	WATT
WG	WIRE GUARD
WP	WEATHER PROOF/NEMA 3R
PROVIDED/ PROVIDE BY INSTALLED/ INSTALL	PROVIDE AND INSTALL / PROVIDED AND INSTALLED BY / PROVIDE AND INSTALL
NOTE:	THIS IS A STANDARD LIST OF COMMONLY USED ELECTRICAL ABBREVIATIONS. SOME OF THE ABBREVIATIONS SHOWN ABOVE MAY NOT BE USED IN THIS DRAWING PACKAGE.

ARCHITECT:

COLE ARCHITECTS

COLE ARCHITECTS | 802 W. BANNOCK SUIT 208
Boise, ID 83702 | (208) 345-1800

TCA architecture • planning

TCA | 6211 Roosevelt Way NE
Seattle, WA 98115 | (206) 522-3820

STAMP:

PRELIMINARY

NOT FOR CONSTRUCTION
01-29-16

CONSULTANT:

MUSGROVE ENGINEERING, P.A.
234 S. Whisperwood Way
Boise, Idaho 83709
208.384.0585
www.musgrovepa.com
OVER 30 YEARS OF EXCELLENCE
project number: 15-061

PROJECT INFORMATION:

City of Boise Fire Station 4

8485 W Ustick Rd, Boise, ID 83704

REVISIONS:

MARK	DATE	DESCRIPTION

PROJECT PHASE	75% CD'S
PROJECT NUMBER	15-27
PROJECT MANAGER	J. Chatfield
PROJECT ARCHITECT	J. Chatfield
DESIGN	J. Chatfield
DRAWN BY	RM/TM

SHEET NAME:

ELECTRICAL COVER SHEET

SHEET NUMBER:

E000

12.07.15

ENERGY CODE COMMISSIONING COMPLIANCE NOTES

SECTION 408 SYSTEM COMMISSIONING

IT SHALL BE THE ELECTRICAL CONTRACTOR'S RESPONSIBILITY TO PROVIDE ALL BELOW NOTED DOCUMENTS WITHIN 90 DAYS OF CERTIFICATE OF OCCUPANCY:

A. AS-BUILT DRAWINGS - DRAWINGS SHALL INCLUDE THE LOCATION AND PERFORMANCE DATA OF ALL PIECES OF MECHANICAL EQUIPMENT.

B. OPERATING AND MAINTENANCE MANUALS - MANUALS SHALL INCLUDE THE FOLLOWING:

1. SUBMITTAL DATA ON ALL PIECES OF EQUIPMENT REQUIRING MAINTENANCE.
2. MANUFACTURER'S OPERATIONS AND MAINTENANCE DATA ON ALL PIECES OF EQUIPMENT. ROUTINE MAINTENANCE ACTIONS SHALL BE CLEARLY IDENTIFIED.
3. NAME AND ADDRESS AND PHONE NUMBER OF OF AT LEAST ONE (1) SERVICE PROVIDED.
4. LIGHTING CONTROL SYSTEMS MAINTENANCE AND CALIBRATION INFORMATION INCLUDING WIRING DIAGRAMS, EQUIPMENT AND SYSTEM SCHEMATICS, AND CONTROL SEQUENCES OF OPERATIONS. DESIRED OR FIELD DETERMINED SETPOINTS SHALL BE PERMANENTLY RECORDED ON CONTROL DRAWINGS AT ALL CONTROL DEVICES, OR FOR DIGITAL CONTROL SYSTEMS, IN THE SYSTEM PROGRAMMING INSTRUCTIONS.
5. A NARRATIVE ON HOW EACH LIGHTING SYSTEM IN INTENDED TO OPERATE, INCLUDING RECOMMENDED SETPOINTS.

C. LIGHTING SYSTEM FUNCTIONAL TESTING REQUIREMENTS

FUNCTIONAL TESTING - ALL AUTOMATIC LIGHTING CONTROL SYSTEM SHALL BE FULLY TESTED TO ENSURE THE CONTROL HARDWARE AND SOFTWARE ARE CALIBRATED, ADJUSTED, PROGRAMMED, AND IN PROPER WORKING CONDITION IN ACCORDANCE WITH THE CONSTRUCTION DOCUMENTS AND MANUFACTURER'S INSTALLATION INSTRUCTIONS.

THE APPROVED PARTY THAT WILL CONDUCT THE FUNCTIONAL TESTING ON THE AUTOMATIC LIGHTING CONTROL SYSTEM SHALL BE DEFERRED.

WHERE OCCUPANT SENSORS, TIME SWITCHES, PROGRAMMABLE CONTROLS, PHOTOSENSORS OR DAYLIGHTING CONTROLS ARE INSTALLED, THE FOLLOWING PROCEDURES SHALL BE PREFORMED:

1. CONFIRM THAT THE PLACEMENT, SENSITIVITY AND TIME-OUT ADJUSTMENTS FOR OCCUPANT SENSORS YIELD ACCEPTABLE PERFORMANCE.
2. CONFIRM THAT THE TIME SWITCHES AND PROGRAMMABLE SCHEDULE CONTROLS ARE PROGRAMMED TO TURN THE LIGHTS OFF.
3. CONFIRM THAT THE PLACEMENT AND SENSITIVITY ADJUSTMENTS FOR PHOTOSENSOR CONTROLS REDUCE ELECTRIC LIGHT BASED ON THE AMOUNT OF USABLE DAYLIGHT IN THE SPACE AS SPECIFIED.

D. FINAL LIGHTING SYSTEM FUNCTIONAL REPORT - A REPORT OF TEST PROCEDURES AND RESULTS IDENTIFIED AS THE "FINAL LIGHTING CONTROL REPORT" SHALL BE DELIVERED TO THE BUILDING OWNER. THE REPORT SHALL INCLUDE THE FOLLOWING:

1. LIST OF FUNCTIONAL TESTS USED DURING THE COMMISSIONING PROCESS ON EACH PIECE OF EQUIPMENT.
2. RESULTS OF ALL FUNCTIONAL TESTS ON ALL PIECES OF EQUIPMENT.
3. LIST OF DEFICIENCIES FOUND AND CORRESPONDING CORRECTIVE MEASURES EITHER IMPLEMENTED OR PROPOSED ON EACH PIECE OF EQUIPMENT.
4. LIST OF EQUIPMENT NOT ABLE TO BE FUNCTIONALLY TESTED DUE TO CURRENT CLIMATE CONDITIONS. THESE PIECES OF EQUIPMENT WILL FUNCTIONALLY TESTED ONCE CLIMATE CHANGES ALLOW.

ARCHITECT:

COLE ARCHITECTS

COLE ARCHITECTS | 802 W. BANNOCK SUIT 208
Boise, ID 83702 | (208) 345-1800

TCA

architecture • planning

TCA | 6211 Roosevelt Way NE
Seattle, WA 98115 | (208) 522-3820

STAMP:

PRELIMINARY

NOT FOR CONSTRUCTION
01-29-16

CONSULTANT:

MUSGROVE
ENGINEERING, P.A.
234 S. Whisperwood Way
Boise, Idaho 83709
208.384.0585
www.musgrovepa.com
OVER 30 YEARS OF EXCELLENCE
project number: 15-061

PROJECT INFORMATION:

BOISE CITY OF TREES

BOISE FIRE DEDICATION

City of Boise Fire Station 4

8485 W Ustick Rd, Boise, ID 83704

REVISIONS:

MARK	DATE	DESCRIPTION

PROJECT PHASE	75% CD'S
PROJECT NUMBER	15-27
PROJECT MANAGER	J. Chatfield
PROJECT ARCHITECT	J. Chatfield
DESIGN	J. Chatfield
DRAWN BY	RM/TM

SHEET NAME:

LIGHTING COMPLIANCE REPORT

SHEET NUMBER:

E001

12.07.15

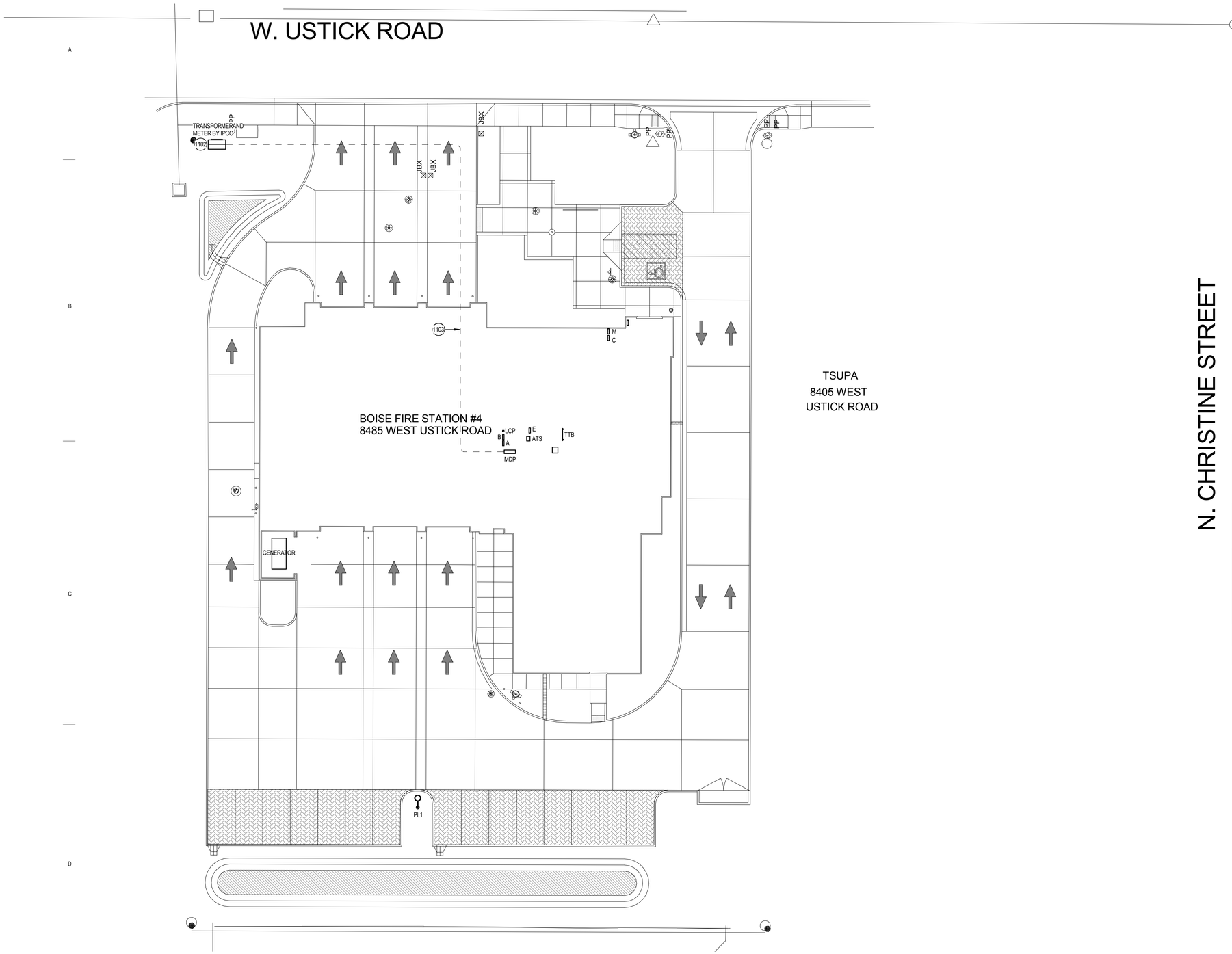

ELECTRICAL SITE PLAN
1/16" = 1'-0"

GENERAL NOTES

A. CONTRACTOR SHALL COORDINATE WITH AN UNDERGROUND LOCATING SERVICE PRIOR TO COMMENCING WORK. COORDINATE WITH OTHER SITE DISCIPLINES.

B. ROUTE CONDUITS IN COMMON TRENCH WHERE POSSIBLE. RE:TRENCHING DETAIL.

C. SEE ARCHITECTURAL AND CIVIL DRAWINGS FOR ADDITIONAL INFORMATION.

D. SITE LIGHTING AND UTILITY EQUIPMENT SHOWN IN APPROXIMATE LOCATION. COORDINATE EXACT LOCATION WITH CIVIL DRAWINGS, PROPERTY LINES, AND UTILITY COMPANIES PRIOR TO ROUGH-IN.

E. PROVIDE PULL-LINE IN ALL EMPTY CONDUITS.

KEYED NOTES

SYMBOL USED FOR NOTE CALLOUT.

1102 PAD MOUNTED TRANSFORMER, PAD, AND METER BY IDAHOP POWER COMPANY.
1103 UNDERGROUND SECONDARY. RE:ONE-LINE

ARCHITECT:

COLE ARCHITECTS

COLE ARCHITECTS | 802 W. BANNOCK SUIT 208
Boise, ID 83702 | (208) 345-1800

TCA

architecture • planning

TCA | 6211 Roosevelt Way NE
Seattle, WA 98115 | (208) 522-3820

STAMP:

PRELIMINARY
NOT FOR CONSTRUCTION
01-29-16

CONSULTANT:

MUSGROVE ENGINEERING, P.A.
234 S. Whisperwood Way
Boise, Idaho 83709
208.384.0585
www.musgrovepa.com
OVER 30 YEARS OF EXCELLENCE
project number: 15-061

PROJECT INFORMATION:

BOISE CITY OF TREES

BOISE FIRE Est. 1891 PROTECTION PREVENTION EDUCATION DEDICATION

City of Boise Fire Station 4

8485 W Ustick Rd, Boise, ID 83704

REVISIONS:

MARK	DATE	DESCRIPTION

PROJECT PHASE	75% CD'S
PROJECT NUMBER	15-27
PROJECT MANAGER	J. Chatfield
PROJECT ARCHITECT	J. Chatfield
DESIGN	J. Chatfield
DRAWN BY	RM/TM

SHEET NAME:

ELECTRICAL SITE PLAN

SHEET NUMBER:

E101

12.07.15

1ST FLOOR FIRE ALARM
1/8" = 1'-0"

GENERAL NOTES

A. INSTALL PLENUM RATED FIRE ALARM CONDUCTORS FROM DEVICES INDICATED TO FIRE ALARM CONTROL PANEL OR NAC EXTENDER PANEL(S) AS REQUIRED. STUB 3/4" CONDUIT FROM DEVICE TO VOID ABOVE CEILING. PROVIDE NAC EXTENDER PANELS (QUANTITY AS REQUIRED) IN LOCATIONS INDICATED AND CIRCUITING AS REQUIRED FOR A COMPLETE INSTALLATION. CIRCUIT THE FIRE ALARM NOTIFICATION AND INITIATION DEVICES PER THE ELECTRICAL SPECIFICATIONS. FURNISH AND INSTALL ALL APPURTENANCES AND PROGRAMMING REQUIRED FOR A COMPLETE AND OPERATIONAL SYSTEM. REFER TO ELECTRICAL FIRE ALARM SPECIFICATIONS FOR SYSTEM REQUIREMENTS AND SUBMITTAL PROCEDURES.

B. ALL CONDUIT AND JUNCTION BOXES ARE TO BE CONCEALED IN NEW WALLS, EXISTING FURRED OUT WALLS AND EXISTING ACCESSIBLE CEILINGS. USE OF SURFACE MOUNTED RACEWAYS MUST BE APPROVED BY THE ARCHITECT FOR EACH LOCATION. WHERE APPROVED, UTILIZE WIREMOLD OR APPROVED EQUAL SURFACE MOUNTED RACEWAYS PAINTED TO MATCH SURROUNDING WALLS.

KEYED NOTES

SYMBOL USED FOR NOTE CALLOUT.

601 FIRE ALARM CONTROL PANEL.
602 TO FIRE ALARM CONTROL PANEL.
603 PROVIDE RED HANDLE, LOCKOUT TYPE CIRCUIT BREAKER IN PANEL AT POSITION INDICATED.
605 COORDINATE QUANTITY OF TAMPER SWITCHES, FLOW SWITCHES, AND PRESSURE SWITCHES WITH FIRE SPRINKLER CONTRACTOR. PROVIDE ALL REQUIRED MONITOR MODULES.
607 FLUSH MOUNTED REMOTE ANNUNCIATOR AT +54". CONTRACTOR SHALL VERIFY LOCATION OF ANNUNCIATOR PANEL WITH LOCAL FIRE MARSHAL PRIOR TO ROUGH-IN.

ARCHITECT:

COLE ARCHITECTS
COLE ARCHITECTS | 802 W. BANNOCK SUIT 208
Boise, ID 83702 | (208) 345-1800

TCA
architecture • planning
TCA | 6211 Roosevelt Way NE
Seattle, WA 98115 | (206) 522-3820

STAMP:

PRELIMINARY
NOT FOR CONSTRUCTION
01-29-16

CONSULTANT:

MUSGROVE ENGINEERING, P.A.
234 S. Whisperwood Way
Boise, Idaho 83709
208.384.0585
www.musgrovepa.com
OVER 30 YEARS OF EXCELLENCE
project number: 15-061

PROJECT INFORMATION:

BOISE CITY OF TREES
BOISE FIRE EST. 1870 DEDICATION PROFESSIONALISM

City of Boise Fire Station 4
8485 W Ustick Rd, Boise, ID 83704

REVISIONS:

MARK	DATE	DESCRIPTION

PROJECT PHASE	75% CD'S
PROJECT NUMBER	15-27
PROJECT MANAGER	J. Chatfield
PROJECT ARCHITECT	J. Chatfield
DESIGN	J. Chatfield
DRAWN BY	RM/TM

SHEET NAME:

1ST FLOOR FIRE ALARM PLAN

SHEET NUMBER:

E201

12.07.15

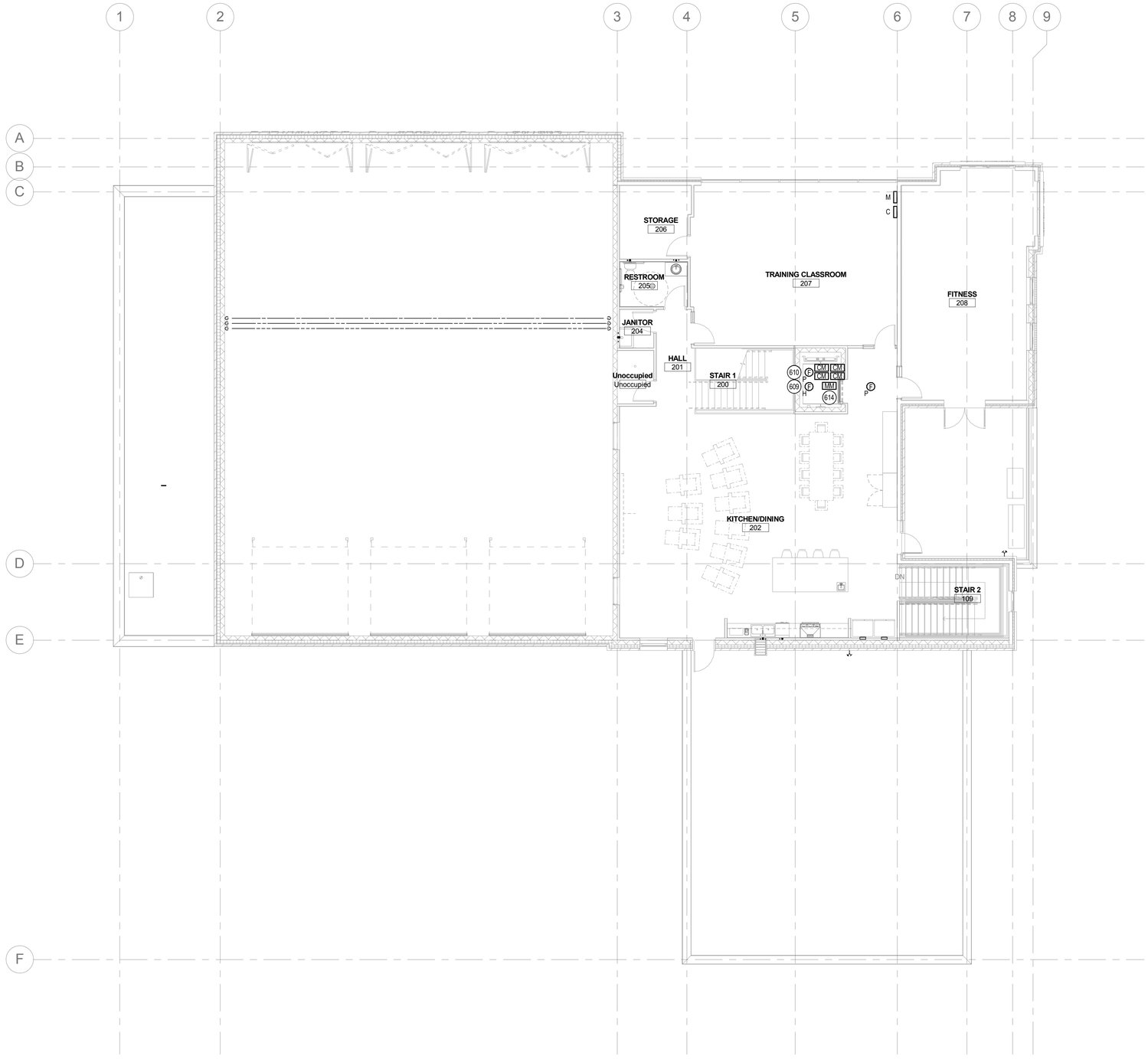

2ND FLOOR FIRE ALARM
1/8" = 1'-0"

NORTH

GENERAL NOTES

A. INSTALL PLENUM RATED FIRE ALARM CONDUCTORS FROM DEVICES INDICATED TO FIRE ALARM CONTROL PANEL OR NAC EXTENDER PANEL(S) AS REQUIRED. STUB 3/4" CONDUIT FROM DEVICE TO VOID ABOVE CEILING. PROVIDE NAC EXTENDER PANELS (QUANTITY AS REQUIRED) IN LOCATIONS INDICATED AND CIRCUITING AS REQUIRED FOR A COMPLETE INSTALLATION. CIRCUIT THE FIRE ALARM NOTIFICATION AND INITIATION DEVICES PER THE ELECTRICAL SPECIFICATIONS. FURNISH AND INSTALL ALL APPURTENANCES AND PROGRAMMING REQUIRED FOR A COMPLETE AND OPERATIONAL SYSTEM. REFER TO ELECTRICAL FIRE ALARM SPECIFICATIONS FOR SYSTEM REQUIREMENTS AND SUBMITTAL PROCEDURES.

B. ALL CONDUIT AND JUNCTION BOXES ARE TO BE CONCEALED IN NEW WALLS, EXISTING FURRED OUT WALLS AND EXISTING ACCESSIBLE CEILINGS. USE OF SURFACE MOUNTED RACEWAYS MUST BE APPROVED BY THE ARCHITECT FOR EACH LOCATION. WHERE APPROVED, UTILIZE WIREMOLD OR APPROVED EQUAL SURFACE MOUNTED RACEWAYS PAINTED TO MATCH SURROUNDING WALLS.

KEYED NOTES

◯ SYMBOL USED FOR NOTE CALLOUT.

609 MOUNT HEAT DETECTOR WITHIN 18" OF SPRINKLER HEAD AT THE TOP OF THE SHAFT.
610 SMOKE DETECTOR MOUNTED AT THE TOP OF THE SHAFT.
614 PROVIDE AND INSTALL MONITOR MODULE FOR SHUNT TRIP VOLTAGE. CONTROL MODULES FOR ACTIVATION OF ELEVATOR SHUNT TRIP, FIRE HAT, PRIMARY RECALL, SECONDARY RECALL AND ALL OTHER RELAYS AND HARDWARE REQUIRED.

ARCHITECT:

COLE ARCHITECTS

COLE ARCHITECTS | 802 W. BANNOCK SUIT 208
Boise, ID 83702 | (208) 345-1800

TCA
architecture • planning

TCA | 6211 Roosevelt Way NE
Seattle, WA 98115 | (208) 522-3820

STAMP:

PRELIMINARY
NOT FOR CONSTRUCTION
01-29-16

CONSULTANT:

MUSGROVE
ENGINEERING, P.A.
234 S. Whisperwood Way
Boise, Idaho 83709
208.384.0585
www.musgrovepa.com
OVER 30 YEARS OF EXCELLENCE
project number: 15-061

PROJECT INFORMATION:

BOISE CITY OF TREES

BOISE FIRE EST. 1878 DEDICATION PROTECTION

City of Boise Fire Station 4

8485 W Ustick Rd, Boise, ID 83704

REVISIONS:

MARK	DATE	DESCRIPTION

PROJECT PHASE	75% CD'S
PROJECT NUMBER	15-27
PROJECT MANAGER	J. Chatfield
PROJECT ARCHITECT	J. Chatfield
DESIGN	J. Chatfield
DRAWN BY	RM/TM

SHEET NAME:

2ND FLOOR FIRE ALARM PLAN

SHEET NUMBER:

E202

12.07.15

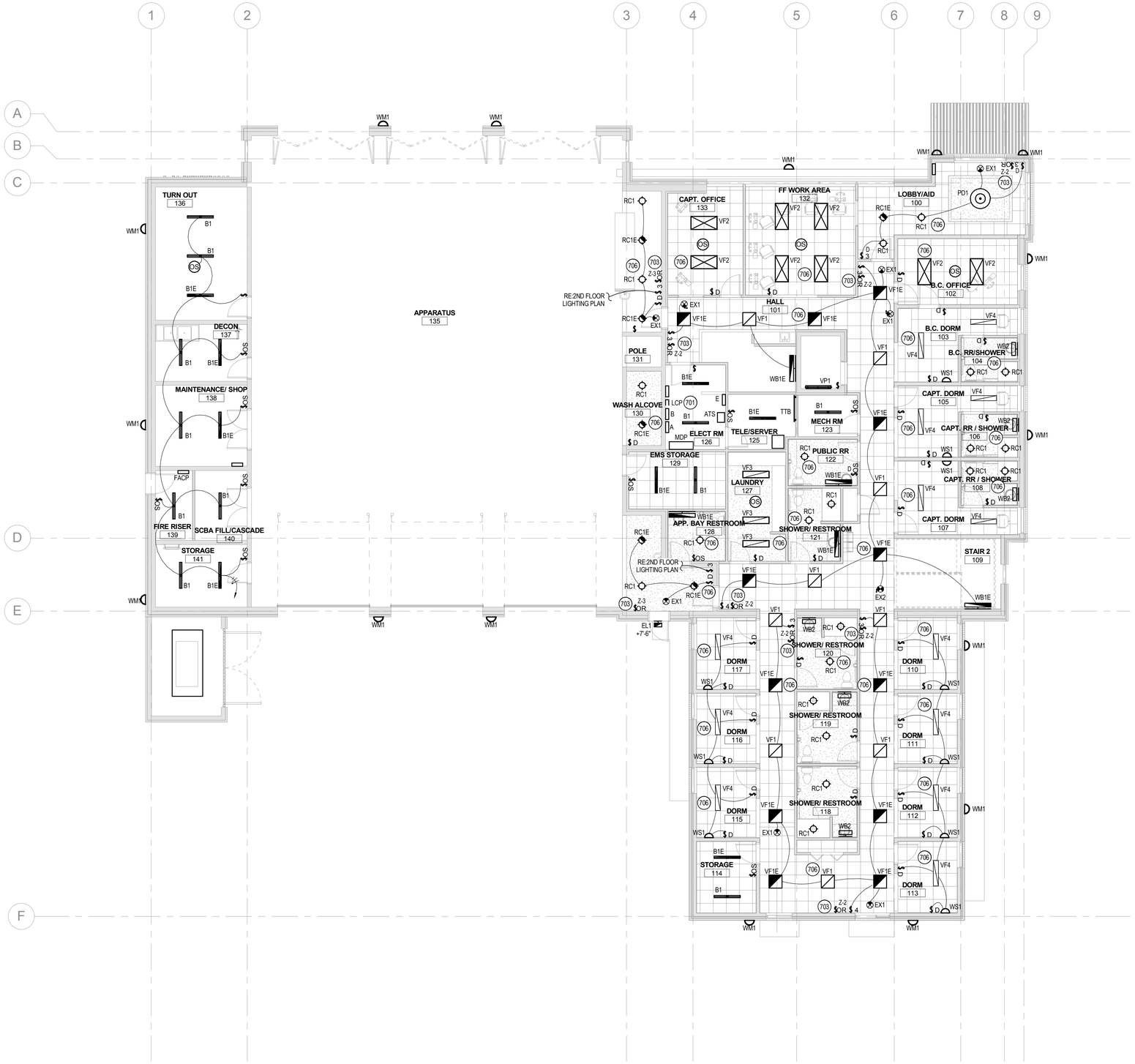

GENERAL NOTES

A. THESE ELECTRICAL DRAWINGS ARE DIAGRAMMATIC IN NATURE: THEREFORE, THE ELECTRICAL CONTRACTOR SHALL COORDINATE ALL ELECTRICAL EQUIPMENT AND DEVICE LOCATIONS WITH ARCHITECTURAL, MECHANICAL, AND PLUMBING CONTRACTORS PRIOR TO ROUGH-IN. REFER TO ADN COORDINATE WITH ARCHITECTURAL, MECHANICAL, AND PLUMBING DRAWINGS FOR ADDITIONAL WORK THAT IS REQUIRED BY THE CONTRACTOR.

B. ALL CONDUIT AND JUNCTION BOXES ARE TO BE CONCEALED IN NEW WALLS, EXISTING FURRED OUT WALLS AND EXISTING ACCESSIBLE CEILINGS. USE OF SURFACE MOUNTED RACEWAYS MUST BE APPROVED BY THE ARCHITECT FOR EACH LOCATION. WHERE APPROVED, UTILIZE WIREMOLD OR APPROVED EQUAL SURFACE MOUNTED RACEWAYS PAINTED TO MATCH SURROUNDING WALLS.

KEYED NOTES

◯ SYMBOL USED FOR NOTE CALLOUT.

701 LIGHTING CONTROL PANEL. RE:LIGHTING CONTROL PANEL DETAIL

703 PROVIDE MOMENTARY LOW-VOLTAGE OVERRIDE SWITCH WITH CABLING BACK TO LIGHTING CONTROL PANEL AS REQUIRED. SWITCH SHALL BE LABELED 'OVERRIDE' AND PROVIDE 2 HOURS OF OPERATION FOR THE LIGHTING DURING NON-BUSINESS HOURS.

706 1/2" CONDUIT WITH 2#12 TO ALARM INTERFACE PANEL. ACTIVATION OF ALARM SHALL ILLUMINATE ALL LIGHTS ON ASSOCIATED CIRCUIT REGARDLESS OF SWITCH POSITIONS OR OCCUPANCY SENSOR. CONNECT TO ONE SWITCHED LEG FOR DUAL LEVEL FIXTURES. RE: ALARM INTERFACE PANEL DETAIL. PROVIDE MACHINE PRINTED CLEAR TAPE LABEL AT BALLAST STATING "FIXTURE PARALLEL FED THROUGH SWITCH AND ALARM INTERFACE PANEL. TURN OFF AT BREAKER FOR MAINTENANCE, FED FROM #-##". WHERE #-## REPRESENTS THE PANEL AND CIRCUIT FEEDING THE FIXTURE.

1ST FLOOR LIGHTING PLAN
1/8" = 1'-0"

NORTH

ARCHITECT:

COLE ARCHITECTS

COLE ARCHITECTS | 802 W. BANNOCK SUIT 208
Boise, ID 83702 | (208) 345-1800

TCA architecture • planning

TCA | 6211 Roosevelt Way NE
Seattle, WA 98115 | (206) 522-3820

STAMP:

PRELIMINARY
NOT FOR CONSTRUCTION
01-29-16

CONSULTANT:

MUSGROVE ENGINEERING, P.A.
234 S. Whisperwood Way
Boise, Idaho 83709
208.384.0585
www.musgrovepa.com
OVER 30 YEARS OF EXCELLENCE
project number: 15-061

PROJECT INFORMATION:

City of Boise Fire Station 4
8485 W Ustick Rd, Boise, ID 83704

REVISIONS:

MARK	DATE	DESCRIPTION

PROJECT PHASE	75% CD'S
PROJECT NUMBER	15-27
PROJECT MANAGER	J. Chatfield
PROJECT ARCHITECT	J. Chatfield
DESIGN	J. Chatfield
DRAWN BY	RM/TM

SHEET NAME:

1ST FLOOR LIGHTING PLAN

SHEET NUMBER:

E203

12.07.15

2ND FLOOR LIGHTING PLAN

1/8" = 1'-0"

NORTH

GENERAL NOTES

A. THESE ELECTRICAL DRAWINGS ARE DIAGRAMMATIC IN NATURE: THEREFORE, THE ELECTRICAL CONTRACTOR SHALL COORDINATE ALL ELECTRICAL EQUIPMENT AND DEVICE LOCATIONS WITH ARCHITECTURAL, MECHANICAL, AND PLUMBING CONTRACTORS PRIOR TO ROUGH-IN. REFER TO ADN COORDINATE WITH ARCHITECTURAL, MECHANICAL, AND PLUMBING DRAWINGS FOR ADDITIONAL WORK THAT IS REQUIRED BY THE CONTRACTOR.

B. ALL CONDUIT AND JUNCTION BOXES ARE TO BE CONCEALED IN NEW WALLS, EXISTING FURRED OUT WALLS AND EXISTING ACCESSIBLE CEILINGS. USE OF SURFACE MOUNTED RACEWAYS MUST BE APPROVED BY THE ARCHITECT FOR EACH LOCATION. WHERE APPROVED, UTILIZE WIREMOLD OR APPROVED EQUAL SURFACE MOUNTED RACEWAYS PAINTED TO MATCH SURROUNDING WALLS.

KEYED NOTES

◯ SYMBOL USED FOR NOTE CALLOUT.

703 PROVIDE MOMENTARY LOW-VOLTAGE OVERRIDE SWITCH WITH CABLING BACK TO LIGHTING CONTROL PANEL AS REQUIRED. SWITCH SHALL BE LABELED 'OVERRIDE' AND PROVIDE 2 HOURS OF OPERATION FOR THE LIGHTING DURING NON-BUSINESS HOURS.

705 CONNECT SUCH THAT EITHER OCCUPANCY SENSOR WILL CONTROL THE LIGHTING IN THIS ROOM.

706 1/2" CONDUIT WITH 2#12 TO ALARM INTERFACE PANEL. ACTIVATION OF ALARM SHALL ILLUMINATE ALL LIGHTS ON ASSOCIATED CIRCUIT REGARDLESS OF SWITCH POSITIONS OR OCCUPANCY SENSOR. CONNECT TO ONE SWITCHED LEG FOR DUAL LEVEL FIXTURES. RE: ALARM INTERFACE PANEL DETAIL. PROVIDE MACHINE PRINTED CLEAR TAPE LABEL AT BALLAST STATING "FIXTURE PARALLEL FED THROUGH SWITCH AND ALARM INTERFACE PANEL. TURN OFF AT BREAKER FOR MAINTENANCE, FED FROM #-##". WHERE #-## REPRESENTS THE PANEL AND CIRCUIT FEEDING THE FIXTURE.

ARCHITECT:

COLE ARCHITECTS

COLE ARCHITECTS | 802 W. BANNOCK SUIT 208
Boise, ID 83702 | (208) 345-1800

TCA architecture • planning

TCA | 6211 Roosevelt Way NE
Seattle, WA 98115 | (208) 522-3820

STAMP:

PRELIMINARY

NOT FOR CONSTRUCTION
01-29-16

CONSULTANT:

MUSGROVE ENGINEERING, P.A.
234 S. Whisperwood Way
Boise, Idaho 83709
208.384.0585
www.musgrovepa.com
OVER 30 YEARS OF EXCELLENCE
project number: 15-061

PROJECT INFORMATION:

BOISE CITY OF TREES

BOISE FIRE EST. 1891 DEDICATION TO PROTECT AND SERVE

City of Boise Fire Station 4

8485 W Ustick Rd, Boise, ID 83704

REVISIONS:

MARK	DATE	DESCRIPTION

PROJECT PHASE	75% CD'S
PROJECT NUMBER	15-27
PROJECT MANAGER	J. Chatfield
PROJECT ARCHITECT	J. Chatfield
DESIGN	J. Chatfield
DRAWN BY	RM/TM

SHEET NAME:

2ND FLOOR LIGHTING PLAN

SHEET NUMBER:

E204

12.07.15

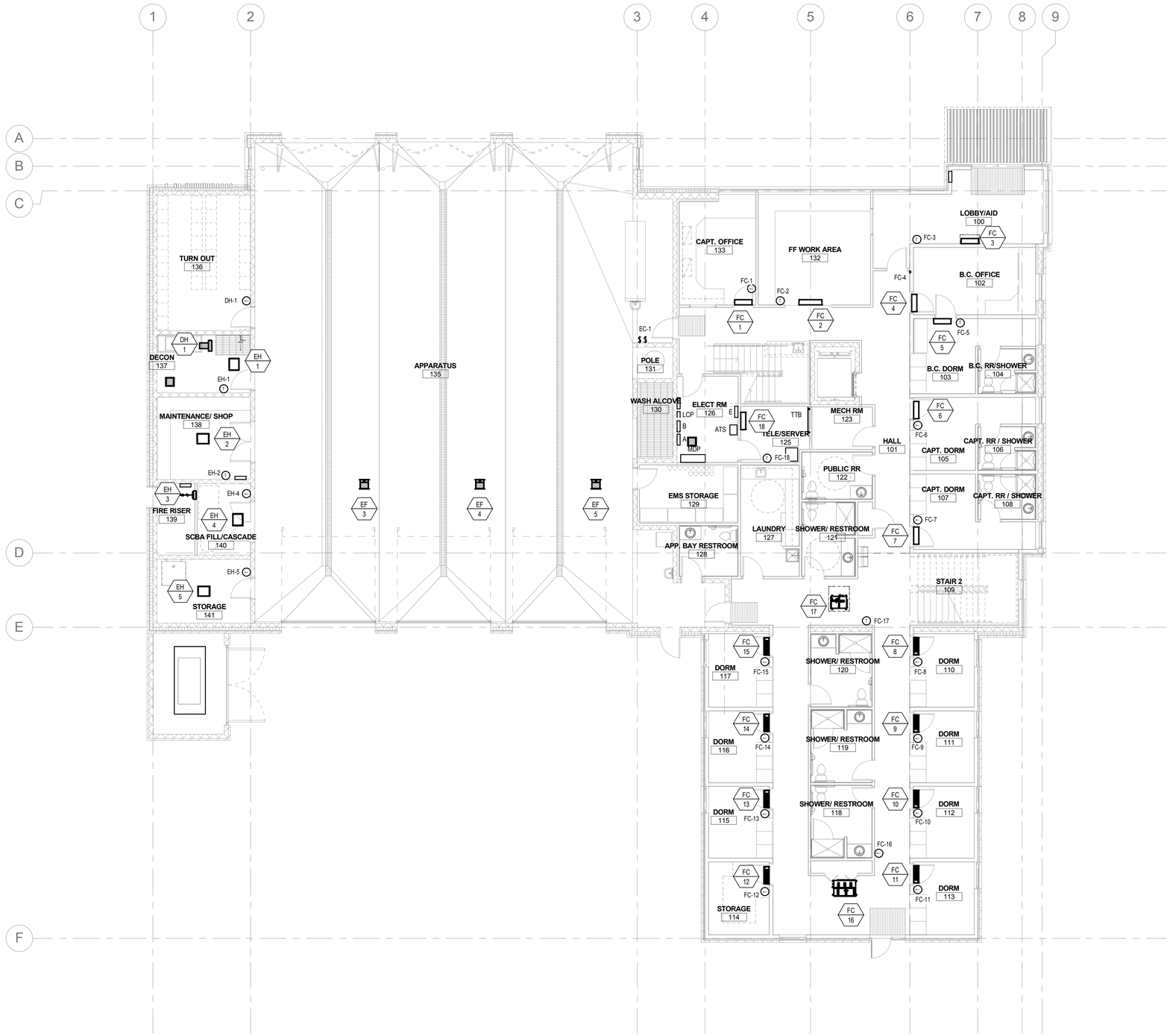

1ST FLOOR MECHANICAL POWER PLAN
1/8" = 1'-0"

NORTH

GENERAL NOTES

A. THESE ELECTRICAL DRAWINGS ARE DIAGRAMMATIC IN NATURE: THEREFORE, THE ELECTRICAL CONTRACTOR SHALL COORDINATE ALL ELECTRICAL EQUIPMENT AND DEVICE LOCATIONS WITH ARCHITECTURAL, MECHANICAL, AND PLUMBING CONTRACTORS PRIOR TO ROUGH-IN. REFER TO ADN COORDINATE WITH ARCHITECTURAL, MECHANICAL, AND PLUMBING DRAWINGS FOR ADDITIONAL WORK THAT IS REQUIRED BY THE CONTRACTOR.

B. ALL CONDUIT AND JUNCTION BOXES ARE TO BE CONCEALED IN NEW WALLS, EXISTING FURRED OUT WALLS AND EXISTING ACCESSIBLE CEILINGS. USE OF SURFACE MOUNTED RACEWAYS MUST BE APPROVED BY THE ARCHITECT FOR EACH LOCATION. WHERE APPROVED, UTILIZE WIREMOLD OR APPROVED EQUAL SURFACE MOUNTED RACEWAYS PAINTED TO MATCH SURROUNDING WALLS.

C. MECHANICAL EQUIPMENT SHOWN IN APPROXIMATE LOCATION. COORDINATE WITH MECHANICAL CONTRACTOR.

KEYED NOTES

◯ SYMBOL USED FOR NOTE CALLOUT.

ARCHITECT:

COLE ARCHITECTS

COLE ARCHITECTS | 802 W. BANNOCK SUIT 208
Boise, ID 83702 | (208) 345-1800

TCA architecture • planning

TCA | 6211 Roosevelt Way NE
Seattle, WA 98115 | (206) 522-3820

STAMP:

PRELIMINARY
NOT FOR CONSTRUCTION
01-29-16

CONSULTANT:

MUSGROVE ENGINEERING, P.A.
234 S. Whisperwood Way
Boise, Idaho 83709
208.384.0585
www.musgrovepa.com
OVER 30 YEARS OF EXCELLENCE
project number: 15-061

PROJECT INFORMATION:

City of Boise Fire Station 4
8485 W Ustick Rd, Boise, ID 83704

REVISIONS:

MARK	DATE	DESCRIPTION

PROJECT PHASE	75% CD'S
PROJECT NUMBER	15-27
PROJECT MANAGER	J. Chatfield
PROJECT ARCHITECT	J. Chatfield
DESIGN	J. Chatfield
DRAWN BY	RM/TM

SHEET NAME:

1ST FLOOR MECHANICAL POWER PLAN

SHEET NUMBER:

E205

12.07.15

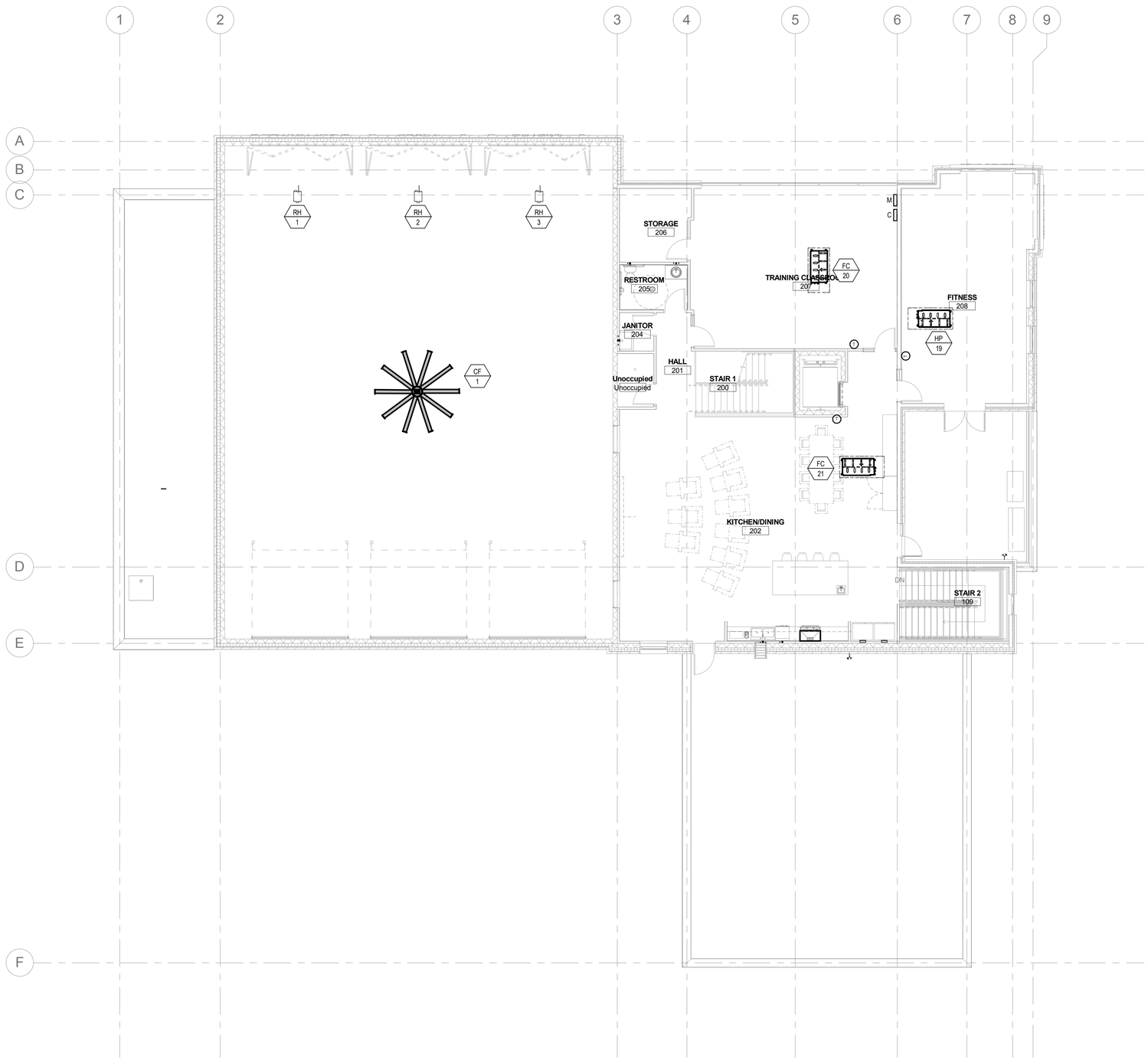

2ND FLOOR MECHANICAL POWER PLAN
1/8" = 1'-0"

NORTH

GENERAL NOTES

A. THESE ELECTRICAL DRAWINGS ARE DIAGRAMMATIC IN NATURE: THEREFORE, THE ELECTRICAL CONTRACTOR SHALL COORDINATE ALL ELECTRICAL EQUIPMENT AND DEVICE LOCATIONS WITH ARCHITECTURAL, MECHANICAL, AND PLUMBING CONTRACTORS PRIOR TO ROUGH-IN. REFER TO ADN COORDINATE WITH ARCHITECTURAL, MECHANICAL, AND PLUMBING DRAWINGS FOR ADDITIONAL WORK THAT IS REQUIRED BY THE CONTRACTOR.

B. ALL CONDUIT AND JUNCTION BOXES ARE TO BE CONCEALED IN NEW WALLS, EXISTING FURRED OUT WALLS AND EXISTING ACCESSIBLE CEILINGS. USE OF SURFACE MOUNTED RACEWAYS MUST BE APPROVED BY THE ARCHITECT FOR EACH LOCATION. WHERE APPROVED, UTILIZE WIREMOLD OR APPROVED EQUAL SURFACE MOUNTED RACEWAYS PAINTED TO MATCH SURROUNDING WALLS.

C. MECHANICAL EQUIPMENT SHOWN IN APPROXIMATE LOCATION. COORDINATE WITH MECHANICAL CONTRACTOR.

KEYED NOTES

◯ SYMBOL USED FOR NOTE CALLOUT.

ARCHITECT:

COLE ARCHITECTS

COLE ARCHITECTS | 802 W. BANNOCK SUIT 208
Boise, ID 83702 | (208) 345-1800

TCA
architecture • planning

TCA | 6211 Roosevelt Way NE
Seattle, WA 98115 | (206) 522-3820

STAMP:

PRELIMINARY
NOT FOR CONSTRUCTION
01-29-16

CONSULTANT:

MUSGROVE ENGINEERING, P.A.
234 S. Whisperwood Way
Boise, Idaho 83709
208.384.0585
www.musgrovepa.com
OVER 30 YEARS OF EXCELLENCE
project number: 15-061

PROJECT INFORMATION:

BOISE CITY OF TREES

BOISE FIRE Est. 1873 DEDICATION

City of Boise Fire Station 4

8485 W Ustick Rd, Boise, ID 83704

REVISIONS:

MARK	DATE	DESCRIPTION

PROJECT PHASE	75% CD'S
PROJECT NUMBER	15-27
PROJECT MANAGER	J. Chatfield
PROJECT ARCHITECT	J. Chatfield
DESIGN	J. Chatfield
DRAWN BY	RM/TM

SHEET NAME:

2ND FLOOR MECHANICAL POWER PLAN

SHEET NUMBER:

E206

12.07.15

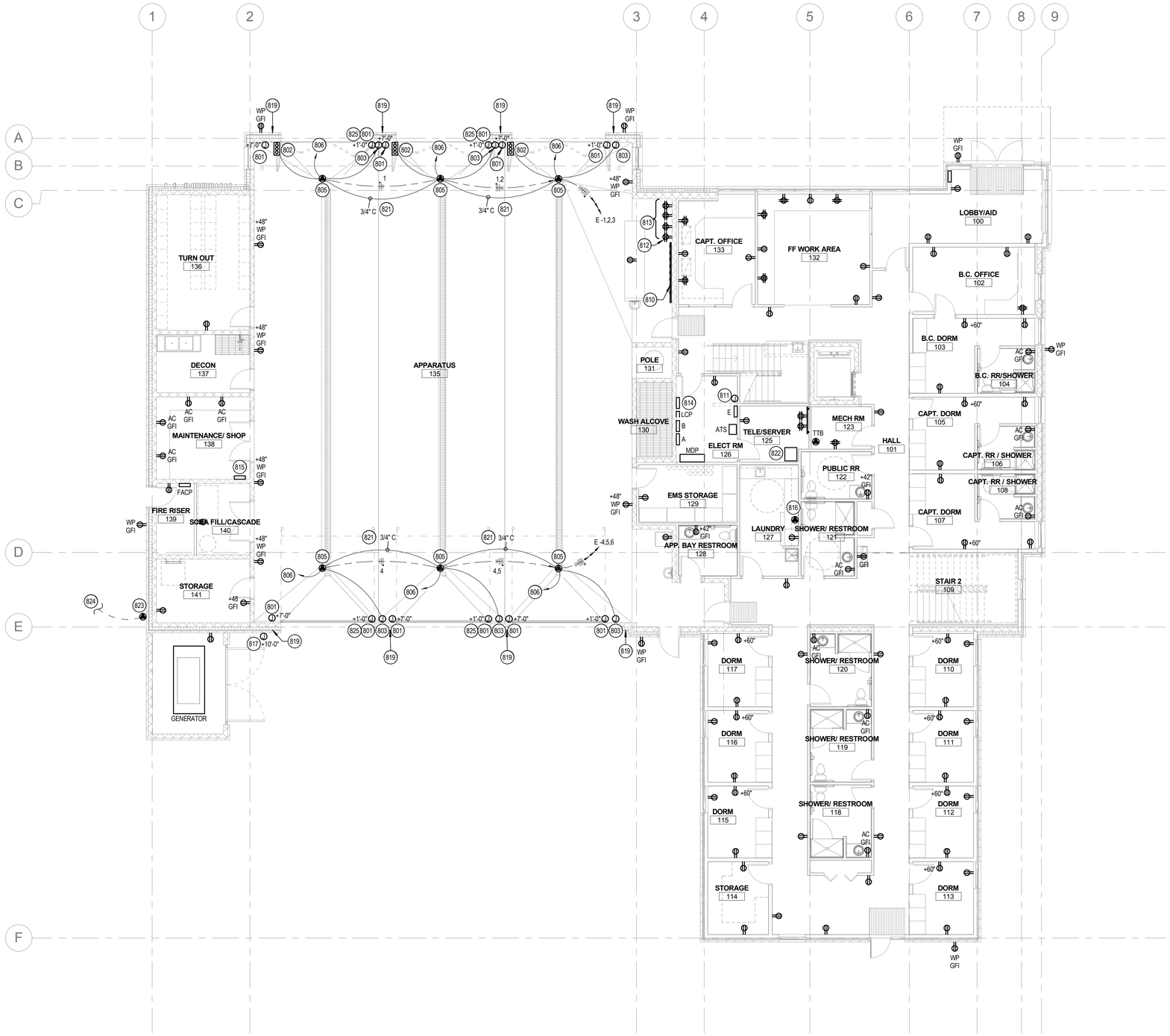

1ST FLOOR POWER PLAN
1/8" = 1'-0"

NORTH

GENERAL NOTES

A. THESE ELECTRICAL DRAWINGS ARE DIAGRAMMATIC IN NATURE: THEREFORE, THE ELECTRICAL CONTRACTOR SHALL COORDINATE ALL ELECTRICAL EQUIPMENT AND DEVICE LOCATIONS WITH ARCHITECTURAL, MECHANICAL, AND PLUMBING CONTRACTORS PRIOR TO ROUGH-IN. REFER TO ADN COORDINATE WITH ARCHITECTURAL, MECHANICAL, AND PLUMBING DRAWINGS FOR ADDITIONAL WORK THAT IS REQUIRED BY THE CONTRACTOR.

B. ALL CONDUIT AND JUNCTION BOXES ARE TO BE CONCEALED IN NEW WALLS, EXISTING FURRED OUT WALLS AND EXISTING ACCESSIBLE CEILINGS. USE OF SURFACE MOUNTED RACEWAYS MUST BE APPROVED BY THE ARCHITECT FOR EACH LOCATION. WHERE APPROVED, UTILIZE WIREMOLD OR APPROVED EQUAL SURFACE MOUNTED RACEWAYS PAINTED TO MATCH SURROUNDING WALLS.

C. REFER TO ARCHITECTURAL ELEVATIONS FOR OUTLET HEIGHTS WHERE THE SPECIFIC OUTLET HEIGHT IS NOT INDICATED ON THIS SHEET. REFER TO THE ELECTRICAL LEGEND FOR THE DEFAULT OUTLET HEIGHT WHEN NOT INDICATED ON ELEVATIONS OR ON THIS SHEET.

KEYED NOTES

SYMBOL USED FOR NOTE CALLOUT.

801 PROVIDE JUNCTION BOX AT HEIGHT INDICATED WITH COVER AND 1/2" CONDUIT TO DOOR CONTROL JUNCTION BOX IN CEILING FOR DOOR SENSOR. COORDINATE WITH DOOR INSTALLER.

802 GO/NO-GO LIGHT MOUNTED ON WALL WITH 1/2" CONDUIT TO DOOR CONTROL JUNCTION BOX IN CEILING. COORDINATE WITH DOOR INSTALLER. RE:ARCHITECTS DOOR SCHEDULES

803 JUNCTION BOX ON WALL WITH 1/2" CONDUIT TO DOOR CONTROL JUNCTION BOX IN CEILING FOR MANUAL DOOR CONTROL. COORDINATE WITH DOOR INSTALLER. RE: ARCHITECTS DOOR SCHEDULES.

805 CONNECTION FOR OVERHEAD DOOR OPERATOR. PROVIDE TWO SEPARATE JUNCTION BOXES IN THE CEILING. ONE JUNCTION BOX FOR POWER AND ONE JUNCTION BOX FOR CONTROL. COORDINATE REQUIREMENTS WITH EQUIPMENT SUPPLIER PRIOR TO ROUGH-IN.

806 3/4" CONDUIT FROM CONTROL JUNCTION BOX TO EXHAUST SYSTEM. JUNCTION BOX MOUNTED ON THE RAIL FOR THIS BAY.

810 PROVIDE V2400 GBA SERIES WIREMOLD WITH OUTLETS AT 12" ON CENTER. PROVIDE SPLIT CIRCUITING FOR EACH DUPLEX. RE: ARCHITECTS ELEVATIONS.

811 SURFACE MOUNTED 6"X6"X4" JUNCTION BOX WITH RELAY #KH1BU-DC12 AND BASE #SH1B-05. PROVIDE 1/2" CONDUIT AND 2#14 TO RADIO CABINET. RE:RADIO CABINET DETAIL

812 RADIO CABINET. RE:RADIO CABINET DETAIL

813 OUTLETS LOCATED INSIDE RADIO CABINET. RE:RADIO CABINET DETAIL

814 ALARM INTERFACE PANEL. 3/4" CONDUIT WITH 4#12 TO RADIO CABINET. RE:RADIO CABINET DETAIL

815 GENERATOR ANNUNCIATOR PANEL. RE:ONE-LINE DIAGRAM

816 CONNECTION FOR DRYER. COORDINATE REQUIREMENTS WITH EQUIPMENT SUPPLIER PRIOR TO ROUGH-IN.

817 JUNCTION BOX AT +10'-0" AFG FOR OWNER INSTALLED SENSOR. COORDINATE LOCATION WITH OWNER AND ARCHITECTURAL ELEVATIONS PRIOR TO ROUGH-IN. PROVIDE 3/4" CONDUIT TO DOOR #123E CONTROL JUNCTION BOX. RE:ARCHITECTS DOOR SCHEDULES

819 VERTICAL CONDUITS AND RACEWAYS ARE NOT ALLOWED TO BE INSIDE THE STRUCTURE IN THIS AREA. ROUTE CONDUITS AND RACEEWAYS ON THE SURFACE OF THE INSIDE OF THE AREA. COORDINATE WITH STRUCTURAL DRAWINGS.

821 CONDUIT AS INDICATED BETWEEN CONTROL. JUNCTION BOXES FOR CONTROLS AND FUTURE USE.

822 CONNECTION FOR OWNER PROVIDED UPS.

823 CONNECTION FOR IRRIGATION CONTROLLER. COORDINATE LOCATION AND REQUIREMENTS WITH IRRIGATION CONTRACTOR.

824 STUB 1 1/2" CONDUIT FROM IRRIGATION CONTROLLER TO LANDSCAPE AREA FOR SPRINKLER WIRING. COORRDINATE LOCATION WITH OWNER AND IRRIGATION CONTRACTOR. MARK LOCATION WITH MONUMENT MARKER. PROVIDE PULL-LINE WITH CONDUIT.

825 PROVIDE AND INSTALL 1/2" CONDUIT FROM BOTTOM EDGE OF DOOR TO BELOW THE CEILING IN SERVER ROOM FOR OWNER PROVIDED/INSTALLED SECURITY SENSORS.

ARCHITECT:

COLE ARCHITECTS

COLE ARCHITECTS | 802 W. BANNOCK SUIT 208
Boise, ID 83702 | (208) 345-1800

TCA architecture • planning

TCA | 6211 Roosevelt Way NE
Seattle, WA 98115 | (206) 522-3820

STAMP:

PRELIMINARY
NOT FOR CONSTRUCTION
01-29-16

CONSULTANT:

MUSGROVE ENGINEERING, P.A.
234 S. Whisperwood Way
Boise, Idaho 83709
208.384.0585
www.musgrovepa.com
OVER 30 YEARS OF EXCELLENCE
project number: 15-061

PROJECT INFORMATION:

City of Boise Fire Station 4
8485 W Ustick Rd, Boise, ID 83704

REVISIONS:

MARK	DATE	DESCRIPTION

PROJECT PHASE	75% CD'S
PROJECT NUMBER	15-27
PROJECT MANAGER	J. Chatfield
PROJECT ARCHITECT	J. Chatfield
DESIGN	J. Chatfield
DRAWN BY	RM/TM

SHEET NAME:

1ST FLOOR POWER PLAN

SHEET NUMBER:

E207

12.07.15

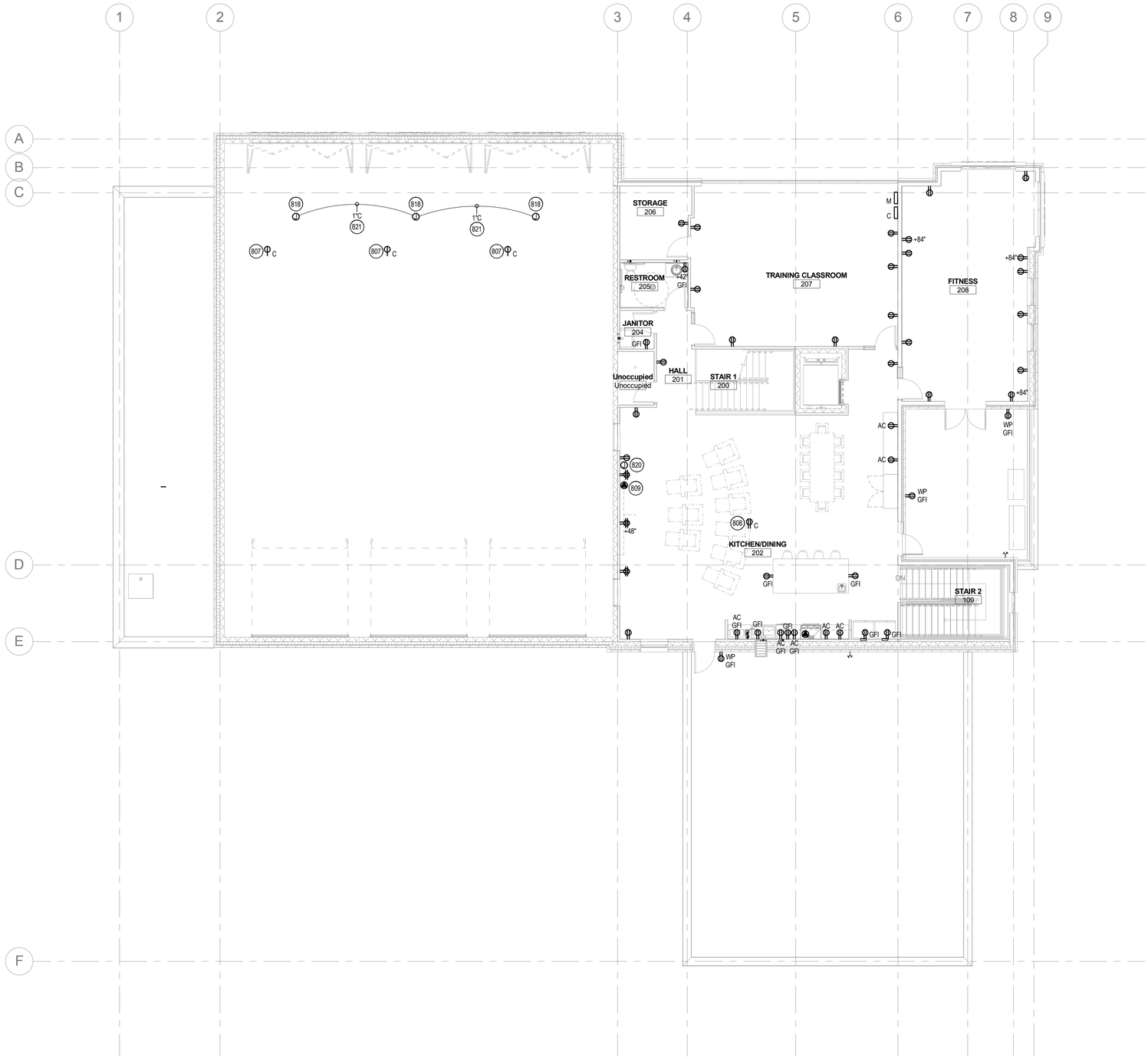

GENERAL NOTES

A. THESE ELECTRICAL DRAWINGS ARE DIAGRAMMATIC IN NATURE: THEREFORE, THE ELECTRICAL CONTRACTOR SHALL COORDINATE ALL ELECTRICAL EQUIPMENT AND DEVICE LOCATIONS WITH ARCHITECTURAL, MECHANICAL, AND PLUMBING CONTRACTORS PRIOR TO ROUGH-IN. REFER TO ADN COORDINATE WITH ARCHITECTURAL, MECHANICAL, AND PLUMBING DRAWINGS FOR ADDITIONAL WORK THAT IS REQUIRED BY THE CONTRACTOR.

B. ALL CONDUIT AND JUNCTION BOXES ARE TO BE CONCEALED IN NEW WALLS, EXISTING FURRED OUT WALLS AND EXISTING ACCESSIBLE CEILINGS. USE OF SURFACE MOUNTED RACEWAYS MUST BE APPROVED BY THE ARCHITECT FOR EACH LOCATION. WHERE APPROVED, UTILIZE WIREMOLD OR APPROVED EQUAL SURFACE MOUNTED RACEWAYS PAINTED TO MATCH SURROUNDING WALLS.

C. REFER TO ARCHITECTURAL ELEVATIONS FOR OUTLET HEIGHTS WHERE THE SPECIFIC OUTLET HEIGHT IS NOT INDICATED ON THIS SHEET. REFER TO THE ELECTRICAL LEGEND FOR THE DEFAULT OUTLET HEIGHT WHEN NOT INDICATED ON ELEVATIONS OR ON THIS SHEET.

KEYED NOTES

◯ SYMBOL USED FOR NOTE CALLOUT.

807 CEILING MOUNTED RECEPTACLE FOR OWNER PROVIDED TRUCK POWER CONNECTION.

808 RECEPTACLE FOR CEILING MOUNTED PROJECTOR.

809 CONNECTION FOR MOTORIZED SCREEN. COORDINATE CONTROL AND CONNECTION REQUIREMENTS WITH EQUIPMENT SUPPLIER PRIOR TO ROUGH-IN.

818 OWNER PROVIDED JUNCTION BOX FOR CONTROLS INTERFACE OF THE EXHAUST SYSTEM TO BE INSTALLED BY THE CONTRACTOR ON THE UNI-STRUT FRAME. REFER TO ARCHITECTS PLANS FOR LOCATION AND ADDITIONAL INFORMATION. CONTRACTOR SHALL PROVIDE A JUNCTION BOX AT THE CEILING TO ROUTE ALL CIRCUITS THROUGH. ONE CIRCUIT TO BE LEFT IN THE CEILING JUNCTION BOX AND TWO CIRCUITS TO BE EXTENED TO THE OWNER PROVIDED JUNCTION BOX. PROVIDE A 36" SERVICE LOOP IN THE CORRESPONDING JUNCTION BOX. COORDINATE WITH THE ARCHITECTURAL PLANS AND THE OWNER.

820 JUNCTION BOX AT SWITCH HEIGHT FOR MOTORIZED SCREEN CONTROL. COORDINATE WITH EQUIPMENT SUPPLIER PRIOR TO ROUGH-IN.

821 CONDUIT AS INDICATED BETWEEN CONTROL. JUNCTION BOXES FOR CONTROLS AND FUTURE USE.

2ND FLOOR POWER PLAN
1/8" = 1'-0"

NORTH

ARCHITECT:

COLE ARCHITECTS

COLE ARCHITECTS | 802 W. BANNOCK SUIT 208
Boise, ID 83702 | (208) 345-1800

TCA
architecture • planning

TCA | 6211 Roosevelt Way NE
Seattle, WA 98115 | (208) 522-3820

STAMP:

PRELIMINARY
NOT FOR CONSTRUCTION
01-29-16

CONSULTANT:

MUSGROVE ENGINEERING, P.A.
234 S. Whisperwood Way
Boise, Idaho 83709
208.384.0585
www.musgrovepa.com
OVER 30 YEARS OF EXCELLENCE
project number: 15-061

PROJECT INFORMATION:

BOISE CITY OF TREES

BOISE FIRE EST. 1891 DEDICATION

City of Boise Fire Station 4

8485 W Ustick Rd, Boise, ID 83704

REVISIONS:

MARK	DATE	DESCRIPTION

PROJECT PHASE	75% CD'S
PROJECT NUMBER	15-27
PROJECT MANAGER	J. Chatfield
PROJECT ARCHITECT	J. Chatfield
DESIGN	J. Chatfield
DRAWN BY	RM/TM

SHEET NAME:

2ND FLOOR POWER PLAN

SHEET NUMBER:

E208

12.07.15

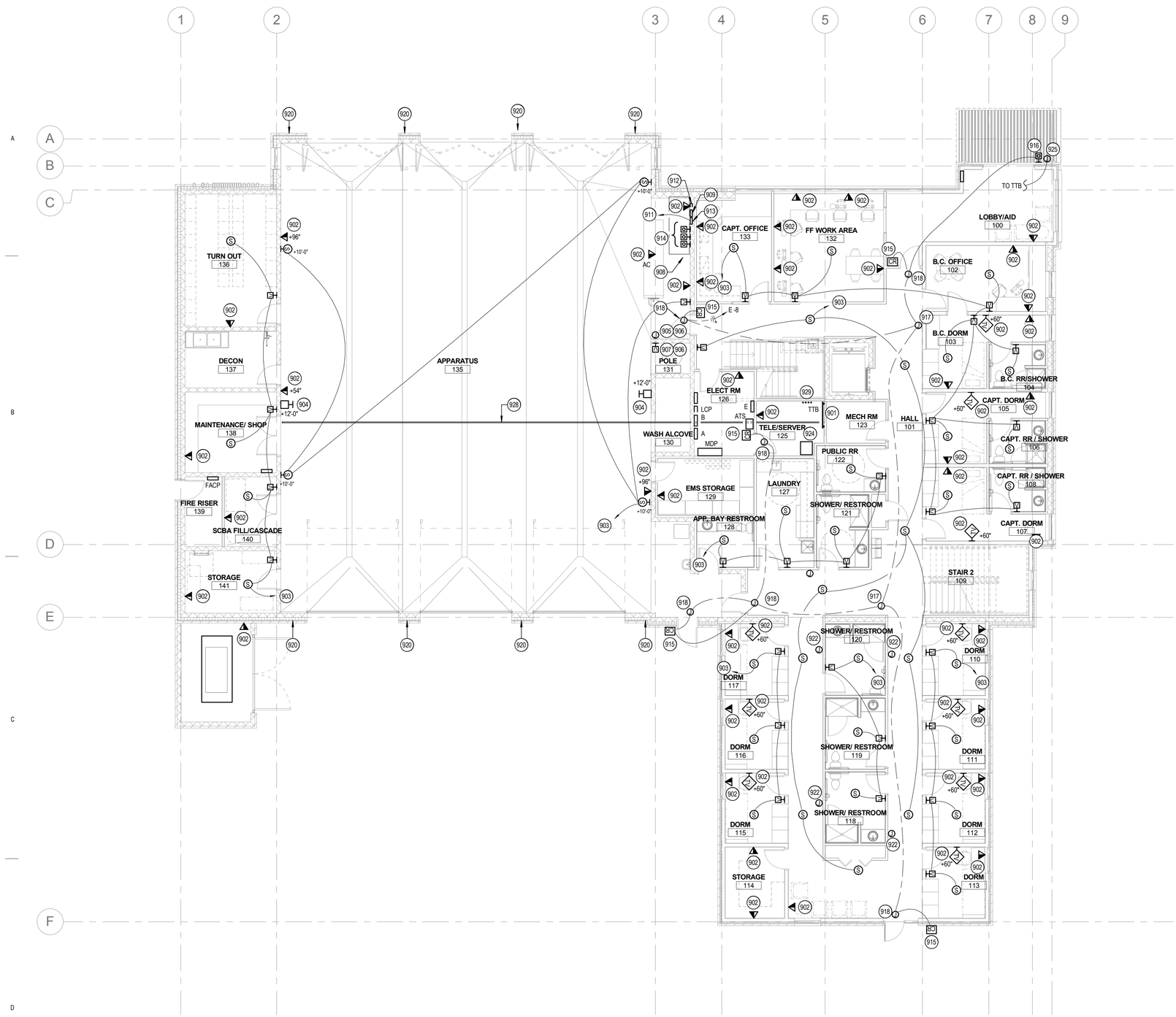

1ST FLOOR SPECIAL SYSTEMS PLAN
1/8" = 1'-0"

NORTH

GENERAL NOTES

A. INSTALL PULL-LINE IN ALL EMPTY CONDUITS FOR FUTURE CABLE PULL.

B. ALL CONDUIT AND JUNCTION BOXES ARE TO BE CONCEALED IN NEW WALLS, EXISTING FURRED OUT WALLS AND EXISTING ACCESSIBLE CEILINGS. USE OF SURFACE MOUNTED RACEWAYS MUST BE APPROVED BY THE ARCHITECT FOR EACH LOCATION. WHERE APPROVED, UTILIZE WIREMOLD OR APPROVED EQUAL SURFACE MOUNTED RACEWAYS PAINTED TO MATCH SURROUNDING WALLS.

C. REFER TO ARCHITECTURAL ELEVATIONS FOR OUTLET HEIGHTS WHERE THE SPECIFIC OUTLET HEIGHT IS NOT INDICATED ON THIS SHEET. REFER TO THE ELECTRICAL LEGEND FOR THE DEFAULT OUTLET HEIGHT WHEN NOT INDICATED ON ELEVATIONS OR ON THIS SHEET.

D. TERMINATE ALL CONDUITS WITH INSULATED THROAT BUSHING.

KEYED NOTES

SYMBOL USED FOR NOTE CALLOUT.

901 TELEPHONE TERMINAL BOARD. RE:EXXX. PROVIDE 2 DEDICATED PHONE LINES TO FACP.
902 STUB 3/4" CONDUIT ABOVE ACCESSIBLE CEILING. TERMINATE WITH INSULATED THROAT BUSHING.
903 3/4" CONDUIT AND CABLING AS REQUIRED TO PUBLIC ADDRESS SYSTEM INTERFACE JUNCTION BOX. RE:RADIO CABINET DETAIL
904 OWNER FURNISHED, CONTRACTOR INSTALLED 120V CHIME. PROVIDE JUNCTION BOX MOUNTED 18" BELOW CEILING, UNO WITH 1/2" CONDUIT AND CONDUCTORS AS REQUIRED TO ALARM INTERFACE PANEL. RE:ALARM INTERFACE PANEL DETAIL. CONTRACTOR TO MAKE ALL CONNECTIONS. COORDINATE INSTALLATION WITH THE OWNER.
905 JUNCTION BOX FOR TRAFFIC SIGNAL CONTROL. RE:ELECTRICAL SITE PLAN FOR JUNCTION BOX REQUIREMENTS AND ALARM INTERFACE PANEL DETAIL FOR WIRING DIAGRAM.
906 3/4" CONDUIT TO RADIO CABINET FOR CONNECTION OF TRAFFIC SIGNAL CONTROL. COORDINATE WITH TRAFFIC SIGNAL CONTRACTOR. RE:RADIO CABINET DETAIL.
907 PROVIDE RED, 22MM, MOMENTARY PUSH BUTTON AND A GREEN, 16MM, MOMENTARY PUSH BUTTON IN A SINGLE GANG PLATE MOUNTED AT SWITCH HEIGHT. THE RED BUTTON SHALL BE LABELED AS "TRAFFIC SIGNAL" AND THE GREEN BUTTON SHALL BE LABELED AS "TRAFFIC SIGNAL RESET". LOCATE THE GREEN BUTTON ON TOP. PROVIDE CABLING AS REQUIRED TO CONNECT EACH PUSH BUTTON TO THE TRAFFIC SIGNAL CONTROL BOX LOCATED IN THE SITE. COORDINATE WITH CIVIL/SIGNAL PLANS FOR LOCATION OF TRAFFIC SIGNAL CONTROL AND CONNECTION REQUIREMENTS.
908 RADIO CABINET. COORDINATE EXACT LOCATION WITH OWNER PRIOR TO ROUGH-IN. RE:RADIO CABINET DETAIL.
909 12"X12"X4" DEEP FLUSH MOUNTED JUNCTION BOX. RE:RADIO CABINET DETAIL.
911 2" CONDUIT STUBBED 12" AFF AT 'TTB'. RE:TELEPHONE TERMINAL BOARD DETAIL, GROUNDING BAR DETAIL, RADIO CABINET DETAIL, & ALARM INTERFACE PANEL.
912 10"X10"X4" DEEP FLUSH MOUNTED JUNCTION BOX FOR PUBLIC ADDRESS SYSTEM INTERFACE. RE:RADIO CABINET DETAIL.
913 12"X12"X4" DEEP ALARM INTERFACE JUNCTION BOX FOR ALARM SYSTEM INTERFACE. RE:RADIO CABINET DETAIL.
914 MOMENTARY PUSH BUTTONS MOUNTED ON WALL AT SWITCH HEIGHT. RE:RADIO CABINET DETAIL.
915 JUNCTION BOX AND 1/2" CONDUIT(S) FOR OWNER PROVIDED CARD READER. PROVIDE AND INSTALL 1/2" CONDUIT(S) FROM DOOR MULLION TO THE JUNCTION BOX(S) AS SHOWN ON PLAN FOR OWNER PROVIDED SECURITY SYSTEM. RE:SINGLE DOOR CARD ACCESS DETAIL.
916 FLUSH MOUNTED JUNCTION BOX WITH 1/2" CONDUIT AND 2#14 TO RADIO CABINET FOR DOOR BELL CONNECTION. CONTRACTOR TO PROVIDE RECESSED, LOW-PROFILE, MOMENTARY PUSH BUTTON AND CONNECT TO THE PA SYSTEM, UTILIZE LAMB INDUSTRIES PV3 SERIES OR EQUAL PUSH BUTTON.
917 PROVIDE JUNCTION BOX LOCATED ABOVE ACCESSIBLE CEILING FOR OWNER PROVIDED SECURITY SYSTEM.
918 JUNCTION BOX LOCATED ABOVE ACCESSIBLE CEILING OR FLUSH MOUNTED 24" ABOVE TOP OF DOOR WITH 1/2" CONDUIT TO DOOR MULLION AND 1/2" CONDUIT TO CARD READER JUNCTION BOX FOR OWNER PROVIDED SECURITY SYSTEM. RE:SINGLE DOOR CARD ACCESS DETAIL.
920 VERTICAL CONDUITS AND RACEWAYS ARE NOT ALLOWED TO BE INSIDE THE STRUCTURE IN THIS AREA. ROUTE CONDUITS AND RACEWAYS ON THE SURFACE ON THE INSIDE OF THE AREA. COORDINATE WITH STRUCTURAL DRAWINGS.
922 CABLES TO BE LEFT COILED ABOVE CEILING FOR FUTURE USE.
924 APPROXIMATE LOCATION OF OWNER PROVIDED AND INSTALLED DATA RACK. FIELD VERIFY LOCATION.
925 FLUSH MOUNTED EMERGENCY PHONE. PROVIDE 3/4" CONDUIT WITH (1)CATSE CABLE TO 'TTB'.
928 2" CONDUIT AT BOTTOM OF STRUCTURE FROM TELE/SERVER TO OTHER SIDE OF APPARATUS.
929 (4)2" CONDUIT CHASES FROM 1ST FLOOR CEILING TO 2ND FLOOR CEILING SPACE.

ARCHITECT:

COLE ARCHITECTS

COLE ARCHITECTS | 802 W. BANNOCK SUIT 208
Boise, ID 83702 | (208) 345-1800

TCA architecture • planning

TCA | 6211 Roosevelt Way NE
Seattle, WA 98115 | (206) 522-3820

STAMP:

PRELIMINARY
NOT FOR CONSTRUCTION
01-29-16

CONSULTANT:

MUSGROVE ENGINEERING, P.A.
234 S. Whisperwood Way
Boise, Idaho 83709
208.384.0585
www.musgrovepa.com
OVER 30 YEARS OF EXCELLENCE
project number: 15-061

PROJECT INFORMATION:

City of Boise Fire Station 4

8485 W Ustick Rd, Boise, ID 83704

REVISIONS:

MARK	DATE	DESCRIPTION

PROJECT PHASE	75% CD'S
PROJECT NUMBER	15-27
PROJECT MANAGER	J. Chatfield
PROJECT ARCHITECT	J. Chatfield
DESIGN	J. Chatfield
DRAWN BY	RM/TM

SHEET NAME:

1ST FLOOR SPECIAL SYSTEMS PLAN

SHEET NUMBER:

E209

12.07.15

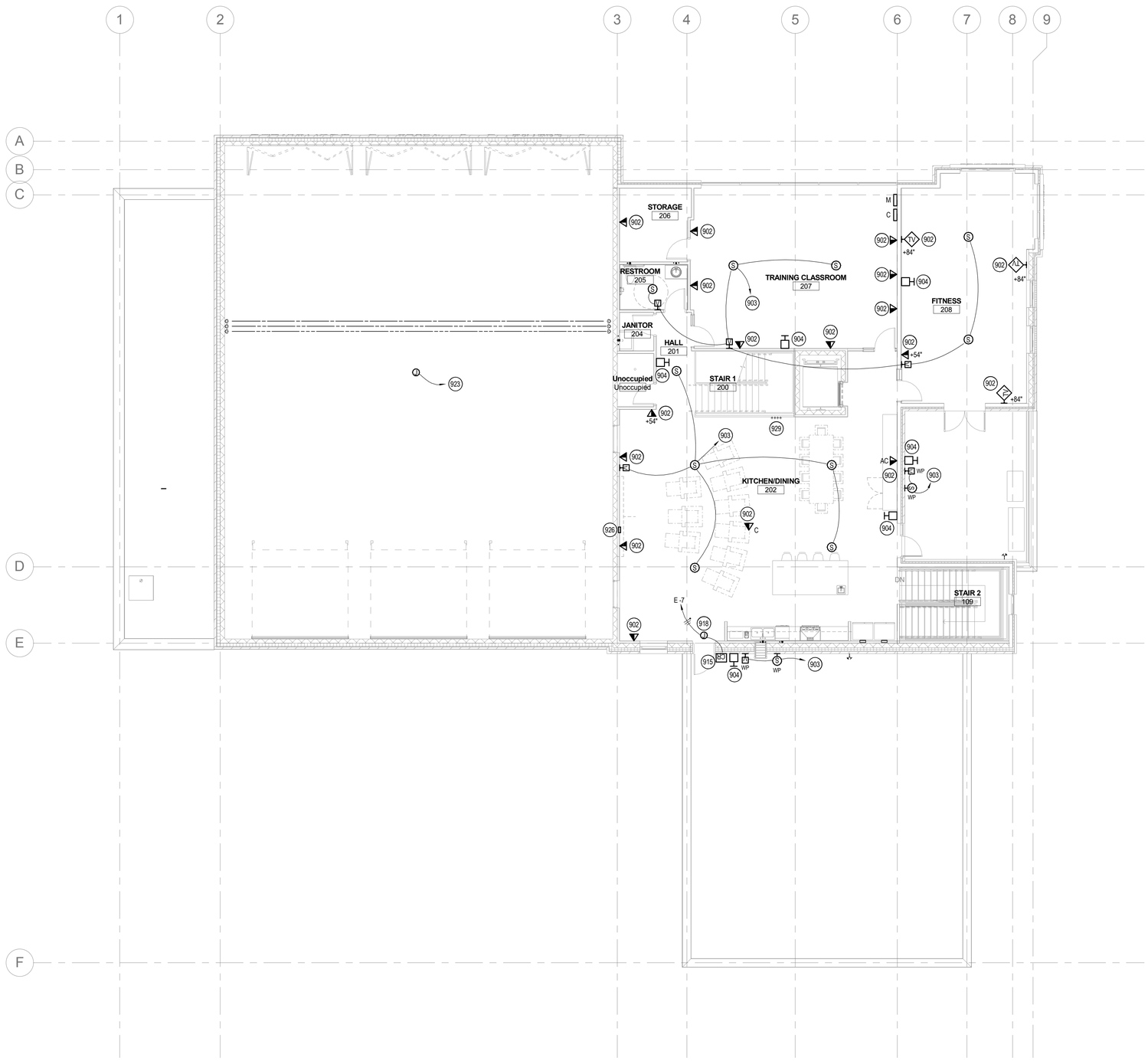

2ND FLOOR SPECIAL SYSTEMS PLAN

1/8" = 1'-0"

NORTH

GENERAL NOTES

A. INSTALL PULL-LINE IN ALL EMPTY CONDUITS FOR FUTURE CABLE PULL.

B. ALL CONDUIT AND JUNCTION BOXES ARE TO BE CONCEALED IN NEW WALLS, EXISTING FURRED OUT WALLS AND EXISTING ACCESSIBLE CEILINGS. USE OF SURFACE MOUNTED RACEWAYS MUST BE APPROVED BY THE ARCHITECT FOR EACH LOCATION. WHERE APPROVED, UTILIZE WIREMOLD OR APPROVED EQUAL SURFACE MOUNTED RACEWAYS PAINTED TO MATCH SURROUNDING WALLS.

C. REFER TO ARCHITECTURAL ELEVATIONS FOR OUTLET HEIGHTS WHERE THE SPECIFIC OUTLET HEIGHT IS NOT INDICATED ON THIS SHEET. REFER TO THE ELECTRICAL LEGEND FOR THE DEFAULT OUTLET HEIGHT WHEN NOT INDICATED ON ELEVATIONS OR ON THIS SHEET.

D. TERMINATE ALL CONDUITS WITH INSULATED THROAT BUSHING.

KEYED NOTES

◯ SYMBOL USED FOR NOTE CALLOUT.

902 STUB 3/4" CONDUIT ABOVE ACCESSIBLE CEILING. TERMINATE WITH INSULATED THROAT BUSHING.

903 3/4" CONDUIT AND CABLING AS REQUIRED TO PUBLIC ADDRESS SYSTEM INTERFACE JUNCTION BOX. RE:RADIO CABINET DETAIL

904 OWNER FURNISHED, CONTRACTOR INSTALLED 120V CHIME. PROVIDE JUNCTION BOX MOUNTED 18" BELOW CEILING, UNO WITH 1/2" CONDUIT AND CONDUCTORS AS REQUIRED TO ALARM INTERFACE PANEL. RE:ALARM INTERFACE PANEL DETAIL. CONTRACTOR TO MAKE ALL CONNECTIONS. COORDINATE INSTALLATION WITH THE OWNER.

915 JUNCTION BOX AND 1/2" CONDUIT(S) FOR OWNER PROVIDED CARD READER. PROVIDE AND INSTALL 1/2" CONDUIT(S) FROM DOOR MULLION TO THE JUNCTION BOX(S) AS SHOWN ON PLAN FOR OWNER PROVIDED SECURITY SYSTEM. RE:SINGLE DOOR CARD ACCESS DETAIL.

918 JUNCTION BOX LOCATED ABOVE ACCESSIBLE CEILING OR FLUSH MOUNTED 24" ABOVE TOP OF DOOR WITH 1/2" CONDUIT TO DOOR MULLION AND 1/2" CONDUIT TO CARD READER.JUNCTION BOX FOR OWNER PROVIDED SECURITY SYSTEM. RE:SINGLE DOOR CARD ACCESS DETAIL.

923 (2)2" RIGID CONDUITS WITH WEATHER HEADS FOR ANTENNA ARRAY STRUCTURE, RE:ARCHITECT PLANS FOR MOUNTING REQUIREMENTS. ROUTE THE CONDUIT FROM THE ANTENNA ARRAY STRUCTURE TO THE RADIO CABINET JUNCTION BOX. RE:RADIO CABINET DETAIL. ROUTE CONDUIT VIA THE ATTIC SAPCE, DOWN THE 2ND FLOOR WALL ADJACENT TO THE AIR COMPRESSOR, TRANSITION TO THE CEILING SPACE ABOVE THE MAPPING AREA THEN DOWN THE FURRED WALL. PROVIDE ACCESSIBLE PULL-BOXES AS REQUIRED. CONTRACTOR SHALL INSTALL OWNER PROVIDED COAX, COORDINATE WITH OWNER PRIOR TO ROUGH-IN.

926 FLUSH MOUNTED 10"X10"X4" DEEP AV JUNCTION BOX WITH COVER LOCATED IN MILLWORK. PROVIDE (2)2" CONDUITS TO ACCESSIBLE CEILING. TERMINATE WITH INSULATED THROAT BUSHINGS. COORDINATE THE INSTALLATION WITH THE MILLWORK.

929 (4)2" CONDUIT CHASES FROM 1ST FLOOR CEILING TO 2ND FLOOR CEILING SPACE.

ARCHITECT:

COLE ARCHITECTS

COLE ARCHITECTS | 802 W. BANNOCK SUIT 208
Boise, ID 83702 | (208) 345-1800

TCA architecture • planning

TCA | 6211 Roosevelt Way NE
Seattle, WA 98115 | (206) 522-3820

STAMP:

PRELIMINARY

NOT FOR CONSTRUCTION
01-29-16

CONSULTANT:

MUSGROVE ENGINEERING, P.A.
234 S. Whisperwood Way
Boise, Idaho 83709
208.384.0585
www.musgrovepa.com
OVER 30 YEARS OF EXCELLENCE
project number: 15-061

PROJECT INFORMATION:

BOISE CITY OF TREES

BOISE FIRE EST. 1891 DEDICATION PROTECTION

City of Boise Fire Station 4

8485 W Ustick Rd, Boise, ID 83704

REVISIONS:

MARK	DATE	DESCRIPTION

PROJECT PHASE	75% CD'S
PROJECT NUMBER	15-27
PROJECT MANAGER	J. Chatfield
PROJECT ARCHITECT	J. Chatfield
DESIGN	J. Chatfield
DRAWN BY	RM/TM

SHEET NAME:

2ND FLOOR SPECIAL SYSTEMS PLAN

SHEET NUMBER:

E210

12.07.15

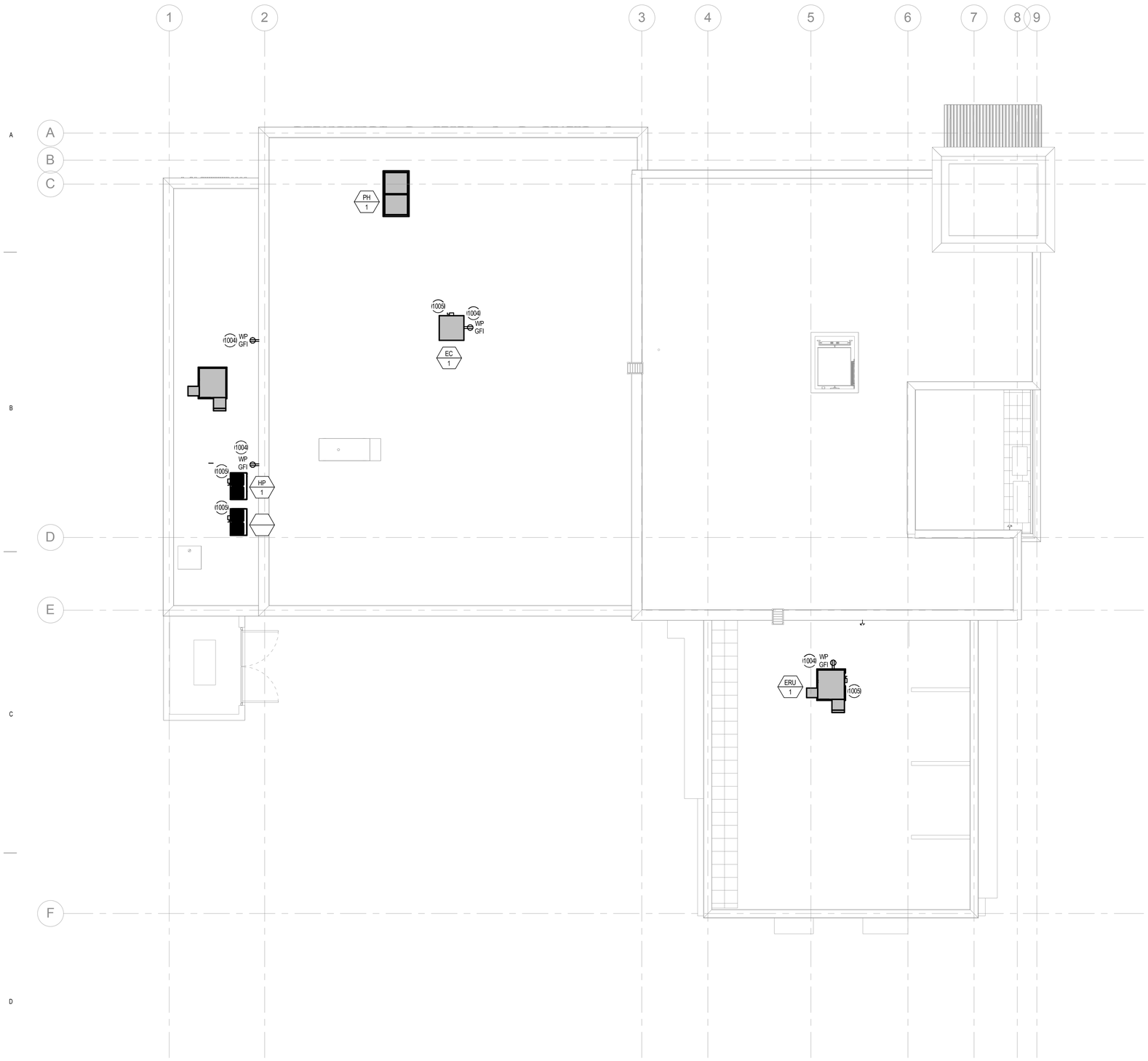

ELECTRICAL ROOF PLAN
1/8" = 1'-0"

NORTH

GENERAL NOTES

A. THESE ELECTRICAL DRAWINGS ARE DIAGRAMMATIC IN NATURE: THEREFORE, THE ELECTRICAL CONTRACTOR SHALL COORDINATE ALL ELECTRICAL EQUIPMENT AND DEVICE LOCATIONS WITH ARCHITECTURAL, MECHANICAL, AND PLUMBING CONTRACTORS PRIOR TO ROUGH-IN. REFER TO ADN COORDINATE WITH ARCHITECTURAL, MECHANICAL, AND PLUMBING DRAWINGS FOR ADDITIONAL WORK THAT IS REQUIRED BY THE CONTRACTOR.

B. ALL CONDUIT AND JUNCTION BOXES ARE TO BE CONCEALED IN NEW WALLS, EXISTING FURRED OUT WALLS AND EXISTING ACCESSIBLE CEILINGS. USE OF SURFACE MOUNTED RACEWAYS MUST BE APPROVED BY THE ARCHITECT FOR EACH LOCATION. WHERE APPROVED, UTILIZE WIREMOLD OR APPROVED EQUAL SURFACE MOUNTED RACEWAYS PAINTED TO MATCH SURROUNDING WALLS.

C. MECHANICAL EQUIPMENT SHOWN IN APPROXIMATE LOCATION. COORDINATE WITH MECHANICAL CONTRACTOR.

KEYED NOTES

◯ SYMBOL USED FOR NOTE CALLOUT.

1004 MOUNT RECEPTACLE ON RIGID CONDUIT 12" ABOVE ROOF DECK OR ON MECHANICAL UNIT WHERE APPLICABLE.

1005 FIELD COORDINATE DISCONNECT AND CONDENSER LOCATION WITH DIVISION 23 TO MAINTAIN ALL REQUIRED CLEARANCES.

ARCHITECT:

COLE ARCHITECTS

COLE ARCHITECTS | 802 W. BANNOCK SUIT 208
Boise, ID 83702 | (208) 345-1800

TCA
architecture • planning

TCA | 6211 Roosevelt Way NE
Seattle, WA 98115 | (206) 522-3820

STAMP:

PRELIMINARY
NOT FOR CONSTRUCTION
01-29-16

CONSULTANT:

MUSGROVE ENGINEERING, P.A.
234 S. Whisperwood Way
Boise, Idaho 83709
208.384.0585
www.musgrovepa.com
OVER 30 YEARS OF EXCELLENCE
project number: 15-061

PROJECT INFORMATION:

City of Boise Fire Station 4

8485 W Ustick Rd, Boise, ID 83704

REVISIONS:

MARK	DATE	DESCRIPTION

PROJECT PHASE	75% CD'S
PROJECT NUMBER	15-27
PROJECT MANAGER	J. Chatfield
PROJECT ARCHITECT	J. Chatfield
DESIGN	J. Chatfield
DRAWN BY	RM/TM

SHEET NAME:

ELECTRICAL ROOF PLAN

SHEET NUMBER:

E300

12.07.15

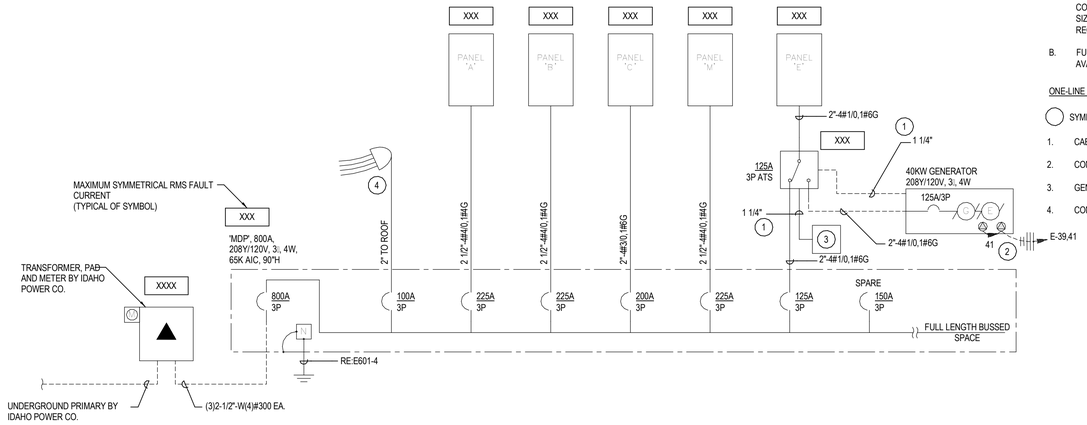

ONE-LINE DIAGRAM

12" = 1'-0"

ONE-LINE DIAGRAM GENERAL NOTES:

A. CONDUIT, CONDUCTORS AND AIC CALCULATIONS FOR ALL SERVICE, PANEL AND EQUIPMENT FEEDERS INDICATED ON THE ONE-LINE HAVE BEEN SIZED BASED ON COPPER. THE CONTRACTOR MAY USE COMPRESSED ALUMINUM CONDUCTORS FOR THESE FEEDERS PROVIDING THE CONDUIT, CONDUCTOR SIZES AND AIC CALCULATIONS ARE ADJUSTED AS REQUIRED TO MEET ALL NATIONAL ELECTRICAL CODE REQUIREMENTS.

B. FURNISH AND INSTALL ENGRAVED LABEL ON THE FRONT OF THE MAIN SERVICE EQUIPMENT NOTING THE AVAILABLE FAULT CURRENT VALUE SHOWN.

ONE-LINE DIAGRAM KEYED NOTES:

◯ SYMBOL USED FOR NOTE CALLOUT.

1. CABLING AS REQUIRED.
2. CONNECTIONS FOR GENERATOR BATTERY CHARGER AND HEATER.
3. GENERATOR ANNUNICATOR PANEL. RE:E-103
4. CONDUIT AS INDICATED TO ROOF. PROVIDE WEATHER HEAD AND STUB 18" ABOVE THE ROOF.

Switchboard: MDP

Location: Space 27
Supply From:
Mounting:
Enclosure:
Volts: 120/208 Wye
Phases: 3
Wires: 4
A.I.C. Rating:
Mains Type: BREAKER
Mains Rating:
MCB Rating: 800 A

Notes:

CKT	Circuit Description	# of Poles	Frame Size	Trip Rating	Load	Remarks
1						
2						
3						
4						
5						
6						
7						
8						
9						
10						
11						
12						
13						
14						
15						
16						
17						
18						
19						
20						
				Total Conn. Load:	0 VA	
				Total Amps:	0 A	

Legend:

Load Classification	Connected Load	Demand Factor	Estimated Demand	Panel Totals	
				Total Conn. Load:	0 VA
				Total Est. Demand:	0 VA
				Total Conn. Current:	0 A
				Total Est. Demand Current:	0 A

Branch Panel: A

Location: Space 27
Supply From:
Mounting: Surface
Enclosure: Type 1
Volts: 120/208 Wye
Phases: 3
Wires: 4
A.I.C. Rating:
Mains Type:
Mains Rating: 225 A
MCB Rating:

Notes:

CKT	Circuit Description	Trip	Poles	A		B		C		Poles	Trip	Circuit Description	CKT
1													2
3													4
5													6
7													8
9													10
11													12
13													14
15													16
17													18
19													20
21													22
23													24
25													26
27													28
29													30
31													32
33													34
35													36
37													38
39													40
41													42
			Total Load:	0 VA		0 VA		0 VA					
			Total Amps:	0 A		0 A		0 A					

Legend:

ARCHITECT:

COLE ARCHITECTS

COLE ARCHITECTS | 802 W. BANNOCK SUIT 208
Boise, ID 83702 | (208) 345-1800

TCA | 6211 Roosevelt Way NE
Seattle, WA 98115 | (206) 522-3820

STAMP:

PRELIMINARY

NOT FOR CONSTRUCTION
01-29-16

CONSULTANT:

MUSGROVE ENGINEERING, P.A.
234 S. Whisperwood Way
Boise, Idaho 83709
208.384.0585
www.musgrovepa.com
OVER 30 YEARS OF EXCELLENCE
project number: 15-061

PROJECT INFORMATION:

City of Boise Fire Station 4

8485 W Ustick Rd, Boise, ID 83704

REVISIONS:

MARK	DATE	DESCRIPTION

PROJECT PHASE	75% CD'S
PROJECT NUMBER	15-27
PROJECT MANAGER	J. Chatfield
PROJECT ARCHITECT	J. Chatfield
DESIGN	J. Chatfield
DRAWN BY	RM/TM

SHEET NAME:

ONE-LINE DIAGRAM/ELECTRICAL SCHEDULES

SHEET NUMBER:

E400

12.07.15

Branch Panel: B

Location: Space 27
Supply From:
Mounting: Surface
Enclosure: Type 1

Volts: 120/208 Wye
Phases: 3
Wires: 4

A.I.C. Rating:
Mains Type:
Mains Rating: 225 A
MCB Rating:

Notes:

CKT	Circuit Description	Trip	Poles	A		B		C		Poles	Trip	Circuit Description	CKT
1													2
3													4
5													6
7													8
9													10
11													12
13													14
15													16
17													18
19													20
21													22
23													24
25													26
27													28
29													30
31													32
33													34
35													36
37													38
39													40
41													42
			Total Load:	0 VA		0 VA		0 VA					
			Total Amps:	0 A		0 A		0 A					

Legend:

Branch Panel: E

Location: Space 27
Supply From:
Mounting: Surface
Enclosure: Type 1

Volts: 120/208 Wye
Phases: 3
Wires: 4

A.I.C. Rating:
Mains Type:
Mains Rating: 125 A
MCB Rating:

Notes:

CKT	Circuit Description	Trip	Poles	A		B		C		Poles	Trip	Circuit Description	CKT
1	OVERHEAD DOOR	20 A	1	696 VA	696 VA					1	20 A	OVERHEAD DOOR	2
3	OVERHEAD DOOR	20 A	1			696 VA	1196...			1	20 A	OVERHEAD DOOR	4
5	OVERHEAD DOOR	20 A	1					1196...	1196...	1	20 A	OVERHEAD DOOR	6
7	ACCESS CONTROL DOORS	20 A	1	180 VA	480 VA					1	20 A	ACCESS CONTROL DOORS	8
9	FIRE ALARM BELL	20 A	1			180 VA	0 VA			1	20 A	FACP	10
11													12
13													14
15													16
17													18
19													20
21													22
23													24
25													26
27													28
29													30
31													32
33													34
35													36
37													38
39													40
41													42
			Total Load:	2052 VA		2072 VA		2392 VA					
			Total Amps:	17 A		17 A		20 A					

Legend:

Branch Panel: C

Location: Space 55
Supply From:
Mounting: Surface
Enclosure: Type 1

Volts: 120/208 Wye
Phases: 3
Wires: 4

A.I.C. Rating:
Mains Type:
Mains Rating: 200 A
MCB Rating:

Notes:

CKT	Circuit Description	Trip	Poles	A		B		C		Poles	Trip	Circuit Description	CKT
1													2
3													4
5													6
7													8
9													10
11													12
13													14
15													16
17													18
19													20
21													22
23													24
25													26
27													28
29													30
31													32
33													34
35													36
37													38
39													40
41													42
			Total Load:	0 VA		0 VA		0 VA					
			Total Amps:	0 A		0 A		0 A					

Legend:

Branch Panel: M

Location: Space 55
Supply From:
Mounting: Surface
Enclosure: Type 1

Volts: 120/208 Wye
Phases: 3
Wires: 4

A.I.C. Rating:
Mains Type:
Mains Rating: 225 A
MCB Rating:

Notes:

CKT	Circuit Description	Trip	Poles	A		B		C		Poles	Trip	Circuit Description	CKT
1													2
3													4
5													6
7													8
9													10
11													12
13													14
15													16
17													18
19													20
21													22
23													24
25													26
27													28
29													30
31													32
33													34
35													36
37													38
39													40
41													42
			Total Load:	0 VA		0 VA		0 VA					
			Total Amps:	0 A		0 A		0 A					

Legend:

ARCHITECT:

COLE ARCHITECTS

COLE ARCHITECTS | 802 W. BANNOCK SUIT 208
Boise, ID 83702 | (208) 345-1800

TCA
architecture • planning

TCA | 6211 Roosevelt Way NE
Seattle, WA 98115 | (206) 522-3820

STAMP:

PRELIMINARY
NOT FOR CONSTRUCTION
01-29-16

CONSULTANT:

MUSGROVE ENGINEERING, P.A.
234 S. Whisperwood Way
Boise, Idaho 83709
208.384.0585
www.musgrovepa.com
OVER 30 YEARS OF EXCELLENCE
project number: 15-061

PROJECT INFORMATION:

BOISE CITY OF TREES

BOISE FIRE DEDICATION

City of Boise Fire Station 4

8485 W Ustick Rd, Boise, ID 83704

REVISIONS:

MARK	DATE	DESCRIPTION

PROJECT PHASE	75% CD'S
PROJECT NUMBER	15-27
PROJECT MANAGER	J. Chatfield
PROJECT ARCHITECT	J. Chatfield
DESIGN	J. Chatfield
DRAWN BY	RM/TM

SHEET NAME:

ELECTRICAL SCHEDULES

SHEET NUMBER:

E401

12.07.15

Lighting Fixture Schedule

Type Mark	Description	Mounting	Lamp	Manufacturer	Model	Or Equal By	Wattage Comments	Notes
B1	4' LENSED LED STRIPLIGHT, 3000 LUMENS, 35K COLOR TEMP.	SURFACE	42W LED, 3000 LUMENS	LITHONIA LTG	ZL2N-L48-3000LM-MDD-MVOLT-35K-80CRI-WH	LIGHTOLIER/METALUX/H.E. WILLIAMS	42W	1
B1E	4' LENSED LED STRIPLIGHT, 3000 LUMENS, 35K COLOR TEMP., EMERGENCY BATTERY PACK	SURFACE	42W LED, 3000 LUMENS	LITHONIA LTG	ZL2N-L48-3000LM-MDD-MVOLT-35K-80CRI-BSL722-WH	LIGHTOLIER/METALUX/H.E. WILLIAMS	42W	1
EL1	ARCHITECTURAL EMERGENCY LIGHTING UNIT, INTEGRAL BATTERY, COLD-WEATHER TYPE, DARK BRONZE FINISH	WALL MOUNTED AS NOTED ON PLANS	12W	LITHONIA LTG	AFN-DB-EXT	LITHONIA	12W	1
EX1	EXIT LIGHT, DIE-CAST ALUMINUM, LED, GREEN LETTERING, DARK BRONZE HOUSING COLOR, SINGLE FACE	CEILING MOUNTED	LED	LITHONIA LTG	LE-S-BZ-1-G-EL N		1.3	1
EX2	EXIT LIGHT, DIE-CAST ALUMINUM, LED, GREEN LETTERING, DARK BRONZE HOUSING COLOR, DOUBLE FACE	CEILING MOUNTED	LED	LITHONIA LTG	LE-S-BZ-2-G-EL N		1.3	1
HB1	LED HIGH BAY	SURFACE	131W LED, 12000 LUMENS	LITHONIA LTG	IBH-12000LM-L/LENS-MD-120-GZ10-40K-80CRI-WH		131	1
PD1	LOBBY PENDANT FIXTURE	PENDANT	71.7W LED, 5109 LUMENS	ADVENT/SPI LIGHTING	AIP8152-L71.7W-120-277V-3500K-PT**		71.7W	1
PL1								
RC1	ROUND RECESSED, 6" APERTURE, DIMMING	CEILING RECESSED	26W LED, 1500 LUMENS	LITHONIA LTG	LDN6-35/15-LO6-AR-120	LIGHTOLIER/PORTFOLIO/PRESCOLITE	26W	1
RC1E	ROUND RECESSED, 6" APERTURE, WITH EMERGENCY BATTERY PACK, DIMMING	CEILING RECESSED	26W LED, 1500 LUMENS	LITHONIA LTG	LDN6-35/15-LO6-AR-120-EL	LIGHTOLIER/PORTFOLIO/PRESCOLITE	26W	1
VF1	2X2 VT SERIES VOLUMETRIC LED TROFFER	CEILING RECESSED	20W LED, 2000 LUMENS	LITHONIA LTG	2VTL2-20L-ADP-EZ1-LP835		20W	1
VF1E	2X2 VT SERIES VOLUMETRIC LED TROFFER, WITH EMERGENCY BATTERY PACK	CEILING RECESSED	20W LED, 2000 LUMENS	LITHONIA LTG	2VTL2-20L-ADP-EZ1-LP835-EL7L		20W	1
VF2	2X4 VT SERIES VOLUMETRIC LED TROFFER, DIMMING	CEILING RECESSED	30W LED, 3000 LUMENS	LITHONIA LTG	2VTL4-30L-ADP-EZ1-LP835		30W	1
VF3	1X4 VT SERIES VOLUMETRIC LED TROFFER, DIMMING	CEILING RECESSED	28.98W LED, 3000 LUMENS	LITHONIA LTG	VTL4-30L-ADP-EZ1-LP835		29.98W	1
VF4	DORM FIXTURE, 1X4 VT SERIES VOLUMETRIC LED TROFFER, DIMMING	CEILING RECESSED	28.98W LED, 3000 LUMENS	LITHONIA LTG	VTL4-30L-ADP-EZ1-LP835		26.7W	1
VP1	4' LOW-PROFILE ENCLOSED AND GASKETED FIXTURE	WALL MOUNTED	39W LED, 3418 LUMENS	LITHONIA LTG	FEM4LED-3L-IMAFL-120		39W	1
WB1E	4' WALL MOUNTED LED, WITH LED EMERGENCY BATTERY PACK	WALL MOUNTED	28.2W LED, 3095 LUMENS	LITHONIA LTG	WL4-30L-EZ1-LP835-EL14L		28.2W	1
WB2	2' WALL BRACKET	WALL MOUNTED	17.5W LED, 1796 LUMENS	LITHONIA LTG	WL2-18L-EZ1-LP835		17.5W	1
WB3	EXTERIOR WALL SCONCE	WALL MOUNTED	20W LED, 1854 LUMENS	LITHONIA LTG	OLWX1 LED-20W-40K		20W	1
WM1	ARCHITECTURAL WALL SCONCE	WALL MOUNTED	(1)LED ENGINE	LITHONIA LTG	WSQ LED-1-10A700/40K-SR3-MVOLT-ELCW(WHERE INDICATED)-DDBXD		29W	1
WS1	WALL SCONCE	WALL MOUNTED	9W LED, 803 LUMENS	MODERN FORMS	WS-11807-WT		9W	1
								1

LIGHTING FIXTURE SCHEDULE NOTES

1. SUBSTITUTIONS WILL BE ALLOWED IF SUBMITTED PRIOR TO BID DATE BY THE GREATER OF 7 BUSINESS DAYS OR THE TIME PERIOD SPECIFIED BY DIVISION 1 SPECIFICATIONS, AND IF DEEMED EQUAL BY THE ENGINEER. THE CONTRACTOR IS RESPONSIBLE FOR ENSURING SUBSTITUTED MEET OR EXCEED THE SPECIFICATIONS OF THE FIXTURES SPECIFIED.

ARCHITECT:

COLE ARCHITECTS

COLE ARCHITECTS | 802 W. BANNOCK SUIT 208
Boise, ID 83702 | (208) 345-1800

TCA

architecture • planning

TCA | 6211 Roosevelt Way NE
Seattle, WA 98115 | (206) 522-3820

STAMP:

PRELIMINARY

NOT FOR CONSTRUCTION
01-29-16

CONSULTANT:

MUSGROVE ENGINEERING, P.A.
234 S. Whisperwood Way
Boise, Idaho 83709
208.384.0585
www.musgrovepa.com
OVER 30 YEARS OF EXCELLENCE
project number: 15-061

PROJECT INFORMATION:

BOISE CITY OF TREES

BOISE FIRE Est. 1873 DEDICATION

City of Boise Fire Station 4

8485 W Ustick Rd, Boise, ID 83704

REVISIONS:

MARK	DATE	DESCRIPTION

PROJECT PHASE	75% CD'S
PROJECT NUMBER	15-27
PROJECT MANAGER	J. Chatfield
PROJECT ARCHITECT	J. Chatfield
DESIGN	J. Chatfield
DRAWN BY	RM/TM

SHEET NAME:

ELECTRICAL SCHEDULES

SHEET NUMBER:

E402

12.07.15

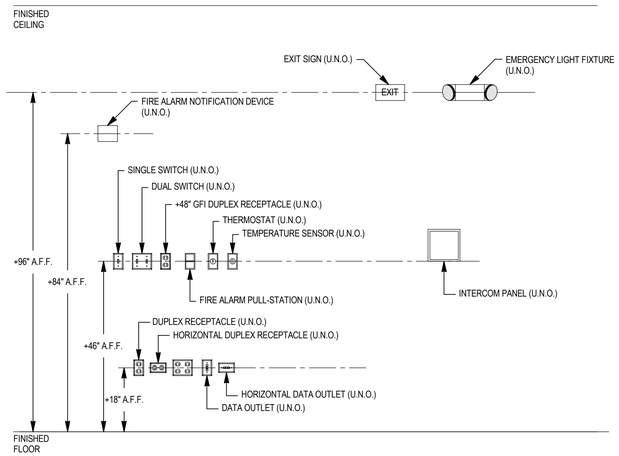

DETAIL GENERAL NOTES:

1. PROVIDE FRAMING AS REQUIRED.

1 STANDARD MOUNTING HEIGHT
NTS

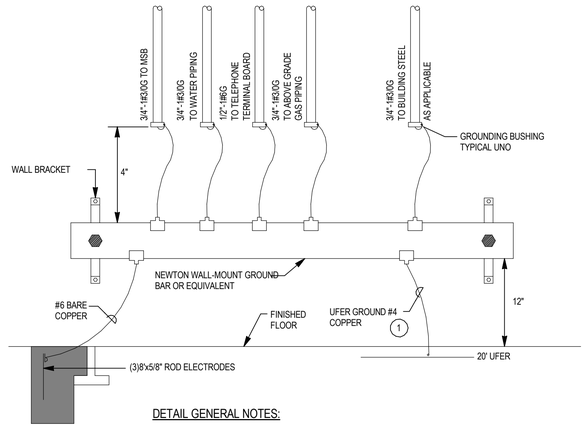

DETAIL GENERAL NOTES:

A. ALL CONDUCTORS SHALL BE IN EMT CONDUIT UNLESS NOTED OTHERWISE. ALL CONDUIT SHALL HAVE A GROUNDING BUSHING AT EACH END.
B. ALL CONNECTIONS SHALL BE EXOTHERMIC WELD, LISTED PRESSURE CONNECTORS, LISTED CLAMPS OR OTHER LISTED MEANS.

DETAIL KEYED NOTES:

(#) SYMBOL USED FOR NOTE CALLOUT.

1. UFER GROUND TO BE 20' OF #4 AWG COPPER OR 1/2" MINIMUM DIAMETER STEEL REINFORCING BAR PER 250.52.

2 GROUNDING BAR DETAIL
NTS

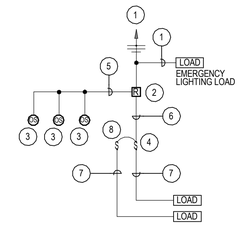

DETAIL KEYED NOTES:

(#) SYMBOL USED FOR NOTE CALLOUT.

1. UNSWITCHED LINE VOLTAGE POWER FEED FROM LOCAL PANEL.
2. POWER/RELAY PACK RATED FOR UP TO 3 SENSORS AND 15A LINE VOLTAGE SWITCHING. PROVIDE QUANTITY AS REQUIRED FOR A COMPLETE INSTALLATION.
3. LOW VOLTAGE OCCUPANCY SENSOR, UP TO 3 PER POWER PACK. PROVIDE WITH ISOLATED NO/NC AUXILIARY CONTACTS FOR HVAC INTERLOCK. QUANTITY AS INDICATED ON PLANS. LOCATION PER THE MANUFACTURERS RECOMMENDATIONS.
4. WALL MOUNTED LINE VOLTAGE SNAP SWITCH(ES). QUANTITY AND LOCATION AS INDICATED ON PLANS.
5. LOW VOLTAGE POWER AND CONTROL CONDUCTORS AS REQUIRED FOR A COMPLETE INSTALLATION.
6. LINE VOLTAGE SWITCHED LEG FROM RELAY PACK TO LOCAL WALL SWITCHES.
7. LINE VOLTAGE SWITCHED LEG FROM SWITCHES TO LIGHTING LOAD.
8. SECOND SWITCH FOR DUAL LEVEL LIGHTING WHERE INDICATED ON PLANS.

3 OCCUPANCY SENSOR DETAIL
NTS

4 LIGHTING CONTROL PANEL DETAIL
NTS

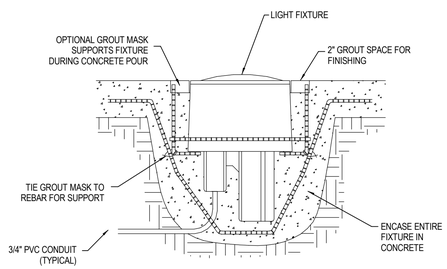

5 IN-GRADE FIXTURE DETAIL
NTS

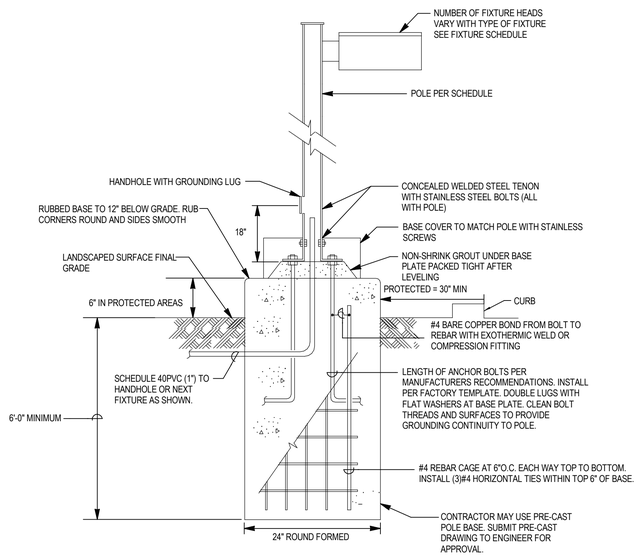

DETAIL GENERAL NOTES:

1. INCREASE THE SPECIFIED HEIGHT OF THE POLE BY 2'-0" TO ENSURE UNIFORM FIXTURE MAINTAIN HEIGHT WHERE THE 6" BASE IS USED.
2. PROTECTED AREA IMPLIES THE POLE IS INSTALLED AT LEAST 30" FROM PARKING OR DRIVE AREAS.

6 POLE BASE DETAIL
NTS

ARCHITECT:

COLE ARCHITECTS

COLE ARCHITECTS | 802 W. BANNOCK SUIT 208
Boise, ID 83702 | (208) 345-1800

TCA architecture • planning

TCA | 6211 Roosevelt Way NE
Seattle, WA 98115 | (208) 522-3820

STAMP:

PRELIMINARY
NOT FOR CONSTRUCTION
01-29-16

CONSULTANT:

MUSGROVE ENGINEERING, P.A.
234 S. Whisperwood Way
Boise, Idaho 83709
208.384.0585
www.musgrovepa.com
OVER 30 YEARS OF EXCELLENCE
project number: 15-061

PROJECT INFORMATION:

City of Boise Fire Station 4

8485 W Ustick Rd, Boise, ID 83704

REVISIONS:

MARK	DATE	DESCRIPTION

PROJECT PHASE	75% CD'S
PROJECT NUMBER	15-27
PROJECT MANAGER	J. Chatfield
PROJECT ARCHITECT	J. Chatfield
DESIGN	J. Chatfield
DRAWN BY	RM/TM

SHEET NAME:

ELECTRICAL DETAILS

SHEET NUMBER:

E500

12.07.15

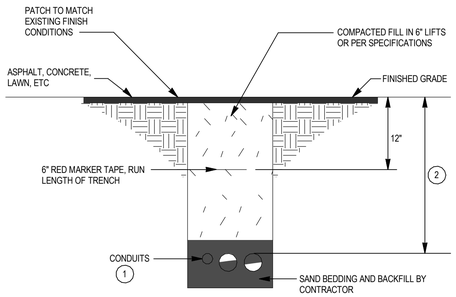

DETAIL KEYED NOTES:

(#) SYMBOL USED FOR NOTE CALLOUT.

1. IF MULTIPLE CONDUITS SHARE TRENCH, PROVIDE SPACING BETWEEN CONDUITS. PROVIDE ZIP TIES, AND TIE ALL CONDUITS TOGETHER TO ENSURE STABILITY.
2. BURIAL DEPTH TO BE VERIFIED WITH UTILITIES AND AUTHORITY HAVING JURISDICTION: ELECTRICAL FEEDERS, COMMUNICATIONS: 24" MINIMUM
   UNDERGROUND SECONDARY: 30" MINIMUM
   UNDERGROUND PRIMARY: 42" MINIMUM

(1) TRENCHING DETAIL
NTS

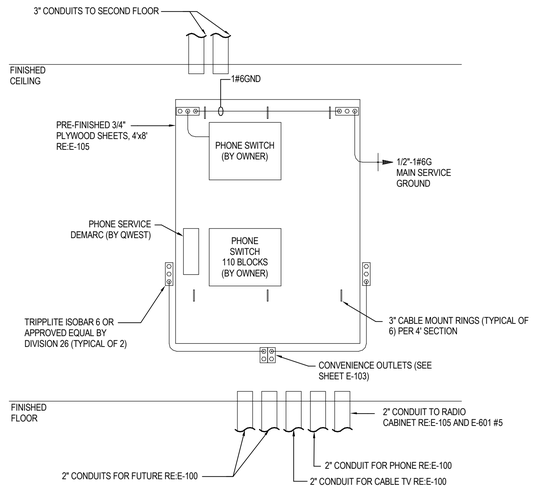

(2) TELEPHONE TERMINAL BOARD DETAIL
NTS

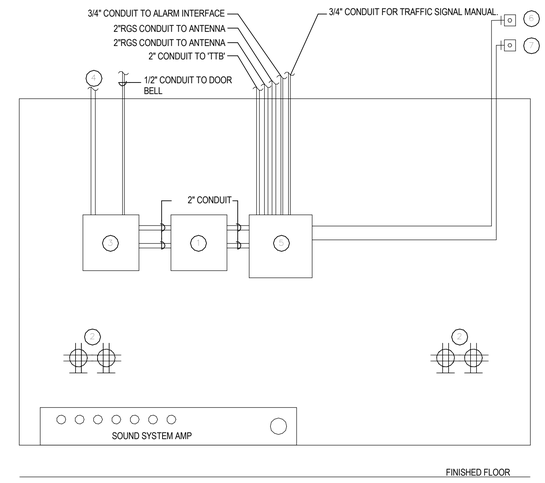

RADIO CABINET DETAIL KEYED NOTES:

1. RECESSED JUNCTION BOX WITH COVER. RE:E-105.
2. DUPLEX RECEPTACLES MOUNTED INSIDE CABINET. RE:E-103.
3. RECESSED JUNCTION BOX FOR PUBLIC ADDRESS INTERFACE. RE:E-105.
4. 3/4" CONDUITS TO SPEAKERS/VOLUME CONTROLS AS REQUIRED. RE:E-105.
5. RECESSED JUNCTION BOX FOR ALARM INTERFACE. RE:E-105.
6. PROVIDE RED SQUARE D # 9001KR1RH13 MOMENTARY PUSH BUTTON WITH (1)N.O. AND (1)N.C. CONTACTS FOR ALARM RESET WITH 1/2" CONDUIT AND 2#14 TO ALARM INTERFACE JUNCTION BOX. LABEL AS "ALARM RESET".
7. PROVIDE BLACK SQUARE D # 9001KR1RH13 MOMENTARY PUSH BUTTON WITH (1)N.O. AND (1)N.C. CONTACTS FOR ALARM TEST WITH 1/2" CONDUIT AND 2#14 TO ALARM INTERFACE JUNCTION BOX. LABEL AS "ALARM TEST".

(3) RADIO CABINET DETAIL
12" = 1'-0"

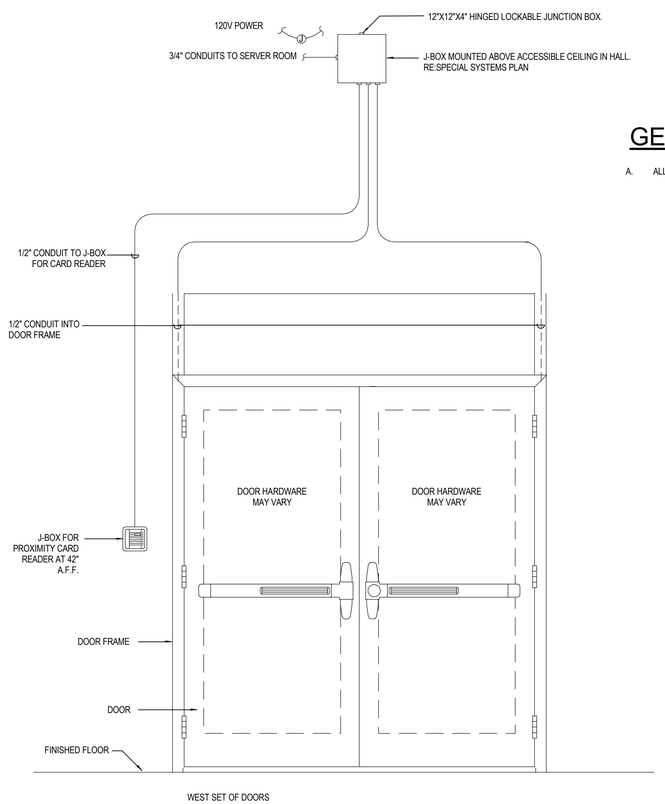

(4) MAIN ENTRANCE CARD ACCESS
NTS

GENERAL NOTES:

A. ALL SECURITY CABLING SHALL BE ROUTED IN RACEWAYS.

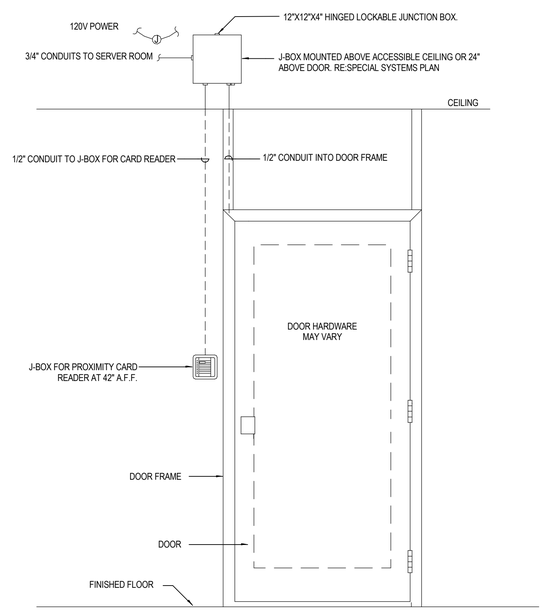

(5) SINGLE DOOR ENTRANCE CARD ACCESS
NTS

GENERAL NOTES:

A. ALL SECURITY CABLING SHALL BE ROUTED IN RACEWAYS.

ARCHITECT:

COLE ARCHITECTS

COLE ARCHITECTS | 802 W. BANNOCK SUIT 208
Boise, ID 83702 | (208) 345-1800

TCA architecture • planning
TCA | 6211 Roosevelt Way NE
Seattle, WA 98115 | (206) 522-3820

STAMP:

PRELIMINARY
NOT FOR CONSTRUCTION
01-29-16

CONSULTANT:

MUSGROVE ENGINEERING, P.A.
234 S. Whisperwood Way
Boise, Idaho 83709
208.384.0585
www.musgrovepa.com
OVER 30 YEARS OF EXCELLENCE
project number: 15-061

PROJECT INFORMATION:

City of Boise Fire Station 4

8485 W Ustick Rd, Boise, ID 83704

REVISIONS:

MARK	DATE	DESCRIPTION

PROJECT PHASE	75% CD'S
PROJECT NUMBER	15-27
PROJECT MANAGER	J. Chatfield
PROJECT ARCHITECT	J. Chatfield
DESIGN	J. Chatfield
DRAWN BY	RM/TM

SHEET NAME:

ELECTRICAL DETAILS

SHEET NUMBER:

E501

12.07.15

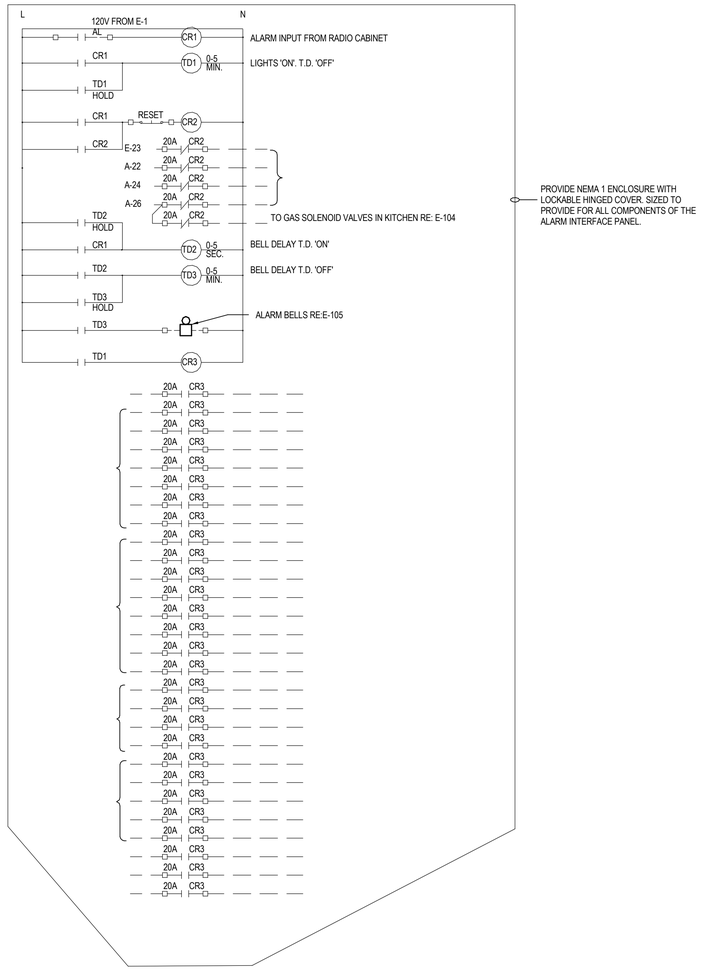

1 ALARM INTERFACE PANEL
NTS

ARCHITECT:

COLE ARCHITECTS

COLE ARCHITECTS | 802 W. BANNOCK SUIT 208
Boise, ID 83702 | (208) 345-1800

TCA architecture • planning

TCA | 6211 Roosevelt Way NE
Seattle, WA 98115 | (206) 522-3820

STAMP:

PRELIMINARY

NOT FOR CONSTRUCTION
01-29-16

CONSULTANT:

MUSGROVE ENGINEERING, P.A.
234 S. Whisperwood Way
Boise, Idaho 83709
208.384.0585
www.musgrovepa.com
OVER 30 YEARS OF EXCELLENCE
project number: 15-061

PROJECT INFORMATION:

BOISE CITY OF TREES

BOISE FIRE EST. 1891 DEDICATION

City of Boise Fire Station 4

8485 W Ustick Rd, Boise, ID 83704

REVISIONS:

MARK	DATE	DESCRIPTION

PROJECT PHASE	75% CD'S
PROJECT NUMBER	15-27
PROJECT MANAGER	J. Chatfield
PROJECT ARCHITECT	J. Chatfield
DESIGN	J. Chatfield
DRAWN BY	RM/TM

SHEET NAME:

ELECTRICAL DETAILS

SHEET NUMBER:

E502

12.07.15