DarkAct: A RGB-Thermal Dataset and Fusion Framework for Multimodal Low-Light Action Recognition

Yuanjun Tan[1†], Aoran Xiao[2†], Liqian Deng[1], Zhigang Tu[1*]
[1]Key Laboratory of Information Engineering in Surv., Map. and Re. Sen., Wuhan University, China
[2]School of Electronics and Information, Harbin Institute of Technology, Harbin, China
yuanjuntan@whu.edu.cn, aoran.xiao@hit.edu.cn, dengliqian816@163.com, tuzhigang@whu.edu.cn
[†]Equal contribution, [*]Corresponding author

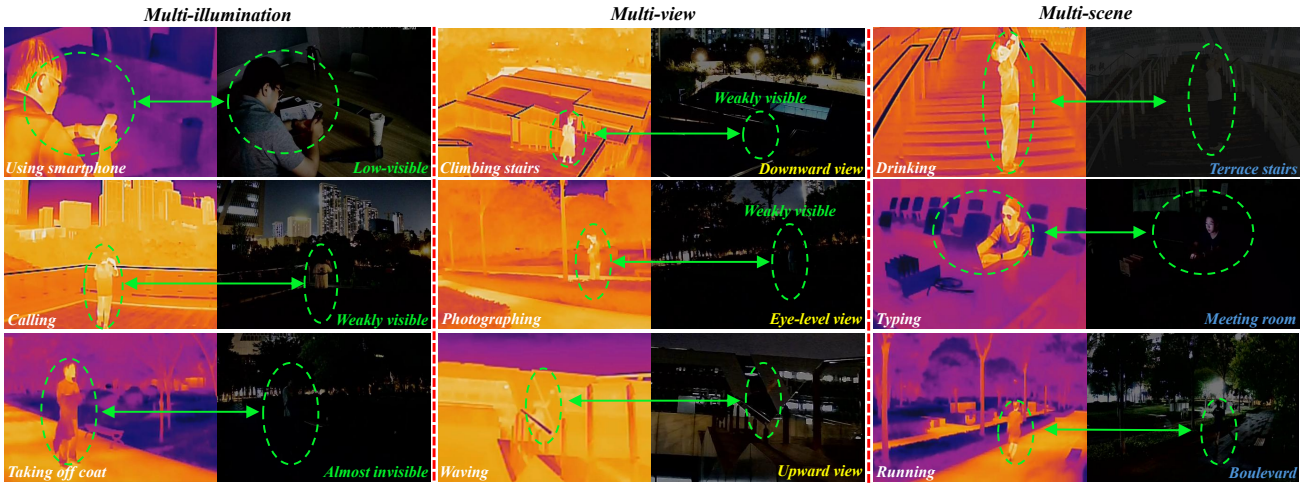

Figure 1. **Overview of the DarkAct dataset.** DarkAct captures diverse human actions under challenging low-light conditions across three dimensions: (1) *Multi-Illumination*: varying visibility levels ranging from weakly visible to almost invisible scenes; (2) *Multi-View*: actions observed from upward, eye-level, and downward viewpoints; and (3) *Multi-Scene*: recordings from a wide range of indoor and outdoor environments. Each RGB frame is paired with a precisely aligned thermal frame, providing strong cross-spectral complementarity for robust action recognition in dark environments.

Abstract

Human action recognition (HAR) in low-light environments remains challenging due to degraded visibility, illumination variance, and loss of appearance cues. We introduce DarkAct, a large-scale and high-quality RGB–thermal video dataset purpose-built for multimodal action recognition under low illumination. DarkAct contains 12,778 paired RGB–thermal videos covering 27 human actions across diverse viewpoints and scenes, offering a novel and comprehensive benchmark for understanding human actions in dark environments. We conduct extensive experiments on DarkAct, systematically benchmarking unimodal HAR models, multimodal fusion frameworks, and vision-language foundation models. Their limited performance on DarkAct underscores the urgent need for more robust perception systems under adverse illumination. To address this, we propose DarkAct-Net, an RGB–thermal fusion framework that enhances human-centric representation and achieves adaptive cross-modal fusion , enabling robust and fine-grained action recognition across diverse lighting conditions. Dataset and code are available at https://github.com/darkact-creator/DarkAct.

1. Introduction

Human action recognition (HAR) aims to identify human movements and behaviors from visual data, supporting applications such as intelligent surveillance, human–computer interaction, and autonomous systems. Despite remarkable progress, most existing approaches [24, 27, 30, 47, 55, 65]

assume well-lit environments. In contrast, recognizing actions under low-light conditions remains challenging due to degraded visibility, motion blur, and the loss of discriminative appearance information. Beyond these technical challenges, low-light scene understanding is also critical for safety-sensitive applications and for deployment in regions with limited lighting infrastructure.

A promising direction is RGB–thermal fusion, which combines the strengths of RGB imagery under normal illumination and thermal sensing under poor lighting. However, progress in this field has been constrained by the lack of large-scale, high-quality datasets. To bridge this gap, we present **DarkAct**, a comprehensive RGB–thermal video dataset purpose-built for multimodal action recognition under low illumination. DarkAct contains 12,778 paired RGB–thermal videos covering 27 representative human actions, captured across diverse scenes and viewpoints. Each video includes precisely synchronized RGB and thermal streams. As illustrated in Figure 1, DarkAct features diverse human body proportions, rich viewpoint variation, and realistic scene diversity, providing a valuable benchmark for advancing action recognition under adverse lighting conditions.

Extensive benchmarking on DarkAct reveals that it poses substantial challenges for existing HAR methods, including both single-modality and multimodal fusion approaches. Furthermore, we systematically evaluate recent vision–language foundation models (VLMs) and find that their performance degrades notably in low-light and zero-shot settings, indicating limited generalization under illumination shifts. These findings highlight the urgency of developing robust recognition frameworks capable of operating reliably in dark environments.

To this end, we propose **DarkAct-Net**, a baseline RGB–thermal fusion model designed for robust human action recognition in low-light conditions. DarkAct-Net comprises two key modules: Motion-Aware Attention (MAA) and Light-Adaptive Fusion (LAF). MAA enhances human-centric features by exploiting temporal differences to identify motion-salient regions, suppressing noisy backgrounds that dominate low-light scenes. LAF adaptively integrates RGB and thermal features according to scene illumination and modality reliability through a dynamic attention-query token mechanism, achieving balanced and complementary fusion. Together, these modules enable DarkAct-Net to deliver robust and fine-grained action recognition across diverse lighting conditions.

Our main contributions are threefold: 1) We construct DarkAct, the first large-scale and high-quality RGB–thermal dataset specifically designed for action recognition under low illumination, to the best of our knowledge. 2) We benchmark a variety of single-modality, multimodal, and foundation models on DarkAct, revealing significant challenges for existing methods in dark environments. 3) We propose DarkAct-Net, a novel baseline fusion framework incorporating Motion-Aware Attention (MAA) and Light-Adaptive Fusion (LAF) modules that achieve robust performance across diverse lighting conditions.

2. Related Work

2.1. Human Action Recognition Datasets

HAR has been extensively studied using a wide range of video datasets. Most existing datasets are *single-modality*, primarily relying on RGB video data [20, 21, 27]. These datasets are predominantly collected under well-lit conditions. A few non-RGB datasets explore alternative modalities such as thermal imaging, infrared sensing [19], and point clouds [4], yet these datasets are typically small in scale, or are limited to constrained laboratory settings. On the other hand, low-light HAR datasets are scarce. ARID [63] offers 11 third-person categories in dark but features mostly static, human-centric scenes captured from fixed viewpoints.

In recent years, several *multimodal* datasets have been introduced to complement RGB videos with additional sensing modalities, such as depth [45], skeleton [32], and motion-sensor data (e.g., inertial, accelerometer, or gyroscope signals) [26]. However, these required sensors are often expensive or impractical for large-scale deployment. In contrast, thermal imaging offers a low-cost, illumination-invariant complement to RGB. Our *DarkAct* fills this gap as the first large-scale paired RGB–thermal dataset for action recognition under low-light conditions.

2.2. Human Action Recognition Methods

HAR has been extensively studied over the past decade. A major line of research focuses on *video-based recognition*, where accurate modeling of spatial and temporal information is essential. Early approaches relied on convolutional neural networks (CNNs) and recurrent architectures to capture motion dynamics and spatial context [3, 16, 17, 35, 54, 59, 60, 77], while recent works [5, 10, 12, 28, 36, 38, 58, 61] have adopted Vision Transformer architectures which excel at modeling long-range spatio-temporal dependencies and global motion cues. Another research direction leverages skeleton-based representations [6, 11, 15, 56, 68], which describe human motion as a sequence of spatio-temporal joint coordinates extracted by pose estimators. Although effective in structured motion analysis, skeleton-based recognition heavily depends on the accuracy of the pose extractor and often requires an additional classifier for final action prediction. To combine complementary strengths, several studies [13] have explored multimodal action recognition, integrating video and skeleton information [45]. Also, researchers [70–74] who focus on frame-level semantic em-

phasis and attention-based mask modeling are employed to achieve high-fidelity alignment between linguistic cues and bodily dynamics. However, existing HAR frameworks have been developed primarily under normal illumination, leaving low-light recognition largely unexplored. In contrast, our DarkAct-Net represents the first RGB–thermal fusion framework specifically designed for robust human action recognition in low-light environments.

Recent advances in VLMs have opened new directions for action recognition, leveraging pretrained image–text representations. Some works [8, 9, 23, 25, 31] adapt VLMs to video domains through temporal modeling or prompt tuning, while others integrate semantic or structural cues such as human pose to enhance recognition or enable zero-shot prediction [66]. Despite these successes, existing VLM-based methods are developed primarily under well-lit, RGB-only conditions, lacking consideration for low-light or multimodal (RGB–thermal) environments. To our best knowledge, no prior VLM framework explicitly addresses action recognition through cross-modal RGB–T fusion in dark scenes.

3. DarkAct Dataset

3.1. Dataset Construction

Data Collection. Our data collection process was guided by the goal of recording paired RGB–thermal videos featuring realistic human actions under low-light conditions. We employed a *Dahua DH-TPC-BF2241* binocular camera, which can simultaneously capture visible-light and thermal-infrared modalities. The camera is fixed on a height-adjustable tripod, with a height range of 0.8m to 3m. The maximum elevation angles of the camera are $\pm 30°$.

We recruited 11 adult volunteers (7 male and 4 female) to perform a variety of actions. For action design, we referred to widely used normal-light datasets such as Kinetics [24], HMDB51 [27], ARID [63], and UCF101 [47], selecting 27 representative action categories that are common and practical in low-light indoor and outdoor environments. Light-dependent activities (e.g., outdoor ball sports and cycling) were excluded, while everyday human actions such as *walking*, *waving*, *crouching*, *sitting*, and *drinking* were emphasized to ensure realism and relevance to typical nighttime scenarios. The detailed action list is provided in the Appendix.

To ensure scene diversity, we selected a wide range of shooting locations, including both urban and rural areas as well as indoor and outdoor settings such as terraces, tree-lined paths, squares, corridors, staircases, meeting rooms, balconies, bedrooms, and activity rooms. These scenes cover multiple spatial scales and viewpoints, including eye-level, top-down, and low-angle perspectives at near, medium, and far distances.

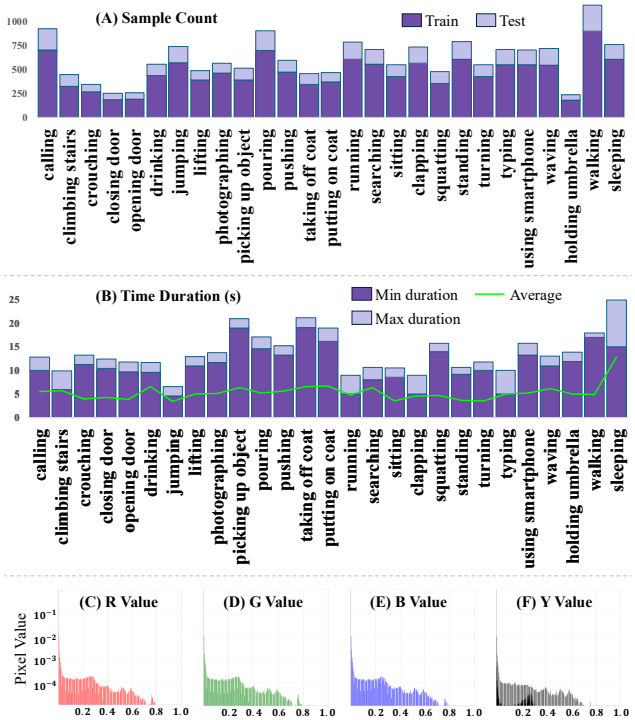

Figure 2. **Data statistics of the DarkAct dataset.** (A) Sample count for each action category, shown for both training and testing splits. (B) Distribution of video durations, including minimum, maximum, and average duration for each category. (C–F) Normalized pixel-value distributions for the R, G, B, and Y channels, respectively. These statistics highlight DarkAct's diverse action distribution and its inherently low-light characteristics, where most pixel intensities concentrate near zero.

The recordings were conducted during both sunny and rainy nights in central China. Filming sessions took place between 20:00 and 23:00, ensuring sufficiently dark outdoor environments. Due to the limited time window for night shooting, data collection spanned approximately two months (May and June).

Data Processing and Quality Control. After raw video collection, we implemented a customized and rigorous data processing and quality-control pipeline. First, a team was tasked with trimming videos to ensure complete action sequences. Paired RGB and thermal infrared streams were examined and adjusted to achieve precise frame-level synchronization. An independent third-party team subsequently audited and corrected the processed videos to further ensure data integrity and reliability. The entire process was highly labor-intensive, with a total human processing time exceeding 650 hours.

3.2. Data Statistics and Analysis

The DarkAct dataset contains 12,778 paired RGB–thermal video clips covering 27 action categories. Each clip in-

Dataset	#Cls	#Clips	Modalities	Illum.	Source	MS	MV	MD
UCF101 [47]	101	13,320	RGB	Normal	Online Video	✓	✓	×
HMDB51 [27]	51	6,849	RGB	Normal	Online Video, Film	✓	✓	×
Kinetics-400 [24]	400	254,380	RGB	Normal	YouTube	✓	✓	×
UAV-Human [29]	155	67,428	RGB+Skeleton+Thermal	Normal	UAV recording	✓	×	✓
MMACT [26]	35	36,764	RGB+Motion Sensors (Keypoints, Accel., Gyro, *etc.*)	Normal	Indoor recording	✓	✓	×
PKU-MMD [32]	51	1,076	RGB+Depth+Thermal+Keypoints	Normal	Indoor recording	×	×	×
ARID [63]	11	5,572	RGB	Low-light	In/outdoor recording	✓	×	×
DarkAct (ours)	27	12,778	RGB+Thermal	Low-light	In/outdoor recording	✓	✓	✓

Table 1. **Comparison of human action recognition datasets.** We compare representative datasets in terms of the number of classes and clips, sensing modalities, illumination conditions, and data sources. MS: Multi-Scene, MV: Multi-View, MD: Multi-Distance. DarkAct uniquely provides large-scale and high-quality RGB–thermal video pairs under low-light conditions, with diverse action acorss various scenes and viewpoints.

cludes precisely synchronized visible and thermal streams recorded at 30 fps. The dataset is divided into a training set of 9,040 paired videos and a test set of 3,738 paired videos.

Figure 2(A) shows the number of video clips per action class. To simulate realistic human behaviors in low-illumination environments, frequent daily actions such as *walking* and *calling* contain more samples, whereas less common nighttime activities such as *opening/closing doors* and *holding an umbrella* include fewer instances.

Figure 2(B) illustrates the distribution of video durations, which range from 4.5 to 19.1 seconds, with an average of approximately 5.4 seconds. The total duration exceeds 19.2 hours, forming a large-scale multimodal dataset suitable for training and evaluating deep learning models. The variation in clip length reflects differences in motion complexity and contextual dynamics among action categories.

Figures 2(C)–(F) present the distributions of R, G, B, and Y pixel intensities. The majority of pixel values are concentrated near zero, confirming that DarkAct captures diverse low-light scenes with varying illumination levels.

To the best of our knowledge, DarkAct is the first large-scale RGB–thermal dataset for HAR under low-light conditions. Table 1 compares DarkAct with existing popular HAR datasets. Most previous datasets were collected under normal illumination, while ARID [63], although recorded in dark environments, contains only RGB data and lacks multimodal diversity. In contrast, DarkAct provides paired RGB–thermal videos across multiple scenes and viewpoints, offering greater diversity and new challenges. From this perspective, DarkAct fills a critical gap and serves as a comprehensive benchmark for advancing multimodal HAR under adverse lighting conditions.

4. DarkAct-Net

This section introduces **DarkAct-Net**, an RGB–thermal fusion framework designed for robust HAR under adverse lighting conditions. The overall architecture is illustrated in Figure 3. DarkAct-Net follows a Transformer-based design, and we adopt MViTv2 [30] as the backbone owing to its strong performance and scalability (see Table 2).

Given a paired RGB–thermal video, each modality is first processed by a separate embedding branch to extract modality-specific features. A **Motion-Aware Attention** (MAA) module is then applied to capture human-centric motion-salient regions, emphasizing dynamic foreground areas. The modality-specific embeddings and their motion representations are subsequently fed into the Transformer backbone. At each stage, a **Light-Adaptive Fusion** (LAF) module enables adaptive cross-modal interaction according to illumination reliability. Finally, the fused representation from the last stage is forwarded to a classification head to predict the action category.

4.1. Motion-Aware Attention

The MAA module extracts human-centric, motion-salient regions, guiding the model to focus on behavioral cues while suppressing noisy or uninformative backgrounds. Moreover, to mitigate registration misalignment introduced by the binocular RGB–thermal camera and to ensure robust fusion in later stages (LAF in Section 4.2), MAA produces a spatial-tolerant attention map that is less sensitive to pixel-level misalignment. This is achieved through a customized attention operation $\mathrm{Att}(E^Q, (E^S)^\top, E^S)$, where the the *temporal motion saliency* E^S and *spatial-tolerant query* E^Q are constructed as follows.

Temporal Motion Saliency. For each modality, given the encoded modal-specific feature $\mathbf{G} \in \mathbb{R}^{C\times T\times H\times W}$, we first compute temporal differences between consecutive frames to highlight dynamic regions:

$$\Delta_t(i,j) = \mathcal{N}\big(\big|\sin\big(\mathbf{G}_t(i,j) - \mathbf{G}_{t-1}(i,j)\big)\big|\big)\,, \quad (1)$$

where t is the frame index, (i,j) denotes the spatial coordinate, and $\mathcal{N}(\cdot)$ denotes frame-wise normalization. The sine mapping enhances local contrast in subtle temporal variations. The resulting motion maps are passed through an

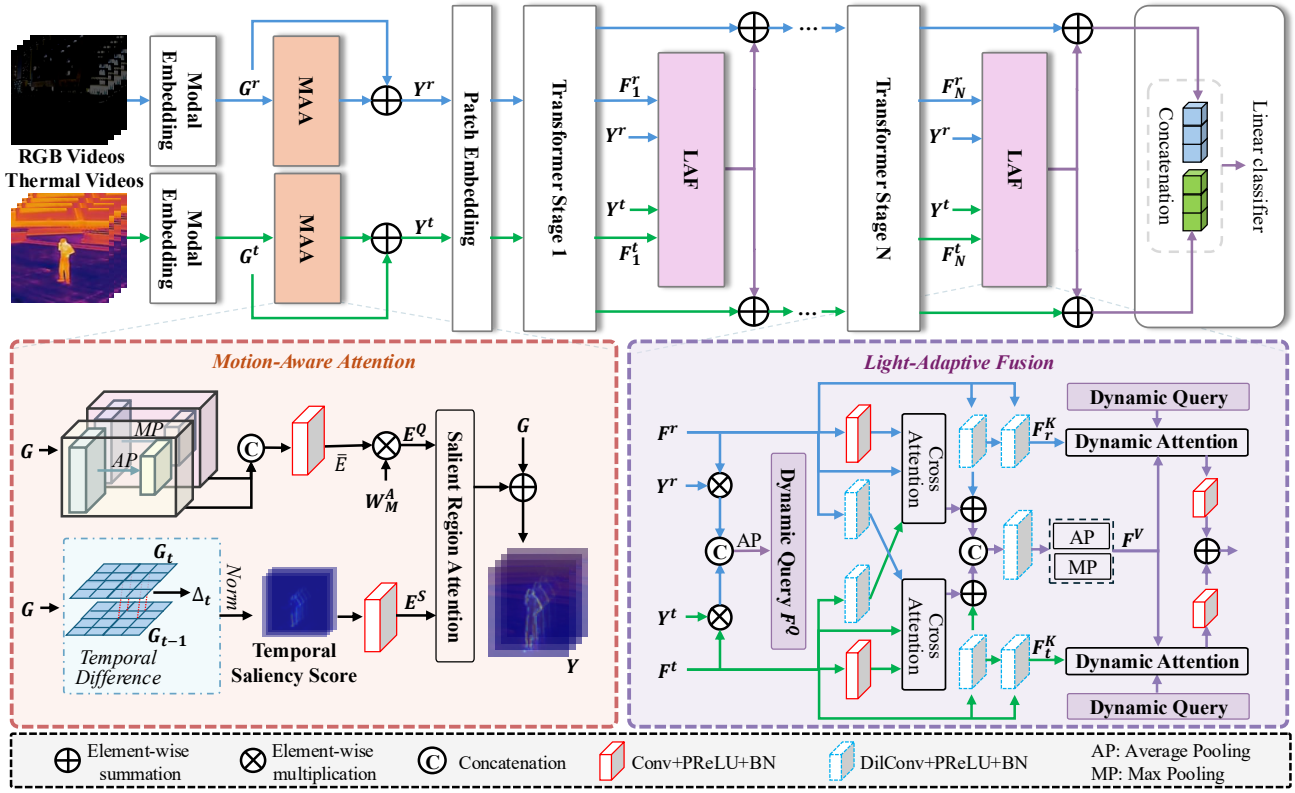

Figure 3. **Overview of the DarkAct-Net architecture.** The input RGB and thermal videos are first embedded and independently processed by the proposed *Motion-Aware Attention (MAA)* module, which highlights human-centric and motion-salient regions through temporal differences and salient-region attention. The enhanced features are passed into a multi-stage Transformer, where the proposed *Light-Adaptive Fusion (LAF)* module adaptively integrates RGB and thermal representations based on scene illumination and modality reliability using dynamic query and cross-attention mechanisms. The fused features are concatenated for final action prediction.

MLP to produce the temporal saliency map E^S. For boundary consistency, we compute the difference between the first and last frames and append it to preserve the temporal dimension T.

Spatial-Tolerant Query. Since RGB and thermal streams are not perfectly pixel-aligned, we construct a spatial-tolerant query representation that is robust to cross-modal misalignment. The modality feature $\mathbf{G}$ is processed by both max-pooling and average-pooling layers, and their outputs are concatenated along the channel dimension and fed into an MLP for dimensionality reduction: $\bar{E} = \mathrm{MLP}([\mathrm{MaxPool}(\mathbf{G}); \mathrm{AvgPool}(\mathbf{G})])$. A learnable mapping matrix W_M^A is then applied to produce the query embedding:

$$E^Q = \bar{E}\, W_M^A. \tag{2}$$

Finally, given the feature tensors E^Q, $E^S \in \mathbb{R}^{C\times N}$ (with $N = H \times W$), we perform attention along the channel dimension:

$$Y = \mathrm{Softmax}\left(\frac{E^Q (E^S)^\top}{\sqrt{C}}\right) E^S. \tag{3}$$

This operation models inter-channel dependencies, emphasizing motion-discriminative channels while suppressing redundant or noisy responses. The resulting feature Y provides a robust representation for subsequent fusion.

4.2. Light-Adaptive Fusion

The MAA modules output motion-enhanced features Y^r and Y^t for the RGB and thermal inputs, respectively. These features are then fed into the Transformer backbone, producing stage outputs F^r and F^t. Each pair (F^r, F^t) is subsequently passed to a Light-Adaptive Fusion (LAF) module, which adaptively fuses RGB and thermal representations according to illumination conditions for robust recognition. An LAF block is inserted after each Transformer stage to aggregate complementary cues from both modalities through a dynamic fusion attention mechanism $\mathrm{Att}(F^Q, F^K, F^V)$. The construction of the query, key, and value is described below.

Light-Adaptive Query. The fused query $F^Q \in \mathbb{R}^{C\times N}$ is obtained by combining motion-enhanced and stage fea-

tures from both modalities:

$$F^Q = \phi\left([Y^r \odot F^r; Y^t \odot F^t,]\right), \tag{4}$$

where $\odot$ denotes element-wise multiplication, $[\cdot;\cdot]$ denotes channel-wise concatenation, and $\phi(\cdot)$ is a light-weight mapping subnetwork (details in the Appendix). This query encodes motion saliency and illumination cues during multimodal fusion.

Modality-Specific Keys. For each modality, the key representation $F^K_{r/t} \in \mathbb{R}^{C\times N}$ is obtained by applying a shallow convolutional block consisting of a 3×3 dilated convolution and a Sigmoid activation:

$$F^K_{r/t} = \mathrm{ConvBlock}(F^{r/t}). \tag{5}$$

This operation captures modality-specific structural information and local illumination variations.

Cross-Modal Value. To obtain the value representation F^V, we first perform cross-attention between RGB and thermal features: $F^r_A = \mathrm{Att}(F^r, F^r, F^t)$, $F^t_A = \mathrm{Att}(F^t, F^t, F^r)$, where each branch uses self-modal query–key pairs and the opposite modality as the value. The resulting cross-enhanced features F^r_A, F^t_A are concatenated and passed through hierarchical pooling followed by an MLP:

$$F^V = \mathrm{MLP}\left([\mathrm{MaxPool}(F_A); \mathrm{AvgPool}(F_A)]\right), \tag{6}$$

where $F_A = [F^r_A; F^t_A]$. This produces the multimodal value $F^V \in \mathbb{R}^{C\times N}$.

The final light-adaptive attention for each modality is computed as:

$$F^{r/t}_d = \mathrm{Softmax}\left(\frac{F^Q (F^K_{r/t})^\top}{\sqrt{C}}\right) F^V. \tag{7}$$

The outputs F^r_d and F^t_d are refined through separate MLP layers and then summed to obtain the fused feature:

$$F_{\mathrm{LAF}} = \mathrm{MLP}(F^r_d) + \mathrm{MLP}(F^t_d). \tag{8}$$

Finally, F_{LAF} is added to the Transformer stage output via a residual connection and used as input to the next stage.

For classification, the output features of each modality from the final Transformer stage are flattened and concatenated, followed by a linear classifier that predicts the action category. The network is trained using the standard cross-entropy loss.

5. Experiments

5.1. Experimental Setups

Baseline Models. We comprehensively benchmark well-established and state-of-the-art approaches on the proposed *DarkAct* dataset, covering three categories: (1) *Unimodal HAR methods* that operate on a single RGB or thermal stream, including classical CNN-based [7, 16, 18, 52, 53, 57] and recent Transformer-based models [5, 22, 28, 30, 36–38, 40, 46, 55, 58, 65]. (2) *Multimodal fusion methods* that integrate information from multiple input sources, including existing multi-modal fusion frameworks [14, 34, 42, 64, 67, 69, 75, 76], as well as our proposed *DarkAct-Net*. (3) *Visual foundation models* capable of video understanding [2, 41, 43, 48, 49, 51]. These models are evaluated in a zero-shot setting to assess their generalization under dark environments. Please refer to the appendix for more details.

Implementation Details. All experiments are implemented on a dual-GPU NVIDIA RTX A800 (80 GB) server. We adopt the AdamW [39] optimizer with weight decay $5e-3$ with a two-stage learning schedule. The network is first warmed up for 20 epochs, followed by 100 training epochs using a cosine-annealing learning-rate schedule that decays from $1e-3$ to $1e-4$. The batch size is set to 8. Additional details are provided in the appendix.

Evaluation Criteria. Model performance is reported using Top-1 and Top-5 classification accuracy. For VLMs, we report only Top-1 accuracy due to zero-shot testing.

5.2. Main Results

Table 2 summarizes the performance of unimodal and multimodal methods on the proposed *DarkAct* dataset. Several key observations can be drawn as follows.

DarkAct poses significant challenges for existing models. The best unimodal performance reaches only 62.1% Top-1 accuracy for RGB (Conv2Former) and 69.1% for thermal (MViTv2-B). These results reveal that current models struggle to recognize actions under low-light conditions, highlighting the difficulty of DarkAct. This finding confirms the necessity of developing more light-robust methods and validates DarkAct as a challenging new benchmark for future research.

Thermal modality is crucial, while fusion remains non-trivial. Across all architectures, models trained on thermal data clearly outperform their RGB counterparts by large margins, demonstrating the critical role of thermal sensing for action recognition in the dark. However, most multimodal fusion methods underperform compared with the single-modality methods. We attribute this to the fact that current multimodal frameworks are generally designed for different sensors or tasks, while adverse light conditions in DarkAct further raises the difficulty. This observation underscores the need for new fusion mechanisms that can effectively handle heterogeneous signals under adverse illumination.

DarkAct-Net achieves state-of-the-art performance. Our proposed DarkAct-Net, the first baseline tailored for multimodal fusion in low-light HAR, achieves the best overall

Model	Publication	Pretrained	Backbone	RGB		Thermal		Multimodal fusion	
				Top-1	Top-5	Top-1	Top-5	Top-1	Top-5
Uni-modal Recognition									
C3D [52]	ICCV 2015	UCF101	C3D	52.3	78.9	58.3	82.4	–	–
TSN [57]	ECCV 2016	Kinetics-400	ResNet50	50.1	74.3	59.9	88.7	–	–
I3D [7]	CVPR 2017	Kinetics-400	ResNet50	48.5	74.1	64.1	**91.0**	–	–
R(2+1)D [53]	CVPR 2018	Kinetics-400	ResNet50	44.9	74.2	56.7	84.2	–	–
SlowFast [18]	ICCV 2019	Kinetics-400	ResNet50	37.7	73.9	46.6	86.3	–	–
X3D [16]	CVPR 2020	Kinetics-400	X3D	40.4	68.8	55.0	**90.9**	–	–
TimeSformer [5]	ICML 2021	Kinetics-400	ViT-B	49.6	82.3	63.1	89.5	–	–
SwinT-B [36]	ICCV 2021	Imagenet-21K	SwinT-B	59.6	**85.5**	62.6	83.3	–	–
UniFormer v2 [28]	ICLR 2022	Kinetics-400	MViTv2-B	29.5	41.8	47.9	78.9	–	–
MViTv2-B [30]	CVPR 2022	Kinetics-400	MViTv2-B	57.1	83.9	**69.1**	90.5	–	–
ConvNeXt [37]	CVPR 2022	Imagenet-21K	ConvNeXt	60.7	78.1	**64.4**	85.7	–	–
VideoSwin [38]	CVPR 2022	Kinetics-400	Swin-B	51.6	**85.9**	63.9	**91.7**	–	–
VideoMAE v2 [58]	CVPR 2023	Kinetics-400	ViT-B	51.8	84.8	56.5	87.9	–	–
MaxViT [55]	CVPR 2023	Imagenet-21K	MaxViT	57.6	81.5	58.1	75.5	–	–
TransNeXt [46]	CVPR 2024	Imagenet-21K	TransNeXt	**61.1**	83.2	63.1	78.7	–	–
SHViT [65]	CVPR 2024	Imagenet-21K	SHViT	60.9	83.2	61.6	85.9	–	–
Conv2Former [22]	TPAMI 2024	Imagenet-21K	Conv2Former	**62.1**	84.1	63.9	83.9	–	–
OverLoCk [40]	CVPR 2025	Imagenet-21K	OverLoCk	**61.5**	**85.1**	**64.7**	90.7	–	–
Multi-modal Recognition									
CMX [69]	TITS 2022	*random init.*	MiT-B0	–	–	–	–	**52.6**	**76.6**
EGFNet [14]	AAAI 2022	*random init.*	Resnet152	–	–	–	–	41.0	67.2
CDDFuse [76]	CVPR 2023	*random init.*	Restormer	–	–	–	–	34.8	52.1
SegMiF [34]	ICCV 2023	*random init.*	MiT-B1	–	–	–	–	42.4	68.0
FTransUNet [42]	TGRS 2024	*random init.*	ViT-B	–	–	–	–	39.8	54.9
MRFS [67]	CVPR 2024	*random init.*	MiT-B0	–	–	–	–	**52.7**	**74.2**
CFFormer [75]	TGRS 2025	*random init.*	MiT-B2	–	–	–	–	45.9	68.5
DFormerv2 [64]	CVPR 2025	*random init.*	DFormerv2-B	–	–	–	–	51.1	73.7
DarkAct-Net (Ours)	–	*random init.*	MViTv2-B	–	–	–	–	**74.4**	**92.9**

Table 2. **Comparison of uni-modal and multi-modal action recognition methods on the DarkAct dataset.** We evaluate a wide range of RGB-only, thermal-only, and multimodal fusion approaches. Top-1 and Top-5 accuracies are reported for each modality configuration. Models achieving the best performance in each column are highlighted in red, and the second-best results are shown in blue. DarkAct-Net achieves the strongest overall performance in multimodal recognition under low-light conditions.

performance among all unimodal and multimodal competitors. Its design, combining motion-aware and illumination-adaptive fusion, proves effective for leveraging complementary RGB–thermal cues and sets a strong baseline for future research on multimodal perception under adverse lighting conditions.

5.3. Benchmarking VLMs on DarkAct

We further evaluate recent VLMs using RGB, thermal, and combined RGB–thermal inputs to assess their recognition capabilities under low-light conditions. The results are summarized in Table 3. We see consistent trends that thermal inputs outperform RGB, while multimodal RGB–thermal inputs achieve the highest accuracy among the three settings.

Surprisingly, despite their strong generalization ability on many tasks, all evaluated VLMs obtain less than 20% Top-1 accuracy across all input modalities on DarkAct. These results reveal severe performance degradation and demonstrate that existing VLMs struggle to generalize under low-light and cross-spectral conditions. This highlights both the difficulty of DarkAct and the value of our dataset for driving AI research into illumination-robust multimodal understanding.

5.4. Ablation Study

We conduct ablation studies to assess the contribution of each component in DarkAct-Net. Table 4 reports multimodal performance for four model variants: (1) the full DarkAct-Net; (2) a variant without the MAA module, which processes raw video frames without motion-aware enhancement; (3) a variant without the LAF module, using direct multimodal feature concatenation; and (4) a baseline without both MAA and LAF, equivalent to a simple dual-stream Transformer.

Model	RGB	Thermal	Multimodal
Cosmos-Reason-7B [43]	4.2	8.7	11.3
LLaVA-Video-7B [33]	9.2	13.5	17.9
Gemma-3-12B-it [49]	6.9	9.6	9.4
Keye-VL-1.5-8B [50]	6.8	12.1	11.9
DeepSeek-vl-7B [41]	4.7	8.1	11.8
Qwen3-VL-7B [2]	6.6	17.9	18.1
Grok-3-Mini [62]	4.4	10.2	16.5
Gemini-2.5-Pro [48]	4.2	7.9	13.2
Claude 4.0 Sonnet [1]	4.9	6.2	10.1
GPT-5 [44]	7.1	15.2	17.9

Table 3. **Zero-shot performance of VLMs on the DarkAct dataset.** We report Top-1 accuracy (%) using RGB-only, thermal-only, and combined RGB–thermal inputs. All models exhibit substantial performance degradation under low-light conditions, indicating limited generalization of current VLMs to cross-spectral and low-illumination action recognition.

Model	Top1	Top5
DarkAct-Net (baseline)	74.4	92.9
w/o MAA	71.2	89.8
w/o LAF	72.3	88.4
w/o MAA + LAF	70.9	90.7

Table 4. **Ablation study of DarkAct-Net.** We report Top-1 and Top-5 accuracies after removing the MAA module, the LAF module, or both. Both components contribute substantially to overall performance, and removing both results in the largest degradation.

The results show that removing either MAA or LAF leads to a clear decrease in accuracy, indicating that both motion-aware representation and illumination-adaptive fusion are crucial for effective RGB–thermal learning. Eliminating both modules yields the lowest Top-1 accuracy, with a 3.5% drop compared with the full model, highlighting their complementary roles in achieving robust low-light action recognition.

5.5. Discussion

We further analyze how human–camera distance and camera viewpoint influence action recognition performance. To this end, we partition the DarkAct test set into three distance ranges (Far, Medium, Near) and three viewpoints (Upward, Eye-level, Downward), and evaluate multiple representative models under each condition. Following the comparisons in Table 2, we select the best-performing unimodal models (MViTv2-B for RGB-only and thermal-only inputs), the strongest multimodal baseline (CMX), and our proposed DarkAct-Net. The Top-1 accuracies for each group are shown in Figure 4.

Across all models, performance decreases consistently as the subject moves farther from the camera. This trend is expected: under low-light conditions, distant humans appear smaller, blurrier, and exhibit weaker structural cues,

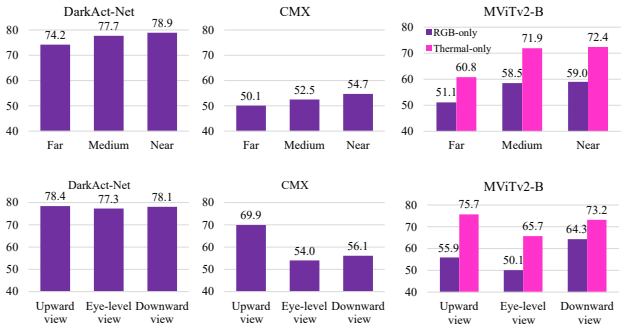

Figure 4. **Performance comparison across distances and viewpoints on DarkAct.**

making recognition inherently more difficult.

In contrast, viewpoint variation produces different behaviors. Existing unimodal and multimodal models exhibit noticeable fluctuations across viewpoints, with upward-view generally performing best and eye-level-view performing worst. These inconsistencies suggest that current architectures are sensitive to viewpoint-induced changes in human shape and motion appearance. In comparison, DarkAct-Net demonstrates strong robustness to viewpoint changes, maintaining nearly uniform accuracy across all three viewpoints. This indicates that the proposed motion-aware and illumination-adaptive fusion mechanisms enable the model to extract stable human-centric features despite geometric or pose-related variations. Overall, these analyses highlight the challenges posed by distance and viewpoint in low-light HAR and further validate the robustness and generalization ability of DarkAct-Net.

6. Conclusion

In this study, we presented DarkAct, a large-scale and high-quality RGB–thermal video dataset specifically designed for human action recognition under low-illumination conditions. We further proposed DarkAct-Net, a novel RGB–thermal fusion framework that enhances human-centric representation and adaptively integrates cross-modal information through the proposed Motion-Aware Attention (MAA) and Light-Adaptive Fusion (LAF) modules, achieving robust performance across diverse lighting environments. Comprehensive benchmarking of unimodal, multimodal, and foundation models demonstrates that DarkAct introduces substantial challenges for existing methods, revealing the limitations of current visual understanding systems in dark conditions. Moreover, DarkAct-Net consistently outperforms state-of-the-art single-modality, multimodal, and foundation models on this benchmark. We hope that our work will serve as a valuable benchmark and catalyst for future research on robust multimodal perception and understanding in challenging visual environments.

Acknowledgements

This work was supported by the NSFC Regional Innovation and Development Joint Fund under Grant U25A20537, the National Key Research and Development Program of China No. 2024YFC3015600.

References

[1] Anthropic. Claude sonnet 4, 2025. Large language model – part of the Claude 4 series.

[2] Shuai Bai and Keqin Chen et al. Qwen2.5-vl technical report, 2025.

[3] Fabien Baradel, Christian Wolf, Julien Mille, and Graham W Taylor. Glimpse clouds: Human activity recognition from unstructured feature points. In *Proceedings of the IEEE conference on computer vision and pattern recognition*, pages 469–478, 2018.

[4] Yizhak Ben-Shabat, Oren Shrout, and Stephen Gould. 3dinaction: Understanding human actions in 3d point clouds. In *Proceedings of the IEEE/CVF Conference on Computer Vision and Pattern Recognition*, pages 19978–19987, 2024.

[5] Gedas Bertasius, Heng Wang, and Lorenzo Torresani. Is space-time attention all you need for video understanding? In *Proceedings of the 38th International Conference on Machine Learning*, 2021.

[6] Jinmiao Cai, Nianjuan Jiang, Xiaoguang Han, Kui Jia, and Jiangbo Lu. Jolo-gcn: mining joint-centered light-weight information for skeleton-based action recognition. In *Proceedings of the IEEE/CVF winter conference on applications of computer vision*, pages 2735–2744, 2021.

[7] Joao Carreira and Andrew Zisserman. Quo vadis, action recognition? a new model and the kinetics dataset. In *Proceedings of the IEEE Conference on Computer Vision and Pattern Recognition (CVPR)*, 2017.

[8] Dibyadip Chatterjee, Fadime Sener, Shugao Ma, and Angela Yao. Opening the vocabulary of egocentric actions. *Advances in Neural Information Processing Systems*, 36: 33174–33187, 2023.

[9] Yifei Chen, Dapeng Chen, Ruijin Liu, Hao Li, and Wei Peng. Video action recognition with attentive semantic units. In *Proceedings of the IEEE/CVF International Conference on Computer Vision*, pages 10170–10180, 2023.

[10] Zengzhao Chen, Jiawen Li, Hai Liu, Xuyang Wang, Hu Wang, and Qiuyu Zheng. Learning multi-scale features for speech emotion recognition with connection attention mechanism. *Expert Systems with Applications*, 214:118943, 2023.

[11] Ke Cheng, Yifan Zhang, Xiangyu He, Weihan Chen, Jian Cheng, and Hanqing Lu. Skeleton-based action recognition with shift graph convolutional network. In *Proceedings of the IEEE/CVF conference on computer vision and pattern recognition*, pages 183–192, 2020.

[12] Shihao Cheng, Jinlu Zhang, Yue Liu, Aoran Xiao, and Zhigang Tu. Owlsight: A robust illumination adaptation framework for dark video human action recognition. *IEEE Transactions on Circuits and Systems for Video Technology*, pages 1–1, 2025.

[13] Srijan Das, Saurav Sharma, Rui Dai, Francois Bremond, and Monique Thonnat. Vpn: Learning video-pose embedding for activities of daily living. In *European conference on computer vision*, pages 72–90. Springer, 2020.

[14] Shaohua Dong, Wujie Zhou, Caie Xu, and Weiqing Yan. Egfnet: Edge-aware guidance fusion network for rgb–thermal urban scene parsing. *IEEE Transactions on Intelligent Transportation Systems*, 25(1):657–669, 2024.

[15] Haodong Duan, Yue Zhao, Kai Chen, Dahua Lin, and Bo Dai. Revisiting skeleton-based action recognition. In *Proceedings of the IEEE/CVF conference on computer vision and pattern recognition*, pages 2969–2978, 2022.

[16] Christoph Feichtenhofer. X3d: Expanding architectures for efficient video recognition. In *Proceedings of the IEEE/CVF Conference on Computer Vision and Pattern Recognition (CVPR)*, 2020.

[17] Christoph Feichtenhofer, Axel Pinz, and Richard P Wildes. Spatiotemporal multiplier networks for video action recognition. In *Proceedings of the IEEE conference on computer vision and pattern recognition*, pages 4768–4777, 2017.

[18] Christoph Feichtenhofer, Haoqi Fan, Jitendra Malik, and Kaiming He. Slowfast networks for video recognition. In *Proceedings of the IEEE/CVF International Conference on Computer Vision (ICCV)*, 2019.

[19] Chenqiang Gao, Yinhe Du, Jiang Liu, Jing Lv, Luyu Yang, Deyu Meng, and Alexander G. Hauptmann. Infar dataset: Infrared action recognition at different times. *Neurocomputing*, 212:36–47, 2016.

[20] Raghav Goyal, Samira Ebrahimi Kahou, Vincent Michalski, Joanna Materzynska, Susanne Westphal, Heuna Kim, Valentin Haenel, Ingo Fruend, Peter Yianilos, Moritz Mueller-Freitag, Florian Hoppe, Christian Thurau, Ingo Bax, and Roland Memisevic. The "something something" video database for learning and evaluating visual common sense. In *Proceedings of the IEEE International Conference on Computer Vision (ICCV)*, 2017.

[21] Chunhui Gu, Chen Sun, David A. Ross, Carl Vondrick, Caroline Pantofaru, Yeqing Li, Sudheendra Vijayanarasimhan, George Toderici, Susanna Ricco, Rahul Sukthankar, Cordelia Schmid, and Jitendra Malik. Ava: A video dataset of spatio-temporally localized atomic visual actions. In *2018 IEEE/CVF Conference on Computer Vision and Pattern Recognition*, 2018.

[22] Qibin Hou, Cheng-Ze Lu, Ming-Ming Cheng, and Jiashi Feng. Conv2former: A simple transformer-style convnet for visual recognition. *IEEE Transactions on Pattern Analysis and Machine Intelligence*, 46(12):8274–8283, 2024.

[23] Chen Ju, Tengda Han, Kunhao Zheng, Ya Zhang, and Weidi Xie. Prompting visual-language models for efficient video understanding. In *European conference on computer vision*, pages 105–124. Springer, 2022.

[24] Will Kay, Joao Carreira, Karen Simonyan, Brian Zhang, Chloe Hillier, Sudheendra Vijayanarasimhan, Fabio Viola, Tim Green, Trevor Back, Paul Natsev, Mustafa Suleyman, and Andrew Zisserman. The kinetics human action video dataset.

[25] Minji Kim, Dongyoon Han, Taekyung Kim, and Bohyung Han. Leveraging temporal contextualization for video action

recognition. In *European Conference on Computer Vision*, pages 74–91. Springer, 2024.

[26] Quan Kong, Ziming Wu, Ziwei Deng, Martin Klinkigt, Bin Tong, and Tomokazu Murakami. Mmact: A large-scale dataset for cross modal human action understanding. In *2019 IEEE/CVF International Conference on Computer Vision (ICCV)*, 2019.

[27] Hilde Kuehne, Hueihan Jhuang, Estibaliz Garrote, Tomaso Poggio, and Thomas Serre. Hmdb51: A large video database for human motion recognition. In *Proceedings of the IEEE International Conference on Computer Vision*, 2011.

[28] Kunchang Li, Yali Wang, Yinan He, Yizhuo Li, Yi Wang, Limin Wang, and Yu Qiao. Uniformerv2: Unlocking the potential of image vits for video understanding. In *Proceedings of the IEEE/CVF International Conference on Computer Vision (ICCV)*, pages 1632–1643, 2023.

[29] Tianjiao Li, Jun Liu, Wei Zhang, Yun Ni, Wenqian Wang, and Zhiheng Li. Uav-human: A large benchmark for human behavior understanding with unmanned aerial vehicles. In *2021 IEEE/CVF Conference on Computer Vision and Pattern Recognition (CVPR)*, pages 16261–16270, 2021.

[30] Yanghao Li, Chao-Yuan Wu, Haoqi Fan, Karttikeya Mangalam, Bo Xiong, Jitendra Malik, and Christoph Feichtenhofer. Mvitv2: Improved multiscale vision transformers for classification and detection. In *2022 IEEE/CVF Conference on Computer Vision and Pattern Recognition (CVPR)*, pages 4794–4804, 2022.

[31] Wei Lin, Leonid Karlinsky, Nina Shvetsova, Horst Possegger, Mateusz Kozinski, Rameswar Panda, Rogerio Feris, Hilde Kuehne, and Horst Bischof. Match, expand and improve: Unsupervised finetuning for zero-shot action recognition with language knowledge. In *Proceedings of the IEEE/CVF international conference on computer vision*, pages 2851–2862, 2023.

[32] Chunhui Liu, Yueyu Hu, Yanghao Li, Sijie Song, and Jiaying Liu. Pku-mmd: A large scale benchmark for skeleton-based human action understanding. In *Proceedings of the Workshop on Visual Analysis in Smart and Connected Communities*, 2017.

[33] Haotian Liu, Chunyuan Li, Yuheng Li, Bo Li, Yuanhan Zhang, Sheng Shen, and Yong Jae Lee. Llava-next: Improved reasoning, ocr, and world knowledge, 2024.

[34] Jinyuan Liu, Zhu Liu, Guanyao Wu, Long Ma, Risheng Liu, Wei Zhong, Zhongxuan Luo, and Xin Fan. Multi-interactive feature learning and a full-time multi-modality benchmark for image fusion and segmentation. In *2023 IEEE/CVF International Conference on Computer Vision (ICCV)*, pages 8081–8090, 2023.

[35] Xin Liu, Silvia L Pintea, Fatemeh Karimi Nejadasl, Olaf Booij, and Jan C Van Gemert. No frame left behind: Full video action recognition. In *Proceedings of the IEEE/CVF conference on computer vision and pattern recognition*, pages 14892–14901, 2021.

[36] Ze Liu, Yutong Lin, Yue Cao, Han Hu, Yixuan Wei, Zheng Zhang, Stephen Lin, and Baining Guo. Swin transformer: Hierarchical vision transformer using shifted windows. In *2021 IEEE/CVF International Conference on Computer Vision (ICCV)*, 2021.

[37] Zhuang Liu, Hanzi Mao, Chao-Yuan Wu, Christoph Feichtenhofer, Trevor Darrell, and Saining Xie. A convnet for the 2020s. In *2022 IEEE/CVF Conference on Computer Vision and Pattern Recognition (CVPR)*, 2022.

[38] Ze Liu, Jia Ning, Yue Cao, Yixuan Wei, Zheng Zhang, Stephen Lin, and Han Hu. Video swin transformer. In *Proceedings of the IEEE/CVF Conference on Computer Vision and Pattern Recognition (CVPR)*, 2022.

[39] Ilya Loshchilov and Frank Hutter. Decoupled weight decay regularization, 2019.

[40] Meng Lou and Yizhou Yu. Overlock: An overview-first-look-closely-next convnet with context-mixing dynamic kernels. In *Proceedings of the IEEE/CVF Conference on Computer Vision and Pattern Recognition (CVPR)*, 2025.

[41] Haoyu Lu, Wen Liu, Bo Zhang, Bingxuan Wang, Kai Dong, Bo Liu, Jingxiang Sun, Tongzheng Ren, Zhuoshu Li, Hao Yang, Yaofeng Sun, Chengqi Deng, Hanwei Xu, Zhenda Xie, and Chong Ruan. Deepseek-vl: Towards real-world vision-language understanding, 2024.

[42] Xianping Ma, Xiaokang Zhang, Man-On Pun, and Ming Liu. A multilevel multimodal fusion transformer for remote sensing semantic segmentation. *IEEE Transactions on Geoscience and Remote Sensing*, 62:1–15, 2024.

[43] NVIDIA, :, Alisson Azzolini, Junjie Bai, Hannah Brandon, and et al. Cosmos-reason1: From physical common sense to embodied reasoning, 2025.

[44] OpenAI. Gpt-5. `https://openai.com/zh-Hans-CN/gpt-5/`, 2025. Large language model by OpenAI.

[45] Amir Shahroudy, Jun Liu, Tian-Tsong Ng, and Gang Wang. Ntu rgb+d: A large scale dataset for 3d human activity analysis. In *2016 IEEE Conference on Computer Vision and Pattern Recognition (CVPR)*, pages 1010–1019, 2016.

[46] Dai Shi. Transnext: Robust foveal visual perception for vision transformers. In *Proceedings of the IEEE/CVF Conference on Computer Vision and Pattern Recognition (CVPR)*, 2024.

[47] Khurram Soomro, Amir Roshan Zamir, and Mubarak Shah. UCF101: A dataset of 101 human actions classes from videos in the wild.

[48] Gemini Team, Rohan Anil, Sebastian Borgeaud, and et al. Gemini: A family of highly capable multimodal models, 2025.

[49] Gemma Team, Aishwarya Kamath, Johan Ferret, and et al. Gemma 3 technical report, 2025.

[50] Kwai Keye Team. Kwai keye-vl 1.5 technical report, 2025.

[51] Hugo Touvron, Thibaut Lavril, Gautier Izacard, Xavier Martinet, Marie-Anne Lachaux, Timothée Lacroix, Baptiste Rozière, Naman Goyal, Eric Hambro, Faisal Azhar, Aurelien Rodriguez, Armand Joulin, Edouard Grave, and Guillaume Lample. Llama: Open and efficient foundation language models, 2023.

[52] Du Tran, Lubomir Bourdev, Rob Fergus, Lorenzo Torresani, and Manohar Paluri. Learning spatiotemporal features with 3d convolutional networks. In *2015 IEEE International Conference on Computer Vision (ICCV)*, 2015.

[53] Du Tran, Heng Wang, Lorenzo Torresani, Jamie Ray, Yann LeCun, and Manohar Paluri. A closer look at spatiotemporal

convolutions for action recognition. In *Proceedings of the IEEE Conference on Computer Vision and Pattern Recognition (CVPR)*, 2018.

[54] Du Tran, Heng Wang, Lorenzo Torresani, Jamie Ray, Yann LeCun, and Manohar Paluri. A closer look at spatiotemporal convolutions for action recognition. In *Proceedings of the IEEE conference on Computer Vision and Pattern Recognition*, pages 6450–6459, 2018.

[55] Zhengzhong Tu, Hossein Talebi, Han Zhang, Feng Yang, Peyman Milanfar, Alan Conrad Bovik, and Yinxiao Li. Maxvit: Multi-axis vision transformer. In *European Conference on Computer Vision*, 2022.

[56] Zhigang Tu, Jiaxu Zhang, Hongyan Li, Yujin Chen, and Junsong Yuan. Joint-bone fusion graph convolutional network for semi-supervised skeleton action recognition. *IEEE Transactions on Multimedia*, 25:1819–1831, 2022.

[57] Limin Wang, Yuanjun Xiong, Zhe Wang, Yu Qiao, Dahua Lin, Xiaoou Tang, and Luc Van Gool. Temporal segment networks for action recognition in videos. *IEEE Transactions on Pattern Analysis and Machine Intelligence*, 41(11): 2740–2755, 2019.

[58] Limin Wang, Bingkun Huang, Zhiyu Zhao, Zhan Tong, Yinan He, Yi Wang, Yali Wang, and Yu Qiao. Videomae v2: Scaling video masked autoencoders with dual masking. In *Proceedings of the IEEE/CVF Conference on Computer Vision and Pattern Recognition (CVPR)*, 2023.

[59] Yunbo Wang, Mingsheng Long, Jianmin Wang, and Philip S Yu. Spatiotemporal pyramid network for video action recognition. In *Proceedings of the IEEE conference on Computer Vision and Pattern Recognition*, pages 1529–1538, 2017.

[60] Zhengwei Wang, Qi She, and Aljosa Smolic. Action-net: Multipath excitation for action recognition. In *Proceedings of the IEEE/CVF conference on computer vision and pattern recognition*, pages 13214–13223, 2021.

[61] Zhifeng Wang, Minghui Wang, Chunyan Zeng, and Longlong Li. Scb-detr: Multiscale deformable transformers for occlusion-resilient student learning behavior detection in smart classroom. *IEEE Transactions on Computational Social Systems*, 12(6):4979–4998, 2025.

[62] xAI. Grok 3 mini, 2025. Large-language model.

[63] Yuecong Xu, Jianfei Yang, Haozhi Cao, Kezhi Mao, Jianxiong Yin, and Simon See. *ARID: A New Dataset for Recognizing Action in the Dark*, pages 70–84. 2021.

[64] Bo-Wen Yin, Jiao-Long Cao, Ming-Ming Cheng, and Qibin Hou. Dformerv2: Geometry self-attention for rgbd semantic segmentation. In *2025 IEEE/CVF Conference on Computer Vision and Pattern Recognition (CVPR)*, 2025.

[65] Seokju Yun and Youngmin Ro. Shvit: Single-head vision transformer with memory efficient macro design. In *2024 IEEE/CVF Conference on Computer Vision and Pattern Recognition (CVPR)*, 2024.

[66] Haosong Zhang, Mei Chee Leong, Liyuan Li, and Weisi Lin. Pevl: Pose-enhanced vision-language model for fine-grained human action recognition. In *Proceedings of the IEEE/CVF Conference on Computer Vision and Pattern Recognition*, pages 18857–18867, 2024.

[67] Hao Zhang, Xuhui Zuo, Jie Jiang, Chunchao Guo, and Jiayi Ma. Mrfs: Mutually reinforcing image fusion and segmentation. In *2024 IEEE/CVF Conference on Computer Vision and Pattern Recognition (CVPR)*, 2024.

[68] Jiaxu Zhang, Yifan Jia, Wei Xie, and Zhigang Tu. Zoom transformer for skeleton-based group activity recognition. *IEEE Transactions on Circuits and Systems for Video Technology*, 32(12):8646–8659, 2022.

[69] Jiaming Zhang, Huayao Liu, Kailun Yang, Xinxin Hu, Ruiping Liu, and Rainer Stiefelhagen. Cmx: Cross-modal fusion for rgb-x semantic segmentation with transformers. *IEEE Transactions on Intelligent Transportation Systems*, 24(12): 14679–14694, 2023.

[70] Jiaxu Zhang, Junwu Weng, Di Kang, Fang Zhao, Shaoli Huang, Xuefei Zhe, Linchao Bao, Ying Shan, Jue Wang, and Zhigang Tu. Skinned motion retargeting with residual perception of motion semantics & geometry. In *Proceedings of the IEEE/CVF Conference on Computer Vision and Pattern Recognition*, pages 13864–13872, 2023.

[71] Jiaxu Zhang, Zhigang Tu, Junwu Weng, Junsong Yuan, and Bo Du. A modular neural motion retargeting system decoupling skeleton and shape perception. *IEEE Transactions on Pattern Analysis and Machine Intelligence*, 46(10):6889–6904, 2024.

[72] Jiaxu Zhang, Xianfang Zeng, Xin Chen, Wei Zuo, Gang Yu, and Zhigang Tu. Mikudance: Animating character art with mixed motion dynamics. In *Proceedings of the IEEE/CVF International Conference on Computer Vision*, pages 19689–19699, 2025.

[73] Xiangyue Zhang, Jianfang Li, Jiaxu Zhang, Ziqiang Dang, Jianqiang Ren, Liefeng Bo, and Zhigang Tu. Semtalk: Holistic co-speech motion generation with frame-level semantic emphasis. In *Proceedings of the IEEE/CVF International Conference on Computer Vision (ICCV)*, pages 13761–13771, 2025.

[74] Xiangyue Zhang, Jianfang Li, Jiaxu Zhang, Jianqiang Ren, Liefeng Bo, and Zhigang Tu. Echomask: Speech-queried attention-based mask modeling for holistic co-speech motion generation. In *Proceedings of the 33rd ACM International Conference on Multimedia*, page 10827–10836, New York, NY, USA, 2025. Association for Computing Machinery.

[75] Jinqi Zhao, Ming Zhang, Zhonghuai Zhou, Zixuan Wang, Fengkai Lang, Hongtao Shi, and Nanshan Zheng. Cfformer: A cross-fusion transformer framework for the semantic segmentation of multisource remote sensing images. *IEEE Transactions on Geoscience and Remote Sensing*, 63:1–17, 2025.

[76] Zixiang Zhao, Haowen Bai, Jiangshe Zhang, Yulun Zhang, Shuang Xu, Zudi Lin, Radu Timofte, and Luc Van Gool. Cddfuse: Correlation-driven dual-branch feature decomposition for multi-modality image fusion. In *Proceedings of the IEEE/CVF Conference on Computer Vision and Pattern Recognition (CVPR)*.

[77] Dongbo Zhou, Huan Wang, Shiyan Pang, Di Chen, Huang Yao, and Jie Yu. Uav-faenet: Frequency-aware and attention-enhanced network for remote sensing semantic segmentation of uav imagery. *IEEE Journal of Selected Topics in Applied*

Earth Observations and Remote Sensing, 18:19853–19868, 2025.