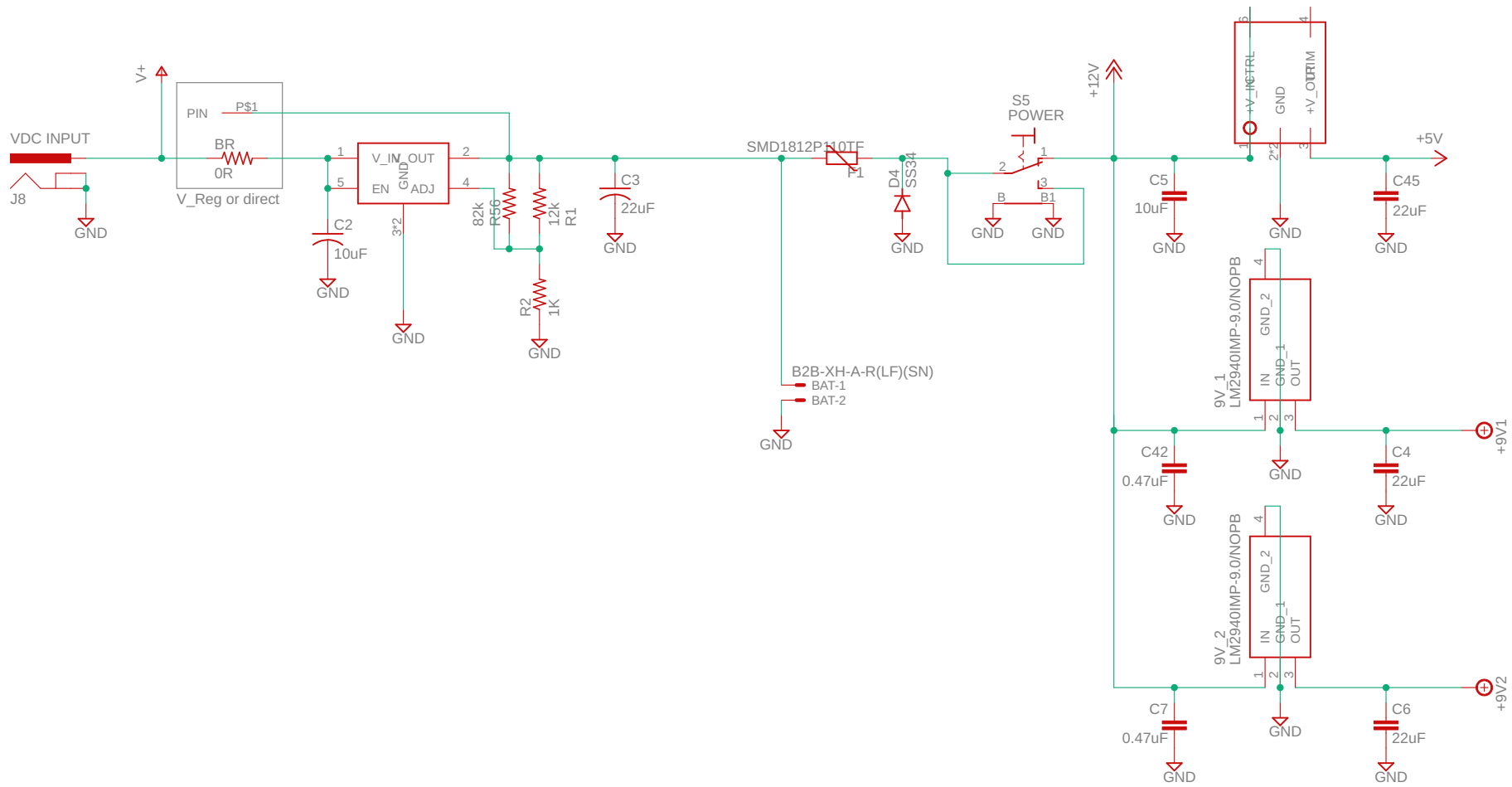

TITLE: mk312main_auto	
Document Number:	REV:
Date: 18.01.2024 19:20	Sheet: 1/4

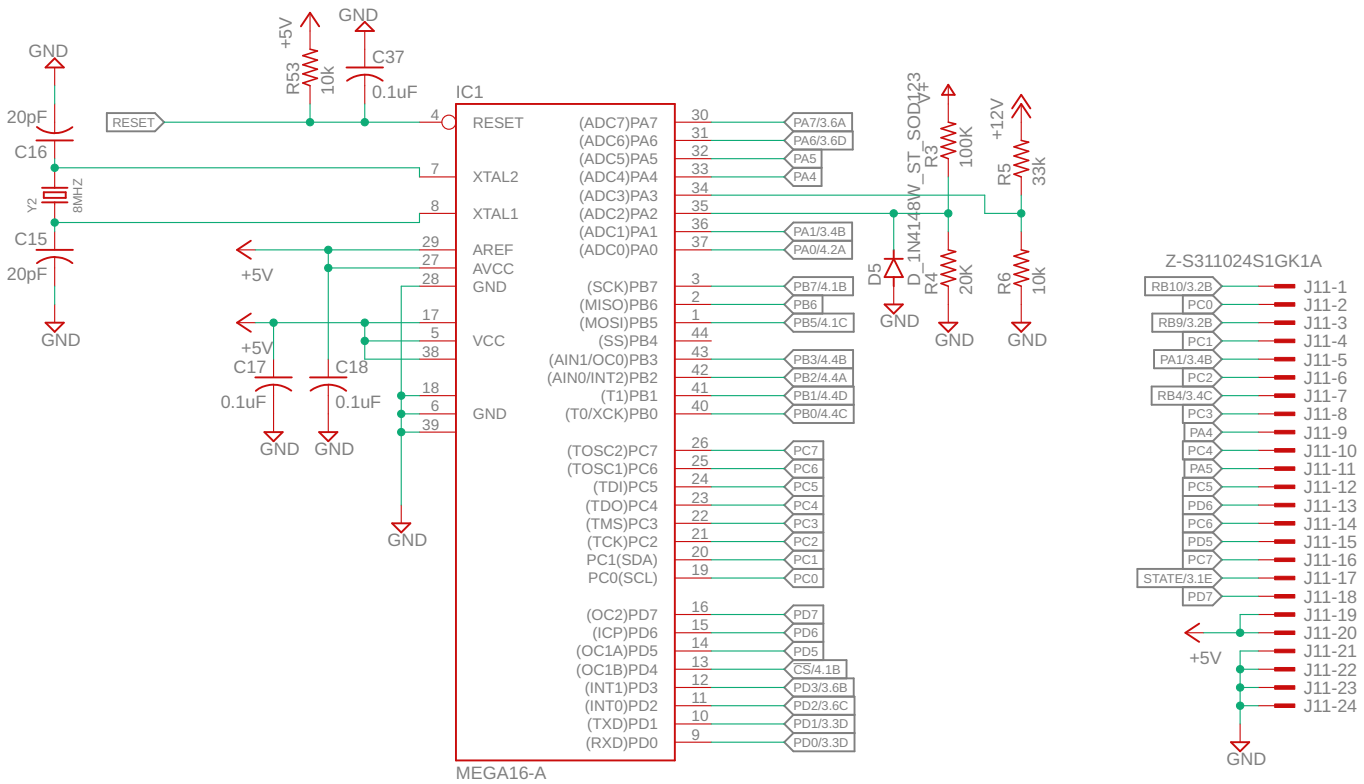

Notes:
Board to case mounting screws are #4 x 1/4" sheet metal

TITLE: mk312main_auto	
Document Number:	REV:
Date: 18.01.2024 19:20	Sheet: 2/4

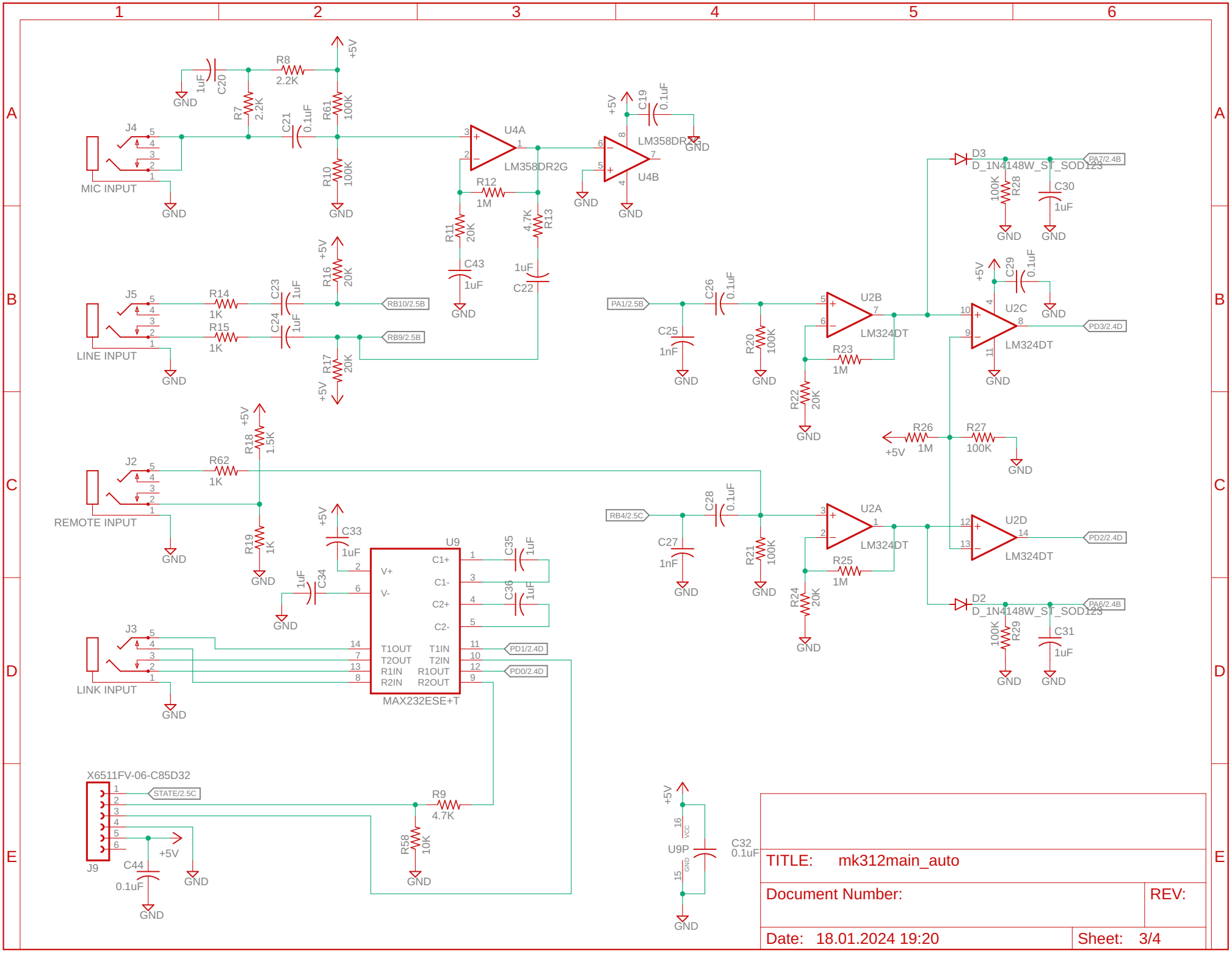
MIC INPUT
J4
LINE INPUT
J5
REMOTE INPUT
J2
LINK INPUT
J3
X6511FV-06-C85D32
J9
STATE/2.5C
U4A
LM358DR2G
U4B
LM358DR2G
U2A
U2B
U2C
U2D
LM324DT
D3
D2
D_1N4148W_ST_SOD123
PA7/2.4B
PA6/2.4B
PA1/2.5B
RB4/2.5C
RB10/2.5B
RB9/2.5B
PD3/2.4D
PD2/2.4D
PD1/2.4D
PD0/2.4D
U9
MAX232ESE+T
U9P
C32
0.1uF
+5V
GND
TITLE: mk312main_auto
Document Number:
REV:
Date: 18.01.2024 19:20
Sheet: 3/4

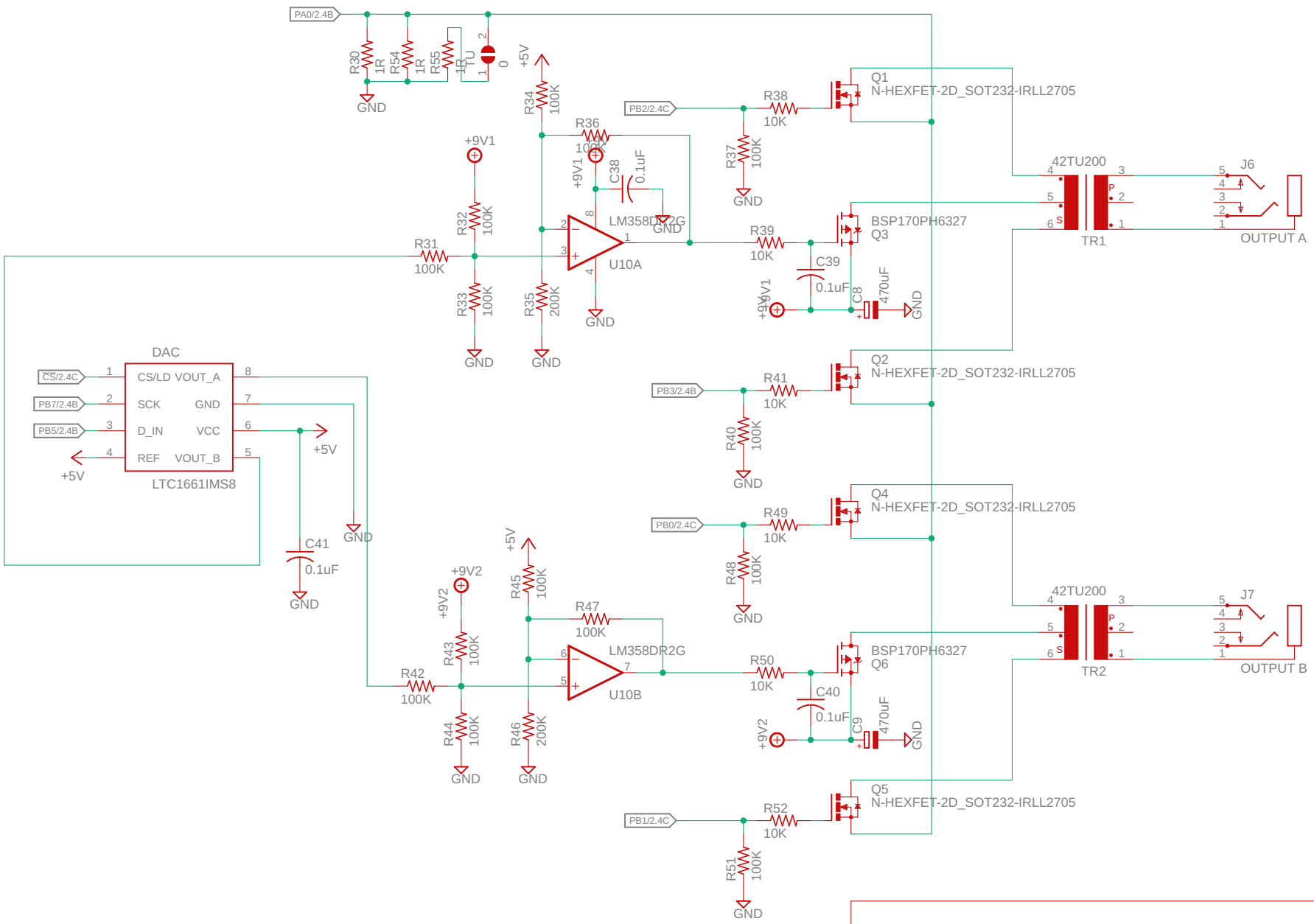

TITLE: mk312main_auto

Document Number:

REV:

Date: 18.01.2024 19:20

Sheet: 4/4