SOC ESP32

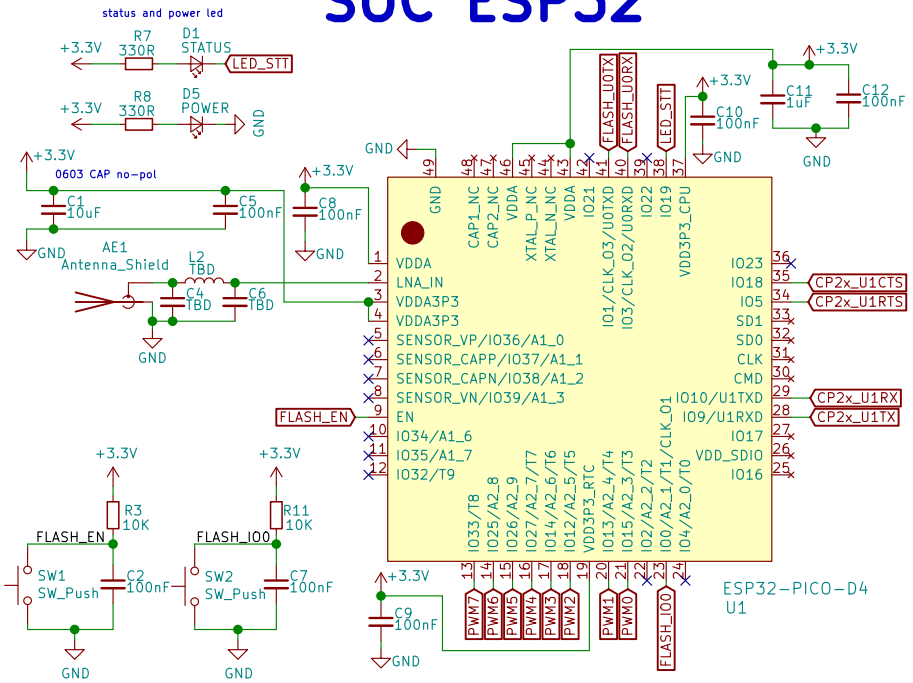

POWER

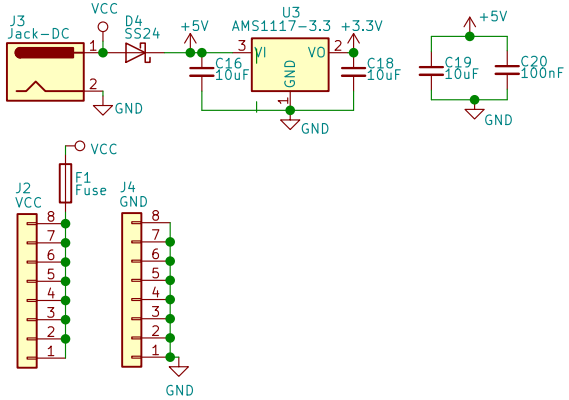

FLASH

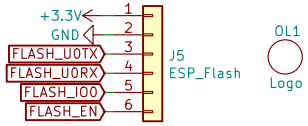

LEVEL TRANSFER

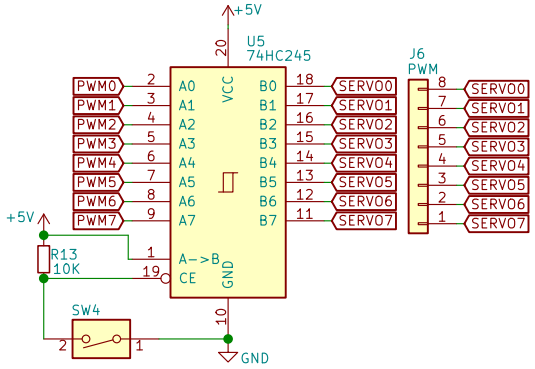

UART to USB

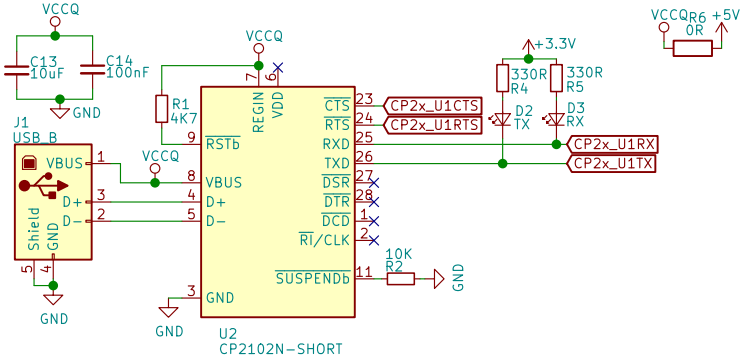

Sheet: /
File: driver-servo-esp32.sch

Title: Driver Servo ESP32PICO

Size: A4	Date: 2019-04-21	Rev: Ver1.0
KiCad E.D.A. kicad 5.1.4-e60b26684ubuntu18.04.1		Id: 1/1