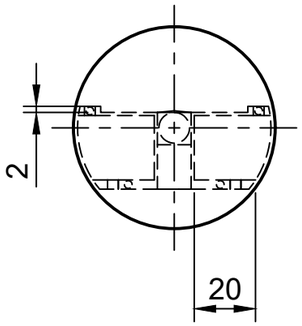


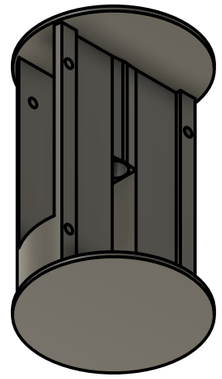

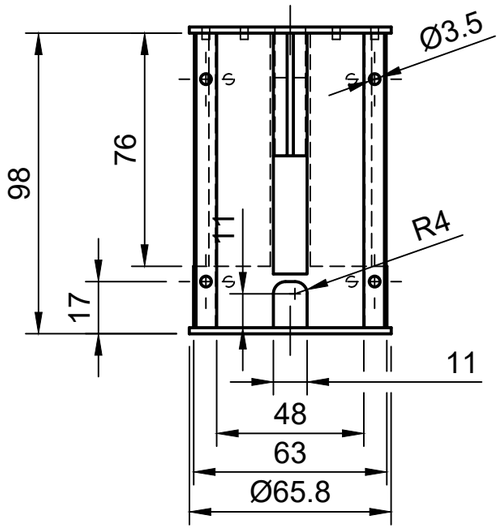


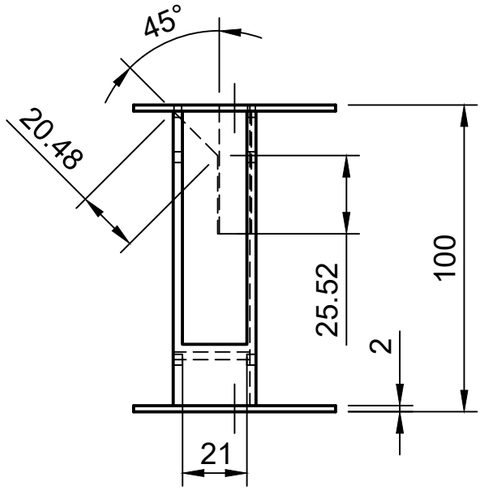


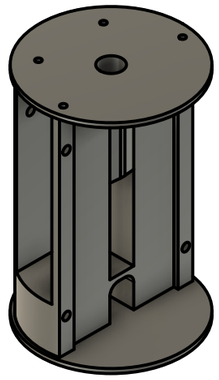

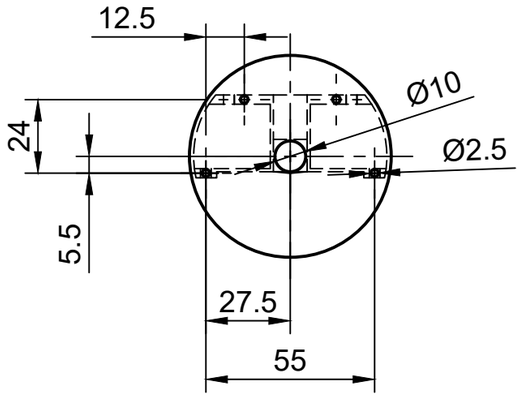


| Dept. | Technical reference | Created by | | Approved by | |
|---|---|---|---|---|---|
| Volatus | - | Jan Król | 17.01.2026 | Filip Matwijczyk | 17.01.2025 |
| | | Document type | | Document status | |
| | | DWG | | DONE | |
| | | Title | | DWG No. | |
| | | CS baza | | 2 | |
| | | | | Rev. | Date of issue | Sheet |
| | | | | 0 | 17.01.2026 | 1/1 |