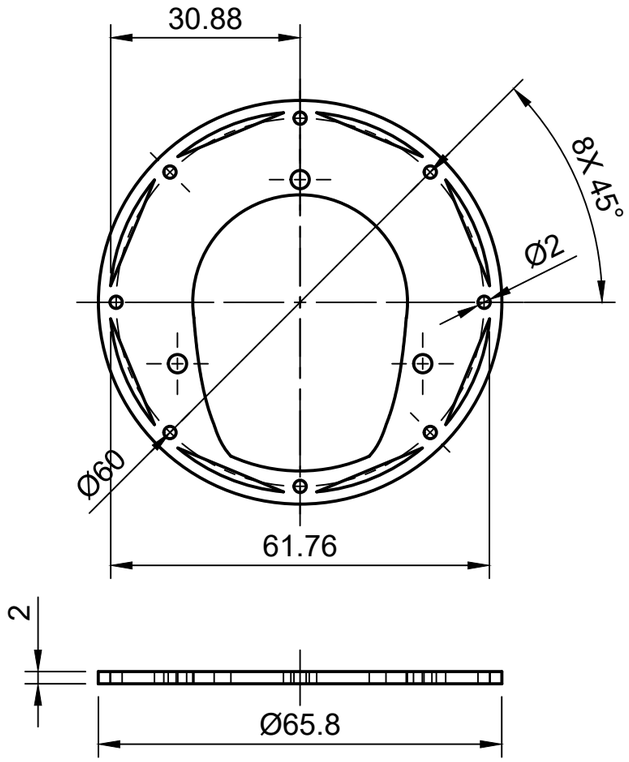

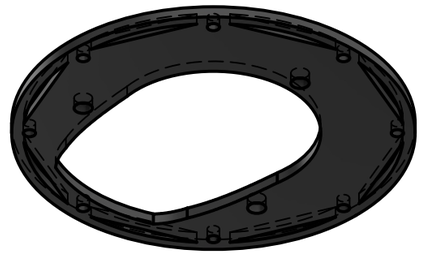

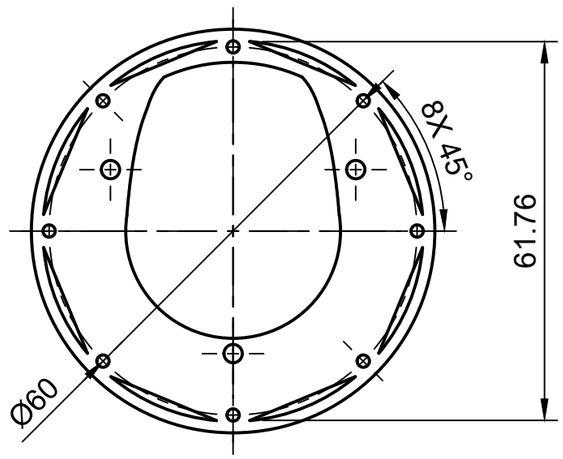

Dept.	Technical reference	Created by	Approved by
Volatus	-	Jan Król 20.03.2026	Filip Matwijczyk 07.02.2026
		Document type: DWG	Document status: DONE
		Title: Parachute holder	DWG No.: 5
			Rev.: 2 · Date of issue: 07.02.2026 · Sheet: 1/1