K9 Magstripe & 2D Barcode Reader

Mag Card 2DW

Fingerprint Module Available

Part# K9-MAG-2DW

K9 MAG-2DW is the Ideal Multi-Functional Reader to help you Read Magstripe cards and 1D, 2D barcodes.

No need to purchase more than one reader, the K9-MAG-2DW will help your organization to save money. With the Built in Flash Upgrade option, your hardware will always be up to date.

Typical Application:

- **Driver's License**
- **Health Cards**
- **Membership IDs**

Barcode Reading

Unlike any other reader on the market today, The K9 offers diversity and ease of use thru its innovative design. The 2D barcode and Magstripe reader are easily adapted to all RMS & EMS systems. 2 & 3 Factor authentication is also possible with the optional RFID, IC Chip Card and Biometric Fringerprint readers available on the K9. No need to stock different models, The K9 is Modular and Optional features can be added at a later date to meet your budget needs.

Features & Benefits

- Cost Effective Solution with both Magnetic Stripes, 1D and 2D barcodes (Auto 2D Sensors & Manual 2D Trigger Button)
- Triple Track Reading (Selectable Tracks), Bi-directional Swiping
- Built-in Data Encryption Option with the MX5 High Speed 32 bit Processor: Triple DES, AES128, Advanced Security Features and Masked Data
- Specifically Designed to Meet PCI DSS Requirement
- ABA, ANSI, ISO, AAMVA, CADMV Compatible
- Audible and LED Good Read and Error Indicator
- Programmable Sound & LED On/Off
- Multitude of Flash Upgradable Firmware: USB-KB, USB-RS (serial) USB-HID, USB-Custom
- Auto Caps Lock Detection, Upper Case or Lower Case Option
- Built-in Boot Load Function for Easy Firmware Upgrade
- QuickSet® Barcode & Magstripe setup card for Ease of Custom Settings and hardware deployment
- Optional RFID HF, RFID DF, IC Smart Card and Fingerprint Avail
- Optional Gooseneck Cable mount available
- No Drivers required to be installed (Plug & Play)
- Two Year Warranty

Magstripe Reading

Specifications:

Optional Gooseneck Cable mount

Optional RFID HF / DF

Optional IC Smart Card

K9 Barcode Reader Specification:	
Supported 1D Symbologies	Code128, EAN-13, EAN-8, Code39, UPC-A, UPC-E, Codabar, , Interleaved 2 of 5, ISBN/ISSN, Code 93, GS1 Databar, (Selectable Type)
Support 2D Symbologies	PDF417, Micro PDF417, QR Code, Micro QR Code, DataMatrix, Aztec,Maxicode, Codablock A & F (Selectable Type)
2D Image Sensor	CMOS 1.2 Megapixels (1280x 960) Gray Scale
2D Camera Resolution	960x640
Connector	USB Type A
Light Source	LED (617.5 nm – 633.5 nm)
Depth of Scan Shield	25 mm – 210 mm (will vary depending on size of barcode)
Cable Length	6 ft (180cm) or, 5ft (150cm) with Gooseneck Mount
Dimension (LxWxH)	103x90x45 mm
Weight	1 75g
Supported Standard	ABA, ANSI, ISO,AAMVA, CADMV
Communications	Selectable KB, VRS, HID Report, CCID (Selectable output for each module)
Power	Via USB port
Current mA	350 mA - 425 mA
Operating Temp.	- 20 C to 55 C
Humidity	10% - 90% relative humidity
Quick Set® Barcode & Magstripe	Yes, Customizable
Set-up Utility	Yes
Flash Memory Update	Yes
Boot Load Flash Upgradable Memory	Yes
Selectable Tracks	Yes (Separate Track selection for both ISO & AAMVA)
Selectable Available Tracks	1, 2, 3
Track Swipe Rates	2 : 125 ips at 75 bpi 1, 3: 60 ips at 210 bpi
Head Life	Over 1,000,000 passes
Programmable Sound & LED On/Off	Yes
Programmable Carriage Return	Yes (For both 2D & Magstripe)
Programmable Inter character Delay	Fixed
Programmable SS/ES Selectable Char.	Yes (For both 2D & Magstripe)
Parity and LRC Data Checking	Built-in, audible and LED good read and error indicator
Camera Certifications	CE, FCC, UL, RoHS,ICES-003
Support Operating Systems	Win 11 / 10 / 7, Win 2008 , Unix, Linux, IOS
Warranty	2 years

Dimension View:

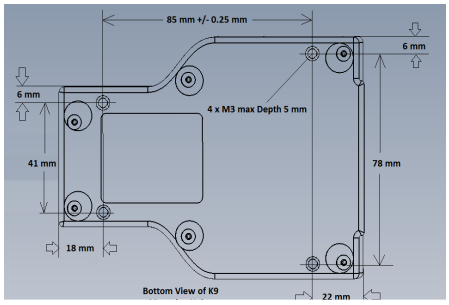

POSH MFG LTD
Canada
1-888-282-7674
www.poshmfg.com
sales@poshmfg.com

Specifications subject to change without notice

Fingerprint Specification:

Fingerprint Module	**TCETC1FF022**
Sensor Coating	FIPS 201 (gold coating)
Power	3.3 v, Powered by Device Fingerprint is installed on
Current	100 mA typical current used by Fingerprint device only
Fingerprint Image	2.8 x 18.0 mm (256 x 360 pixels) 508 dpi, 8-bit grayscale
Dimensions	23 mm x 35 mm x 4.1 mm
Interface	USB is internally Connected via 12 pin Flex cable
Humidity / Temp.	5% - 93% relative humidity , -30C to 70C
ESD	IEC 61000 - 4.2 level 4, +/- 15KV air, +/- 8KV contact
Certifications	FIPS 201 PIV Certified
Ingress Protection	IP65-rated top surface sealed against dust and liquid* (Fingerprint Module Only not device)
Storage	Can store up to approximately 100 user templates
Software	Includes broad software support from leading algorithm providers, ISV's and system integrators, Supports WSQ and JPEG2000 compression with the appropriate Software Development Kit.
Operating System	OS: Windows® 7, 8 and 10, Win CE, Linux®
Warranty	1 year

POSH MFG LTD
Canada
1-888-282-7674
www.poshmfg.com
sales@poshmfg.com

Specifications subject to change without notice