K9Jr 2D Barcode Reader

Fingerprint Module Available

Optional RFID HF / DF

Optional IC Smart Card

Part# K9Jr-2DW

K9Jr 2DW is the Ideal Multi-Functional Reader to help you Read 1D and 2D barcodes.

No need to purchase more than one reader, the K9Jr-2DW will help your organization to save money. With the Built in Flash Upgrade option, your hardware will always be up to date.

Typical Application:

- **Driver's License**
- **Health Cards**
- **Membership IDs**

Unlike any other reader on the market today, The K9Jr offers diversity and ease of use thru its innovative design. The 2D barcode reader is easily adapted to all RMS & EMS systems. 2 & 3 Factor authentication is also possible with the optional RFID, IC Chip Card and Biometric Fringerprint readers available on the K9Jr. No need to stock different models, The K9Jr is Modular and Optional features can be added at a later date to meet your budget needs.

Features & Benefits

- Cost Effective Solution with 1D and 2D barcodes (Auto 2D Sensors & Manual 2D Trigger Button)
- Built-in Data Encryption Option with the MX5 High Speed 32 bit Processor: Triple DES, AES128, Advanced Security Features and Masked Data
- AAMVA, CADMV Compatible
- Audible and LED Good Read and Error Indicator
- Programmable Sound & LED On/Off
- Auto Caps Lock Detection, Upper Case or Lower Case Option
- Built-in Boot Load Function for Easy Firmware Upgrade
- QuickSet® Barcode for Ease of Custom Settings and hardware deployment
- Optional RFID HF, RFID DF, IC Smart Card and Fingerprint Avail
- Optional Gooseneck Cable mount available
- Optional Overhead ID Card holding Kit
- No Drivers required to be installed (Plug & Play)
- Two Year Warranty

Specifications:

Optional Gooseneck Cable mount

Barcode Reading

K9Jr Barcode Reader Specification:	
Supported 1D Symbologies	Code128, EAN-13, EAN-8, Code39, UPC-A, UPC-E, Codabar, , Interleaved 2 of 5, ISBN/ISSN, Code 93, GS1 Databar , (Selectable Type)
Support 2D Symbologies	PDF417, Micro PDF417, QR Code, Micro QR Code, DataMatrix, Aztec,Maxicode, Codablock A & F, (Selectable Type)
2D Image Sensor	CMOS 1.2 Megapixels (1280x 960) Gray Scale
2D Camera Resolution	960x640
Connector	USB Type A
Light Source	LED (617.5 nm – 633.5 nm)
Depth of Scan Shield	25 mm – 210 mm (will vary depending on size of barcode)
Cable Length	6 ft (180cm) or, 5ft (150cm) with Gooseneck Mount
Dimension (LxWxH)	130x50x45 mm
Weight	1 55g
Supported Standard	AAMVA, CADMV
Communications	Selectable KB, VRS, HID Report, CCID (Selectable output for each module)
Power	Via USB port
Current mA	350 mA - 425 mA
Operating Temp.	- 20 C to 55 C
Humidity	10% - 90% relative humidity
Quick Set® Barcode & Magstripe	Yes, Customizable
Set-up Utility	Yes
Flash Memory Update	Yes
Boot Load Flash Upgradable Memory	Yes
Programmable Sound & LED On/Off	Yes
Programmable Carriage Return	Yes
Programmable Inter character Delay	Fixed
Programmable SS/ES Selectable Char.	Yes
Parity and LRC Data Checking	Built-in, audible and LED good read and error indicator
Camera Certifications	CE, FCC, UL, RoHS,ICES-003
Support Operating Systems	Win 11 / 10 / 7, Win 2008 , Unix, Linux, IOS
Warranty	2 years

Dimension View:

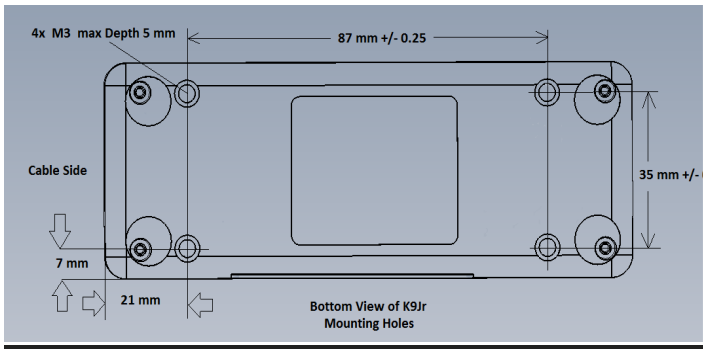

POSH MFG LTD
Canada
1-888-282-7674
www.poshmfg.com
sales@poshmfg.com

Fingerprint Specification:

Fingerprint Module	**TCETC1FF022**
Sensor Coating	FIPS 201 (gold coating)
Power	3.3 v, Powered by Device Fingerprint is installed on
Current	100 mA typical current used by Fingerprint device only
Fingerprint Image	2.8 x 18.0 mm (256 x 360 pixels) 508 dpi, 8-bit grayscale
Dimensions	23 mm x 35 mm x 4.1 mm
Interface	USB is internally Connected via 12 pin Flex cable
Humidity / Temp.	5% - 93% relative humidity , -30C to 70C
ESD	IEC 61000 - 4.2 level 4, +/- 15KV air, +/- 8KV contact
Certifications	FIPS 201 PIV Certified
Ingress Protection	IP65-rated top surface sealed against dust and liquid* (Fingerprint Module Only not device)
Storage	Can store up to approximately 100 user templates
Software	Includes broad software support from leading algorithm providers, ISV's and system integrators, Supports WSQ and JPEG2000 compression with the appropriate Software Development Kit.
Operating System	OS: Windows® 7, 8 and 10, Win CE, Linux®
Warranty	1 year

POSH MFG LTD
Canada
1-888-282-7674
www.poshmfg.com
sales@poshmfg.com

Specifications subject to change without notice