MX53 Classic / Lite Magstripe Reader

Mag Card

Fingerprint Module Available

Part# MX53-CBP-USB-CLS

MX53 is a three track Universal Magstripe Card Reader with selectable features and is flash upgradeable to meet all your card solution needs. Equipped with a multitude of configuration and customization options, it is truly the most versatile reader available in today's market.

Unlike any other reader on the market today, you will not need to stock different models to support USB Serial, Keyboard, HID or Custom applications. Just plug in the MX53, Configure your settings using MX5 Utility and your MX53 reader is ready to meet you needs.

Featuring the intuitive set-up utility, this eliminates complicated DIP switches, jumpers or cryptic codes. It allows the users to select from over 35 feature-rich functions, which can be customized to any application specifications. The MX53-USB is also available with Read / Write RFID or IC Smart Cards and / or Fingerprint reader Module all in one compact reader.

RFID Available

Features & Benefits

- Versatile to Many Applications with Over 35 configurable Feature-rich functions
- Triple Track Reading (Selectable Tracks), Bi-directional Swiping
- Built-in Data Encryption Option with the MX5 High Speed 32 bit Processor: Triple DES, AES128, Advanced Security Features and Masked Data available
- Specifically Designed to Meet PCI DSS Requirement
- Available with Read / Write RFID or IC Smart Cards and / or Fingerprint module
- ABA, ANSI, ISO, AAMVA, CADMV Compatible
- Audible and LED Good Read and Error Indicator
- Programmable Sound & LED On/Off
- Flash Upgradable Firmware with Selectable HID KB, VRS (serial), USB-HID or Combo communication settings
- Auto Caps Lock Detection, Upper Case or Lower Case Option
- Built-in Boot Load Function for Easy Firmware Upgrade
- QuickSet® using Default Setup Card for Ease of Custom Settings and hardware deployment
- Two Year Warranty

IC Smart Chip Available

Specifications:

Built-in Magnetic Card Decoder	Yes
Supported Standard	ABA, ANSI, ISO,AAMVA, CADMV
Communications	Selectable HID KB, VRS (serial), USB-HID or Combo communication settings
Power	Via USB port
Current mA	35 mA
Connectors	USB Type A (Default) Also Available in PS2 Mini DIN6/DIN 5, RS232 DB9F using Cable Converter option
Cable Length	6 Ft (180 cm)(Default) also Available in 2 Ft (60 cm) and 15 Ft (450 cm)
Dimensions (LxWxH)	100 x 32 x 32 mm
Total Weight	130 g
Operating Temp.	- 20 C to 55 C
Humidity	10% - 90% relative humidity
Quick Set® Factory Default Card	Yes One step Default setup card, Customizable
Boot Load Flash Upgradable Memory	Yes
Selectable Tracks	Yes (Separate Track selection for both ISO and AAMVA)
Available Tracks	1, 2, 3 (Selectable Tracks)
Track Swipe Rates	2 : 125 ips at 75 bpi 1, 3: 60 ips at 210 bpi
Head Life	Over 1,000,000 passes
Programmable Sound & LED On/Off	Yes
Programmable Carriage Return	Yes (Each Track & Group Setting)
Programmable Inter character Delay	Fixed
Programmable SS/ES Selectable Char.	Yes (Each Track & Group Setting)
Parity and LRC Data Checking	Built-in, audible and LED good read and error indicator
Certifications	CE, FCC, UL, RoHS
Also Available with	Smart IC Chip Card, LF EM RFID, HF RFID, Fingerprint options
Support Operating Systems	Win 11 / 10 / 7, Win 2008 , Unix, Linux, IOS
Warranty	2 years

USB to RS232 Converter Cable Available

Dimension View:

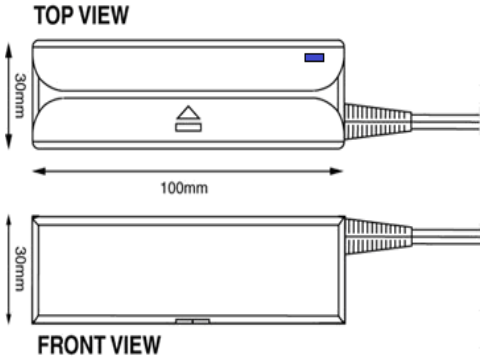

Cable Option Available:

POSH MFG LTD
Canada
1-888-282-7674
www.poshmfg.com
sales@poshmfg.com