POS708-USB Cash Drawer Alarm

Dual Cash Drawer Splitter

Optional Paper Sensor Part# POS-PSEN-708

Part# POS708-USB

POS708-USB is a Dual Cash Drawer triger and Alarm or dual Paper Receipt Alarm with the use of a POS-PSen-708. Can support up to two Printers with the POS-Psen-708 as a paper receipt printer alarm. Helps to Prevents Till Tapping and Theft. Easy to install. Plug and Play.

Typical Application:

- Retail Stores
- Restaurants
- Bars
- Clubs
- Hotels

Unlike any other cash drawer alarm on the market today, The POS708 is the only device that can be used as a Cash Drawer Alarm and support two Cash Drawers or one Cash Drawer and one Printer Paper Receipt Sensor alarm (Paper Receipt alarm is using the Optional POS-PSen-708). Using the DIP Switches you can configure the delay time before the Alarm will sound a buzzer for your personal requirements.

Features & Benefits

- Helps Prevent Till -tapping and Theft
- Alarm and LED flashing when Cash Drawer is Left Open
- 24V 1 Amp External Power Supply included
- Functions with all Star, Citizen, IBM and other compatible Receipt Printers Drawer Triger commands to the USB VRS port
- Can support one POS-PSen-708 and one Cash Drawer or two POS-Psen-708 (POS-PSen-708 are Optional devices required for the Paper Receipt printer Alarm option)
- Easy to Install, no tools needed, Velcro strip provided for easy mounting
- The Paper Receipt printer alarm will work with virtually any printers
- Can be used with ANY Printers (Using optional POS-PSEN-708)
- One Year Warranty

Specification:

POS 708	
Selectable modes using Dip Switches	Cash Drawer Alarm (Until Drawer is closed) Cash Drawer Alarm (Until Drawer is closed or 1 Min. On) Paper Sensor Alarm (Until Receipt is Removed) Paper Sensor Alarm (Until Receipt is Removed or 1 Min. On) Selectable Delay times before alarm will sound when Drawer is open or Paper is Sensed (15 -40 sec)
Power	5V supplied from USB port., 24 V, 1 Amp power Adaptor for Cash Drawer is included
Current	10 - 100 mA typical current used by device only (POS 708 & POS-PSen 130 – 200 mA) 5 V
Drawer Connectors	2 x RJ12 , Drawer 1 & Drawer 2 Normally Open N/O cash Drawer(s) only with RJ12 connections
Dimensions	POS 708 80 x 45 x 28.5 mm (WxDxH) 110 gm, POS-PSen (35x59x16 mm) 25 gm
USB Cable Length	POS 708: 180 cm (2 / **6** /15 Feet) POS-Psen-708: 30 cm (1 foot) USB type A cable 6ft Default cable
Humidity / Temp.	10% - 90% relative humidity , -20C to 55C
POS-Psen Supported	Only use Part # POS-PSEN-708
Piezo Electric Buzzer	4.5 kHz @ 90 dBA at 30 cm
Drawer Triggers	The Drawers are triggered by the Chr 7 and Chr 19 sent to the USB VRS port of the POS708
Drawer Alarm	Alarm will sound if either drawers are left open manually or by the system trigger. Cash Drawer must have an RJ12 cable with a drawer normally open switch for the Drawer Alarm to function
Paper Receipt Alarm	The paper receipt printer alarm is triggered by the presence of white paper in front of the sensor
Operating System	Not dependent on any operating system or software
Warranty	1 year

Dimension View:

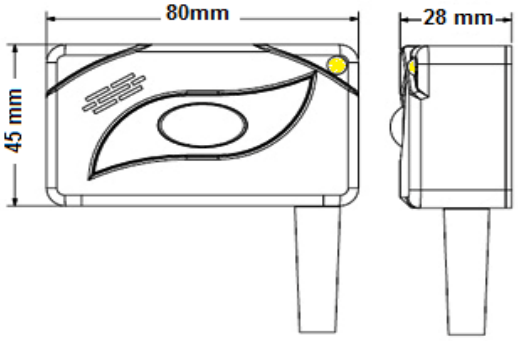

POSH MFG LTD
Canada
1-888-282-7674
www.poshmfg.com
sales@poshmfg.com